DEPARTMENT OF THE ARMY TECHNICAL MANUAL

DEPARTMENT OF THE AIR FORCE TECHNICAL ORDER

TM 11-2248
TO 31W4-2FGC-201

TELETYPEWRITER SETS AN/FGC-38, AN/FGC-38X AND AN/FGC-39

DEPARTMENTS OF THE ARMY AND THE AIR FORCE

FEBRUARY 1957

TM 11-2248/TO 31W4-2FGC-201

TELETYPEWRITER SETS AN/FGC-38, AN/FGC-38X AND AN/FGC-39

United States Government Printing Office
Washington : 1957

DEPARTMENTS OF THE ARMY AND
THE AIR FORCE
WASHINGTON 25, D. C., *8 February 1957*

TM 11–2248/TO 31W4–2FGC–201 is published for the use of all concerned. This is a republication of Department of the Navy publication NAVSHIPS 92378.

[AG 413.48 (10 Jan 57)]

BY ORDER OF THE SECRETARIES OF THE ARMY AND THE AIR FORCE:

MAXWELL D. TAYLOR,
General, United States Army,
Chief of Staff.

OFFICIAL:
HERBERT M. JONES,
Major General, United States Army,
The Adjutant General.

N. F. TWINING,
Chief of Staff, United States Air Force.

OFFICIAL:
CHARLES M. McDERMOTT,
Colonel, United States Air Force,
Acting Air Adjutant General.

DISTRIBUTION:
Active Army:

CNGB	MDW	POE (OS)	11–7C
ASA	Armies	Trans Terminal Comd	11–16C
Tec Svc, DA	Corps	Army Terminals	11–57C
Tec Svc Bd	Ft & Cp	OS Sup Agencies	11–127R
Hq CONARC	Sp Wpn Comd	Army Elct PG	11–128C
CONARC Bd	Army Cml Cen	Sig Fld Maint Shops	11–500R
CONARC Bd Test Sec	Gen & Br Svc Sch	Sig Lab	11–557C
Army AA Comd	Gen Depots	ACS	11–587R
OS Maj Comd	Sig Sec, Gen Depots	Mil Dist	11–592R
OS Base Comd	Sig Depots	Units organized under following TOE's:	11–597R
Log Comd	US Army Tng Cen		

NG: State AG; units—same as Active Army.
USAR: None.
For explanation of abbreviations used, see SR 320–50–1.

INSTRUCTION BOOK

for

TELETYPEWRITER SETS AN/FGC-38, AN/FGC-38X, and AN/FGC-39

SECTION 1

GENERAL DESCRIPTION

INSTRUCTION BOOK

for

TELETYPEWRITER SETS AN/FGC-3B, AN/FGC-3BX, and AN/FGC-3S

SECTION I

GENERAL DESCRIPTION

TABLE OF CONTENTS

Paragraph		Page
1.	Scope of Instruction Book	1-1
2.	Purpose of Teletypewriter Sets AN/FGC-38, AN/FGC-38X, and AN/FGC-39	1-1
3.	Basic Principles of Teletypewriter Sets AN/FGC-38, AN/FGC-38X, and AN/FGC-39	1-1
a.	General	1-1
b.	Receiver Group	1-1
c.	Transmitter Group	1-1
d.	Monitor Group	1-5
4.	Description of Teletypewriter Sets AN/FGC-38, AN/FGC-38X, and AN/FGC-39	1-5
a.	Cabinet, Electrical Equipment CY-1523/FGC (Receiving)	1-5
b.	Cabinet, Electrical Equipment CY-1524/FGC (Transmitting)	1-5
c.	Cabinet, Electrical Equipment CY-1522/FGC (Monitoring)	1-5
d.	Teletypewriter Reperforator (Receiving)	1-5
	(1) General Description	1-5
	(2) Differences between Units	1-6
e.	Distributor-Transmitter Units	1-6
	(1) Teletypewriter Distributor-Transmitter (Message)	1-6
	(2) Teletypewriter Distributor-Transmitter (Numbering)	1-7
f.	Distributor-Transmitter Bases	1-8
	(1) Distributor-Transmitter Base (Numbering)	1-8
	(2) Distributor-Transmitter Base (Message)	1-8
g.	Teletypewriter Reperforators (Monitoring)	1-9
	(1) TT-164/FGC-38	1-9
	(2) TT-165/FGC-38X	1-9
	(3) TT-166/FGC-39	1-9
h.	Motor Driven Tape Reeling Machine RL-173/FGC	1-9
i.	Time Stamp MX-1527/U	1-10
	(1) General Description	1-10
	(2) Difference between Units	1-11
j.	Power Supply PP-987/U	1-11
k.	Control Panel SB-357/FGC	1-11
l.	Control Panel SB-358/FGC	1-11
m.	Cable Assemblies CX-2648/FGC, CX-2649/FGC, and CX-2650/FGC	1-11
5.	Reference Data	1-13
6.	Equipment Similarities	1-20

LIST OF ILLUSTRATIONS

Figure	Title	Page
1-1	Teletypewriter Sets AN/FGC-38, AN/FGC-38X, and AN/FGC-39	1-0
1-2	Electrical Equipment Cabinet CY-1523/FGC (Receiving), Oblique View	1-2
1-3	Electrical Equipment Cabinet CY-1524/FGC (Transmitting), Oblique View	1-3
1-4	Electrical Equipment Cabinet CY-1522/FGC (Monitoring), Oblique View	1-4
1-5	Teletypewriter Reperforator (Receiving), Oblique View	1-6
1-6	Distributor-Transmitter (Message), Oblique View	1-7
1-7	Distributor-Transmitter (Numbering), Oblique View	1-8
1-8	Distributor-Transmitter Base (Numbering), Oblique View	1-9
1-9	Distributor-Transmitter Base (Message), Oblique View	1-10
1-10	Teletypewriter Reperforator (Monitoring), Oblique View	1-11
1-11	Motor Driven Tape Reeling Machine RL-173/FGC, Left Side View	1-12
1-12	Time Stamp MX-1527/U, Oblique View	1-12
1-13	Power Supply PP-987/U, Front View	1-13
1-14	Control Panel SB-357/FGC, Rear View	1-14
1-15	Control Panel SB-358/FGC, Rear View	1-15
1-16	Cable Assemblies CX-2648/FGC, CX-2649/FGC, and CX-2650/FGC	1-16

LIST OF TABLES

Table	*Title*	*Page*
1-1	Equipment Supplied with Teletypewriter Set AN/FGC-38	1-17
1-2	Equipment Supplied with Teletypewriter Set AN/FGC-38X	1-17
1-3	Equipment Supplied with Teletypewriter Set AN/FGC-39	1-18
1-4	Shipping Data	1-19
1-5	Equipment Similarities of AN/FGC Series	1-20
1-6	Unit Similarities in AN/FGC Series Equipments	1-20

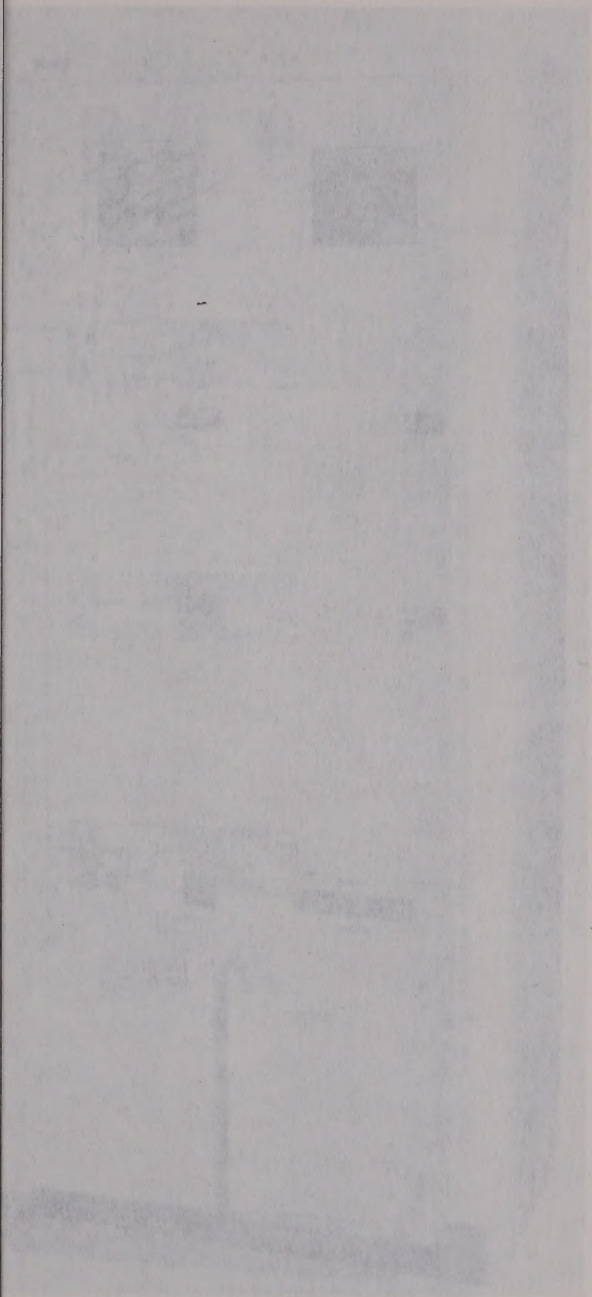

LIST OF TABLES

Table	*Title*	*Page*
1–1	Equipment Supplied with Teletypewriter Set AN/FGC-38	1–17
1–2	Equipment Supplied with Teletypewriter Set AN/FGC-38X	1–17
1–3	Equipment Supplied with Teletypewriter Set AN/FGC-39	1–18
1–4	Shipping Data	1–19
1–5	Equipment Similarities of AN/FGC Series	1–20
1–6	Unit Similarities in AN/FGC Series Equipments	1–20

NAVSHIPS 92378
AN/FGC-38, AN/FGC-38X, AN/FGC-39
NAVSHIPS 92378
AN/FGC-38, AN/FGC-38X, AN/FGC-39

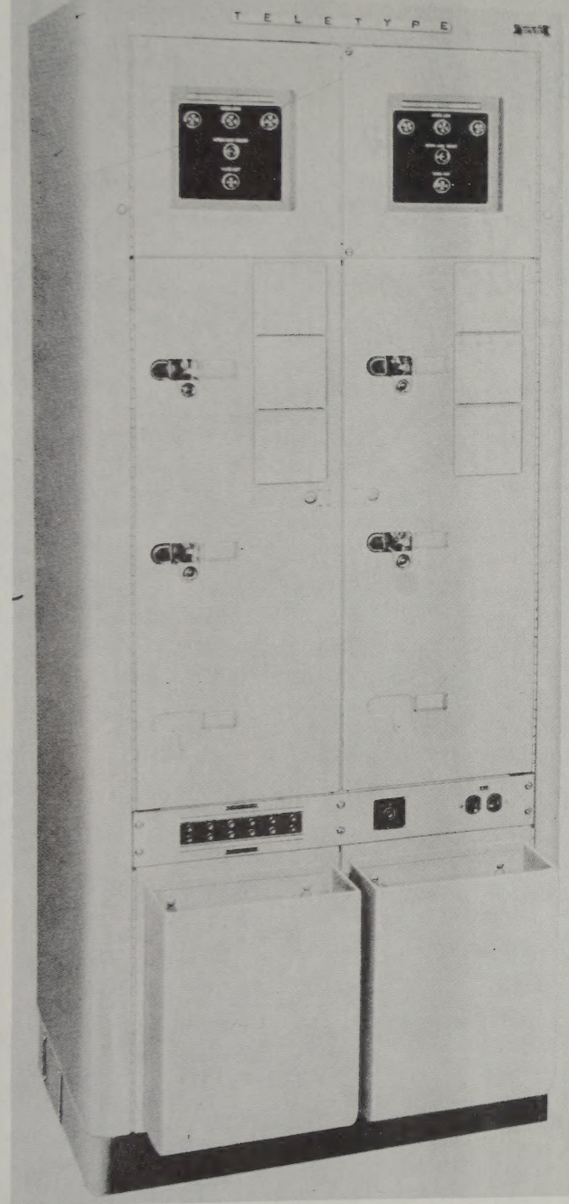

RECEIVER GROUP OA-616/FGC-38
OA-619/FGC-38X
OA-622/FGC-39

TRANSMITTER GROUP OA-615/FGC-38
OA-618/FGC-38X
OA-621/FGC-39

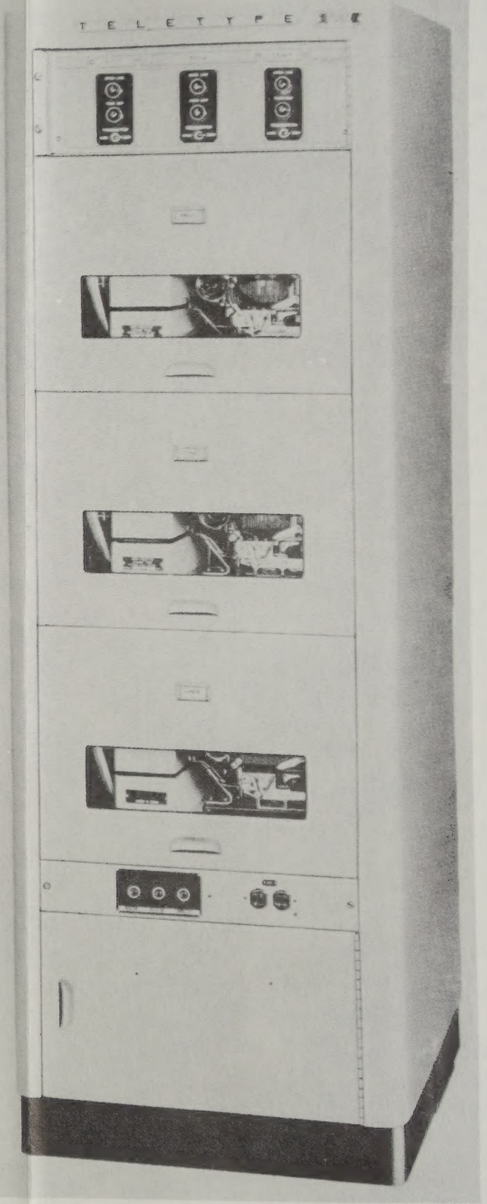

MONITOR GROUP OA-617/FGC-38
OA-620/FGC-38X
OA-623/FGC-39

Figure 1—1. Teletypesetter Sets AN/FGC-38, AN/FGC-38X, and AN/FGC-39

SECTION 1
GENERAL DESCRIPTION

1. SCOPE OF INSTRUCTION BOOK.

This instruction book describes Teletypewriter Sets AN/FGC-38, AN/FGC-38X, and AN/FGC-39 (see figure 1-1), and includes information concerning the installation, operation, and maintenance of the equipments.

2. PURPOSE OF TELETYPEWRITER SETS AN/FGC-38, AN/FGC-38X, AND AN/FGC-39.

a. Teletypewriter Sets AN/FGC-38, AN/FGC-38X, and AN/FGC-39 are each comprised essentially of three major groups; e.g., a Receiver Group OA-616/FGC-38, OA-619/FGC-38X, or OA-622/FGC-39, a Transmitter Group OA-615/FGC-38, OA-618/FGC-38X, or OA-621/FGC-39, and a Monitor Group OA-617/FGC-38, OA-620/FGC-38X or OA-623/FGC-39, each contained in a separate cabinet. These three groups make up one set. The set is used at a relay station to receive, transmit, and monitor telegraph messages. A typical station installation may consist of several sets.

b. The receiver groups OA-616/FGC-38 and OA-619/FGC-38X receive automatic telegraph signals at 60, at 75, or at 100 (experimental) words per minute from three incoming signal lines, convert the signals to perforated tape, and type the characters on the tape. Receiver group OA-622/FGC-39 receives automatic telegraph signals at 65 words per minute only.

c. The transmitter groups OA-615/FGC-38 and OA-618/FGC-38X transmit from perforated tape to three outgoing signal lines at 60, at 75, or at 100 (experimental) words per minute. Each transmitted message is numbered consecutively. Circuits in series with the distributor-transmitters provide monitoring. Transmitter group OA-621/FGC-39 transmits at 65 words per minute only.

d. The monitor group receives messages from the transmitter group and records each transmitted message on tape in the same manner as the receiver group. The time and date are stamped every minute on the message tape (except in the AN/FGC-38X) which is taken up on a reel for storage.

e. Teletypewriter Set AN/FGC-38 uses the 7.42 unit code and synchronous motors for all units; Teletypewriter Set AN/FGC-38X uses the 7.42 unit code and governed motors for all units; Teletypewriter Set AN/FGC-39 uses the 7.00 unit code and synchronous motors for all units.

3. BASIC PRINCIPLES OF TELETYPEWRITER SETS AN/FGC-38, AN/FGC-38X, AND AN/FGC-39.

a. GENERAL.—Each set consists of three groups: the Transmitter Group, the Receiver Group, and the Monitoring Group (see figure 1-1). Signal circuits for the receiver may be concentrated in a given KEY receiver cabinet to afford central circuit termination and distribution at one point of operation of associated groups. Transmitter groups may be similarly arranged.

b. RECEIVER GROUP.—This group comprises three reperforators with provisions for connection to three incoming lines. In addition, there is one spare reperforator. These units are housed in Electrical Equipment Cabinet CY-1523/FGC (Receiving). Provisions are made for operating on either polar or neutral signals. The reperforators perforate and type the tape as it is pulled from a reel through the unit and fed out the front of the cabinet. Receiver Group OA-616/FGC-38 is used in AN/FGC-38, Receiver Group OA-619/FGC-38X is used in AN/FGC-38X, and Receiver Group OA-622/FGC-39 is used in AN/FGC-39.

c. TRANSMITTER GROUP.—This group comprises six message distributor-transmitter units and three numbering distributor-transmitter units. A numbering distributor-transmitter and a pair of message distributor-transmitters (located one above the other and operating alternately in tandem) are connected to one of three outgoing lines. The distributor-transmitters accept manually inserted tape, automatically feed it through, convert the perforations to automatic telegraph signals, and distribute them sequentially on the signal line. The numbering distributor-transmitters transmit a number for each message prior to its transmission. Provisions are made at the rear of the cabinet to allow any transmitter group to be used as a KEY transmitter when multiple groups are used in an installation. All units of this group are housed in Electrical Equipment Cabinet CY-1524/FGC (Transmitting). Transmitter Group OA-615/FGC-38 is used in AN/FGC-38, Transmitter Group OA-618/FGC-38X is used in AN/FGC-38X, and Transmitter Group OA-621/FGC-39 is used in AN/FGC-39.

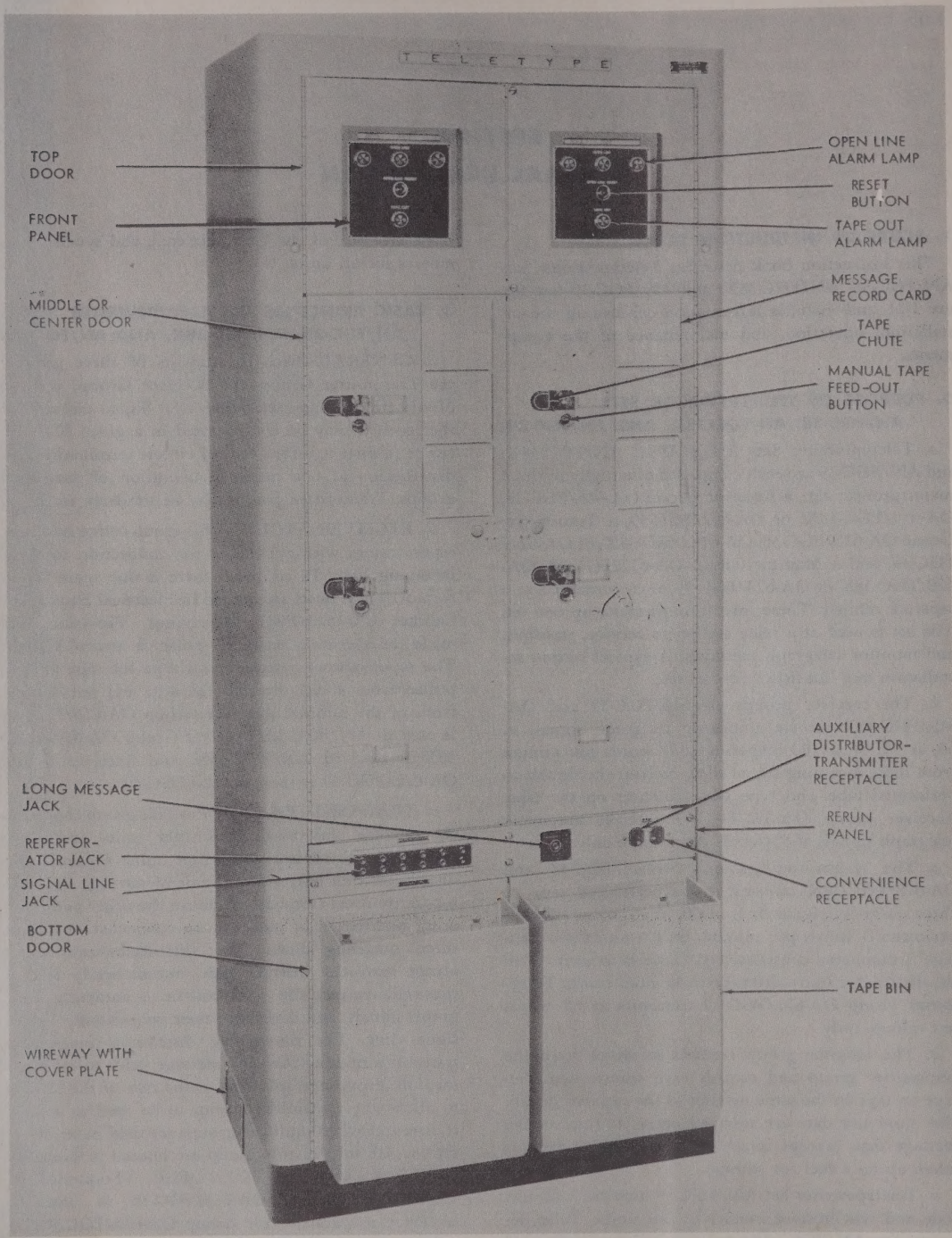

Figure 1—2. Electrical Equipment Cabinet CY-1523/FGC (Receiving), Oblique View

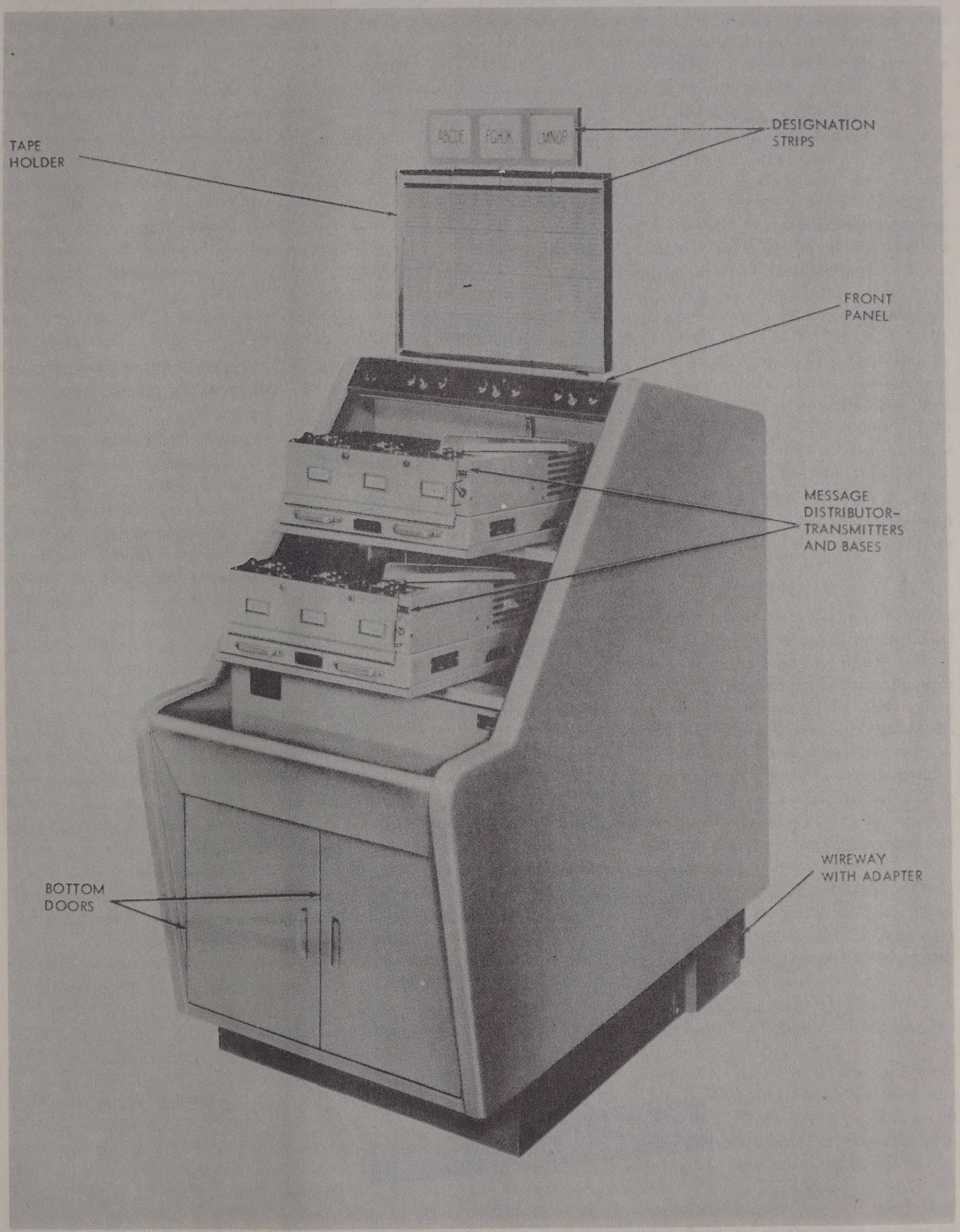

Figure 1–3. Electrical Equipment Cabinet CY-1524/FGC (Transmitting), Oblique View

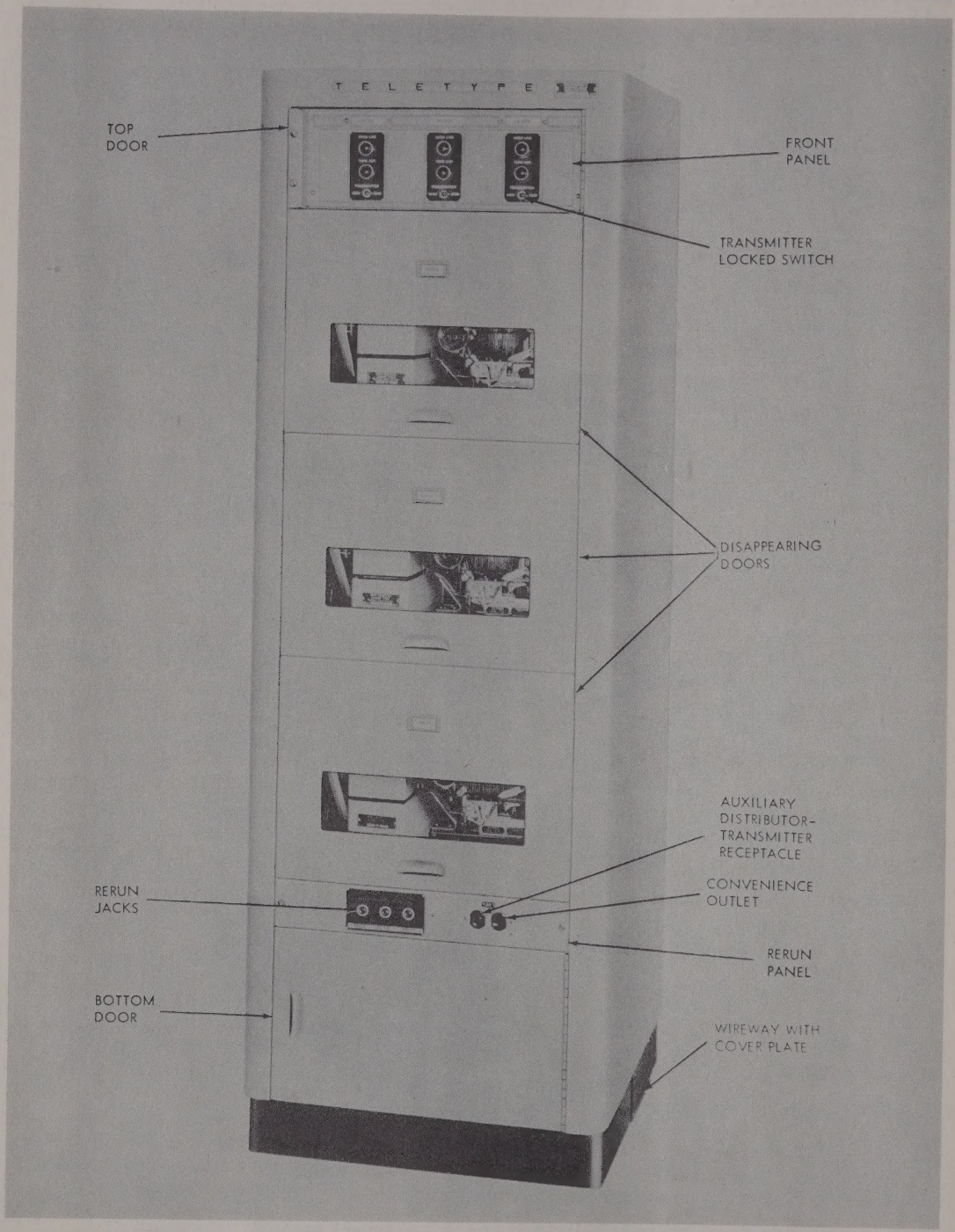

Figure 1–4. Electrical Equipment Cabinet CY-1522/FGC (Monitoring), Oblique View

d. MONITOR GROUP.—This group comprises three reperforators, operating independently of each other, which receive automatic telegraph signals from a given pair of distributor-transmitters and the associated numbering distributor-transmitter in the transmitter group. This group is equipped with a Motor Driven Tape Reeling Machine RL-173/FGC to take up and store the monitored tape. A Time Stamp MX-1527/U is included for each reperforator (except with AN/FGC-38X) to stamp the time and date on the tape every minute so long as transmission continues. All units of this group are housed in Electrical Equipment Cabinet CY-1522/FGC (Monitoring). Monitor Group OA-617/FGC-38 is used in AN/FGC-38, Monitor Group OA-620/FGC-38X is used in AN/FGC-38X, and Monitor Group OA-623/FGC-39 is used in AN/FGC-39.

4. DESCRIPTION OF TELETYPEWRITER SETS AN/FGC-38, AN/FGC-38X, AND AN/FGC-39.

a. CABINET, ELECTRICAL EQUIPMENT CY-1523/FGC (RECEIVING).—This cabinet houses four Teletypewriter Reperforators, four Control Panels SB-357/FGC, one Power Supply PP-987/U, patching frame, signal terminal block, wireway, and associated parts (see figure 1-2). The reperforators are mounted on sliding shelves with rotatable trays which may be pulled out from the front or rear, depending upon how the shelves and slides have been installed. Interconnection between the components of the receiving group is achieved by cables with plugs. The front of the cabinet has six doors hinged at the side, one pair enclosing the upper section, a second pair enclosing the shelf section, and the third pair enclosing the bottom section. Attached to the front of each bottom door is a tape bin to collect the perforated tape as it comes out of the reperforators. The two upper doors form the front panels. A corresponding rear panel is mounted at the top on the rear of the cabinet, the controls of which are wired in parallel with those on the front panels. Each panel contains OPEN LINE alarm lamps, RESET buttons, and TAPE OUT lamps. The receiver group cabinet is approximately 77⅜ inches x 33 inches x 24 inches, and weighs approximately 750 pounds including the components mounted in the cabinet.

b. CABINET, ELECTRICAL EQUIPMENT CY-1524/FGC (TRANSMITTING).—This cabinet contains two message Distributor-Transmitter Bases, six message Distributor-Transmitters, one numbering Distributor-Transmitter Base, three numbering Distributor-Transmitters, one Power Supply PP-987/U, three Control Panels SB-358/FGC, wiring, and associated parts (see figure 1-3). The front panel, located above the distributor-transmitters at the front of the cabinet, has a BUSY and OPEN LINE alarm lamp for each outgoing signal line, a RESET button, and a NUMBER-DELETE switch for each numbering distributor-transmitter. The cabinet measures approximately 67 inches x 27 inches x 43 inches including the Tape Holder MX-1569/FGC mounted on top of the cabinet, and weighs approximately 530 pounds including the components mounted in the cabinet.

c. CABINET, ELECTRICAL EQUIPMENT CY-1522/FGC (MONITORING).—This cabinet contains three Typing Reperforators, three Time Stamps MX-1527/U (except in AN/FGC-38X), and three Motor Driven Tape Reeling Machines RL-173/FGC (see figure 1-4). Each reperforator is mounted with one time stamp and one reeling machine on a sliding shelf. There is extra storage space for rolls of fresh tape in the bottom of the cabinet enclosed by a hinged door. The front panel is the hinged door at the top of the cabinet and contains an OPEN LINE lamp, a TAPE OUT lamp, and a TRANSMITTER NORMAL-LOCKED switch. The RERUN panel, located just above the bottom storage space, contains two power receptacles and three rerun jacks. The cabinet measures approximately 77⅜ inches x 27 inches x 24 inches, and weighs approximately 620 pounds including the components.

d. TELETYPWRITER REPERFORATOR (RECEIVING).—This unit receives automatic telegraph signals from the incoming signal line and perforates and types the tape.

(1) GENERAL DESCRIPTION.

(*a*) The Teletypewriter reperforator provides means for recording telegraph messages on standard width (11/16 inch) perforated tape (see figure 1-5). It consists essentially of a typing and reperforating unit mounted, with a motor, on a base plate. The typing and reperforating unit includes a main shaft assembly, a holding magnet selector and selector mechanism, perforator, tape feed, typing and ribbon feed mechanisms. A manual tape feed-out push button is mounted on the lower left front corner of the base plate and an ON-OFF motor switch is mounted near the upper right rear corner of the reperforator.

(*b*) Printed characters and corresponding chadless code perforations are automatically recorded in the same operation. This typing reperforator is commonly used for relaying purposes as the recorded message may be automatically retransmitted by a distributor-transmitter. The printed characters simplify tape relaying procedures by eliminating the necessity of reading the code perforations.

(*c*) The chadless perforations of the tape leave its surface intact for printing purposes. However, the characters perforated in the tape are six positions in advance of the printed characters. This should be considered when severing the tape or inserting it in a distributor-transmitter. The end of the tape should include all the typewritten characters in the message, and the first typewritten character of the message must be

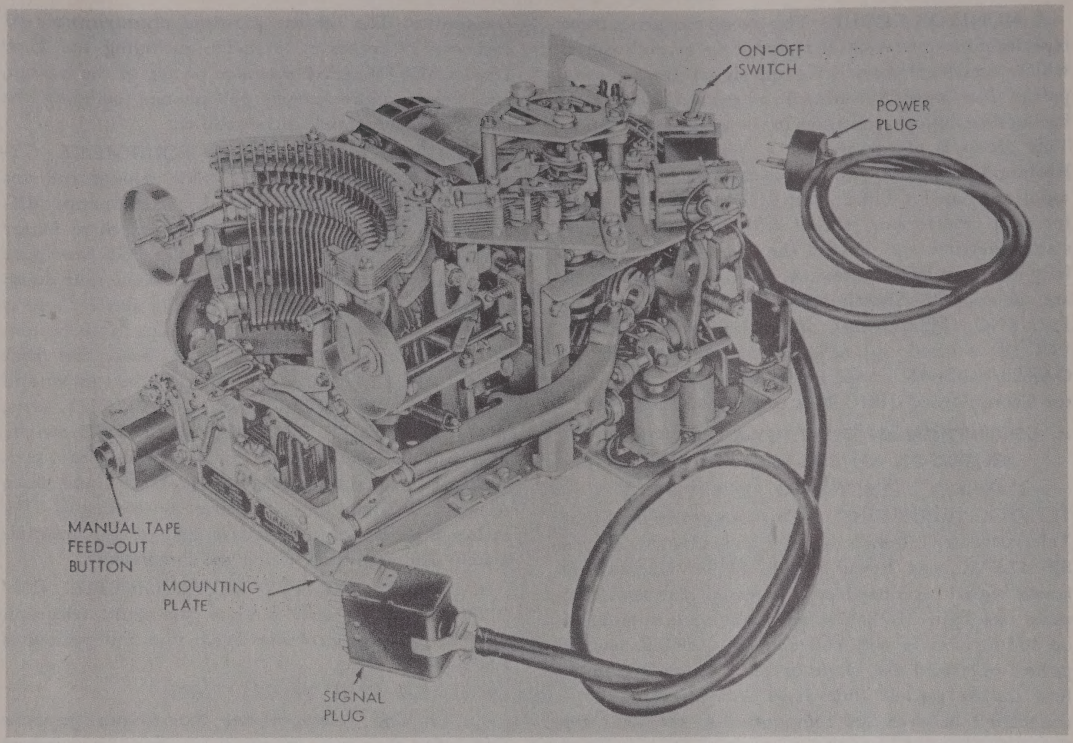

Figure 1—5. Teletypewriter Reperforator (Receiving), Oblique View

preceded by at least six sets of code perforations in order to transmit the entire message.

(*d*) The Teletypwriter reperforator is equipped to operate at a speed of 60 wpm but are readily adapted at 75 or 100 wpm by changing gears and other parts. The units operate from 0.060 ampere signal current and utilize the five-unit start-stop signaling code.

(*e*) The Teletypewriter reperforator incorporates the necessary electrical and mechanical features for transforming the code signals into mechanical action to perforate the tape and print the message in the same operation.

(*f*) Code signals are applied to a magnet associated with a selector mechanism which interprets the signals and controls the motions involved in printing a character and perforating the tape. Means are provided for orienting the selector mechanism to the incoming signals. Motion is extended to the functional mechanisms by the main shaft which is geared to the motor.

(*g*) The tape feed-out mechanism will cause tape to be fed out at the end of every message provided there is a lapse of approximately 500 milliseconds before the start of the next message. The metering mechanism controls the amount of tape that may be fed out at one time. A manual push button is provided to operate the tape feed-out and metering mechanisms when the automatic feature is not desired.

(2) DIFFERENCE BETWEEN UNITS.—The main difference between the units is the type of motor. Each unit is readily adapted to operate at 60, 75, or 100 (experimental) wpm by changing gears and parts as outlined in Section 3, par. 2*f*.

(*a*) TT-161/FGC-38.—This unit is driven by a synchronous motor and includes gear and parts for 60, 75, and 100 (experimental) wpm operation.

(*b*) TT-162/FGC-38X.—This unit is driven by a governed motor and includes gears and parts for 60, 75, and 100 (experimental) wpm operation.

(*c*) TT-163/FGC-39.—This unit is also driven by a synchronous motor and includes gears and parts for 65 wpm operation only.

e. DISTRIBUTOR-TRANSMITTER UNITS.

(1) TELETYPEWRITER DISTRIBUTOR-TRANSMITTER (MESSAGE).—This unit accepts perforated tape, converts it to automatic telegraph signals,

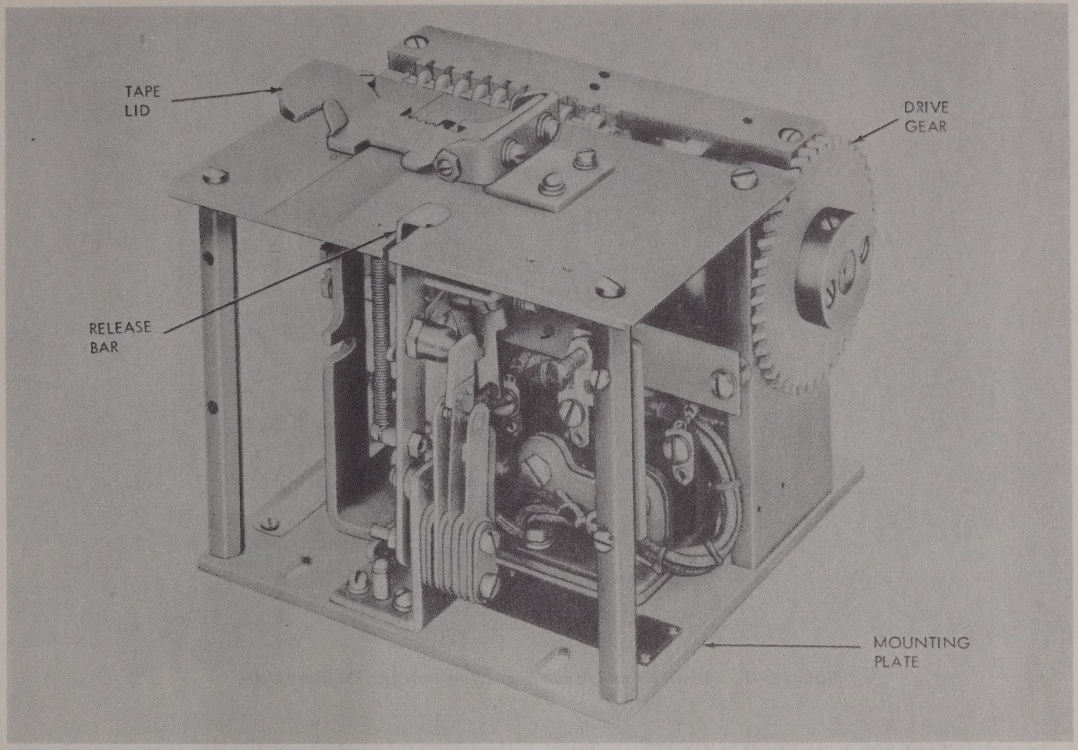

Figure 1—6. Distributor-Transmitter (Message), Oblique View

and sequentially distributes these signals to the outgoing line.

(*a*) GENERAL DESCRIPTION.—The multiple distributor-transmitter provides sending facilities for tape message relaying when used in conjunction with reperforators (see figure 1-6). A complete set consists of a base with cover and motor equipped with transmitting units. The multiple distributor-transmitter base provides facilities for operating three multiple message transmitters or three multiple numbering transmitters. Fewer units may be operated if desired, however, one outgoing line will usually use two message transmitters and one numbering transmitter. The function of the message transmitters is to translate the code combinations in the perforated tapes into electrical impulses. The impulses are then transmitted in sequence to a signal line. The message distributor-transmitter is arranged to handle either fully perforated or chadless tape from reperforators or tape prepared on keyboard perforators. A motor attached to the base furnishes motive power for driving the transmitter units through the medium of a countershaft and a set of gears. Each unit contains a slip connector which plugs into a receptacle mounted on the base, thus the unit is connected to the circuit when it is mounted on the base.

(*b*) DIFFERENCE BETWEEN UNITS. – The main differences between these units are the code they transmit and the speed of operation. The TT-167/FGC-38 includes parts to operate at 60, 75, or 100 (experimental) wpm. Distributor-Transmitter TT-167/FGC-38 transmits the 7.42 unit code, and Distributor-Transmitter TT-168/FGC-39 transmits the 7.00 unit code at 390 OPM only.

(2) TELETYPEWRITER DISTRIBUTOR-TRANSMITTER (NUMBERING).—This unit automatically numbers each message transmitted.

(*a*) GENERAL DESCRIPTION.—The numbering distributor-transmitter is the same as the message distributor-transmitter except for a LETTERS sensing mechanism which makes it responsive to a letters code combination (five perforations in the tape) in a numbering tape (see figure 1-7). The mechanism operates a contact connected to external control relays which stop the numbering distributor-transmitter and start a message distributor-transmitter.

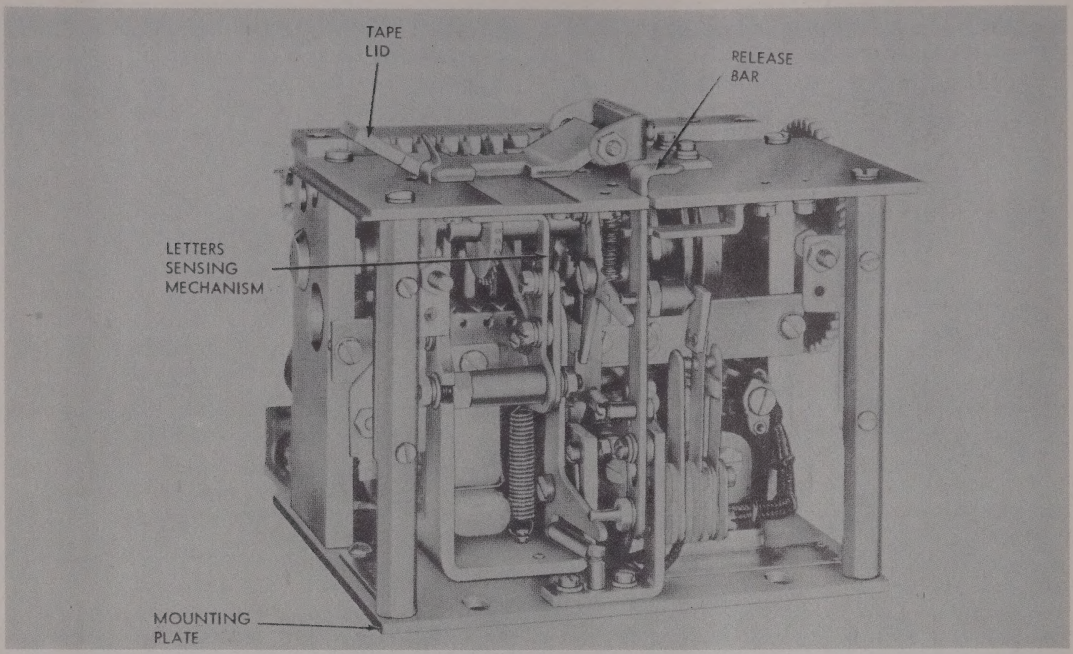

Figure 1—7. Distributor-Transmitter (Numbering), Oblique View

(*b*) DIFFERENCE BETWEEN UNITS. — The main differences between these units are the code they transmit and the speed of operation. TT-169/FGC-38 includes parts to operate at 60, 75, or 100 (experimental) wpm. Distributor-Transmitter TT-169/FGC-38 transmits the 7.42 unit code, and Distributor-Transmitter TT-170/FGC-39 transmits the 7.00 unit code at 390 OPM only.

f. DISTRIBUTOR-TRANSMITTER BASES.

(1) DISTRIBUTOR-TRANSMITTER BASE (NUMBERING).

(*a*) GENERAL DESCRIPTION.—The mounting base assembly is used to mount three distributor-transmitters used for message numbering and to provide tape winder and tape reel facilities for numbering tapes (see figure 1-8). The assembly consists of a base casting, base plate, motor, countershaft with gears, covers, capacitors and resistors. The motor is geared to the countershaft which in turn drives the distributor-transmitters through individual drive gears. The base contains three 10-point slip connectors for electrically connecting the three distributor-transmitter units and filter circuits. A 27-point male connector on a cable and a 3-point male plug on a cord are provided for signal and power connections. A complete complement of covers is provided with individual doors covering the front of the individual distributor-transmitter units. This provides for removing and/or replacing any single distributor-transmitter without interfering with the other two units. Each door is provided with a tape reel and card holder for circuit designation.

(*b*) DIFFERENCE BETWEEN UNITS.—The numbering bases are all the same except for the type motor used for driving the units. Distributor-Transmitter Bases MT-1372/FGC-38 and MT-1374/FGC-39 are driven by synchronous motors, and Distributor-Transmitter Base MT-1373/FGC-38X is driven by a governed motor, MT-1372/FGC-38 and MT-1373/FGC-38X are supplied with gears to operate at 60, 75, or 100 (experimental) wpm, and MT-1374/FGC-39 operates at 390 OPM only.

(2) DISTRIBUTOR-TRANSMITTER BASE (MESSAGE).

(*a*) GENERAL DESCRIPTION.—The base used for the message distributor-transmitter is the same as used for the numbering distributor-transmitter (paragraph (1) above) except that it does not contain tape reels nor individual doors in front of each unit (see figure 1-9). A tape chute is provided on this base to guide the tape into the proper tape bin after it goes through the right hand distributor-transmitter.

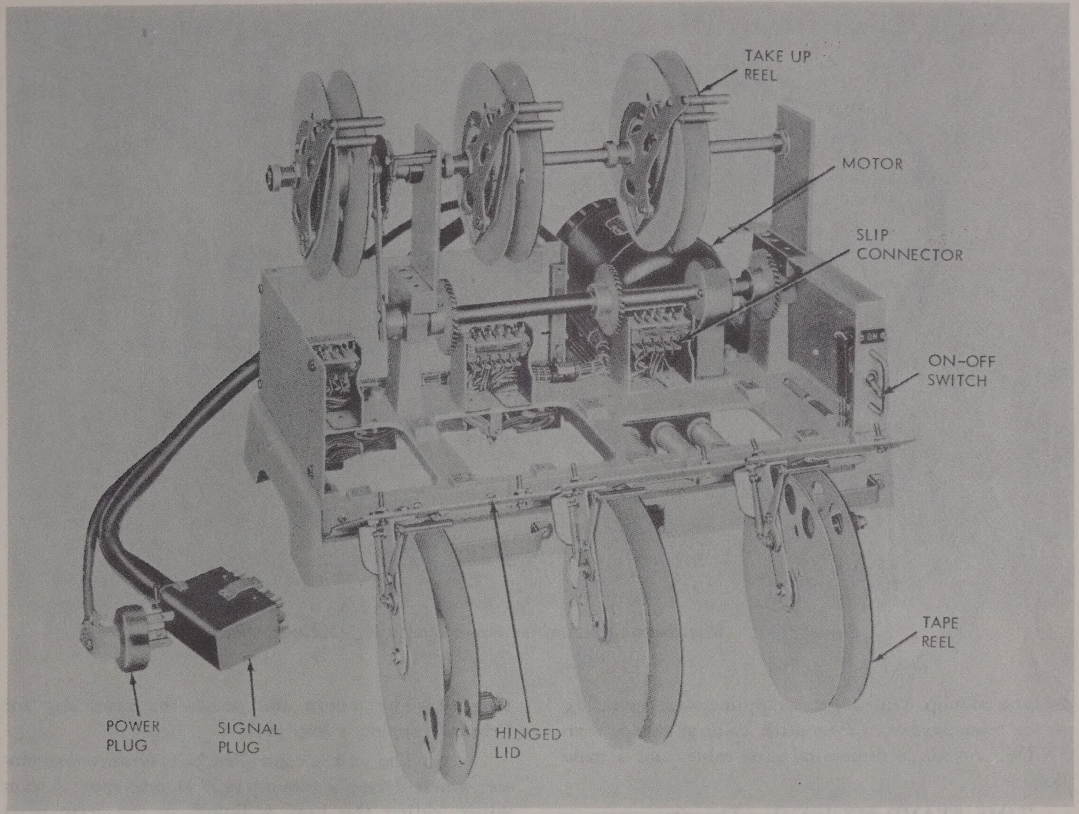

Figure 1—8. Distributor-Transmitter Base (Numbering), Oblique View

(*b*) DIFFERENCE BETWEEN UNITS.—These units are the same except for the type motor used for driving. Each unit (except the MT-1371/FGC-39) is readily adapted to operate at 60, 75, or 100 (experimental) wpm by changing motor pinion and drive gear. Extra gears are furnished with each unit, except the MT-1371/FGC-39 which operates at 390 OPM only. Distributor-Transmitter Bases MT-1369/FGC-38 and MT-1371/FGC-39 are driven by synchronous motors, and Distributor-Transmitter Base MT-1370/FGC-38X is driven by a governed motor.

g. TELETYPEWRITER REPERFORATOR (MONITORING).—This unit receives automatic telegraph signals from the transmitter group, perforates, and types tape for monitoring purposes.

The reperforator used in the monitor groups is similar to the reperforators in the receiver groups except that the monitor reperforators do not have the manual or automatic tape feed-out feature (see figure 1-10). The main differences between the units are the type of motor and the speed of operation. Each unit (except TT-166/FGC-39) is readily adaptable to 60, 75, or 100 (experimental) wpm by changing gears and parts as outlined in Section 3, paragraph 2*f*.

(1) TT-164/FGC-38.—This unit is driven by a synchronous motor and includes gears and parts for 60, 75 and 100 (experimental) wpm operation.

(2) TT-165/FGC-38X.—This unit is driven by a governed motor and includes gears and parts for 60, 75, and 100 (experimental) wpm operation.

(3) TT-166/FGC-39.—This unit is also driven by a synchronous motor and includes gears and parts for 65 wpm operation only.

h. MOTOR DRIVEN TAPE REELING MACHINE RL-173/FGC.—This unit reels the tape for storage in the monitor cabinet as the tape is perforated, typed, and time stamped (see figure 1-11). It consists of a motor to drive the tape reel, a speed-reducing gear train, a tape reel to accommodate approximately 1000 feet of chadless, perforated tape, and a clutch assembly to regulate

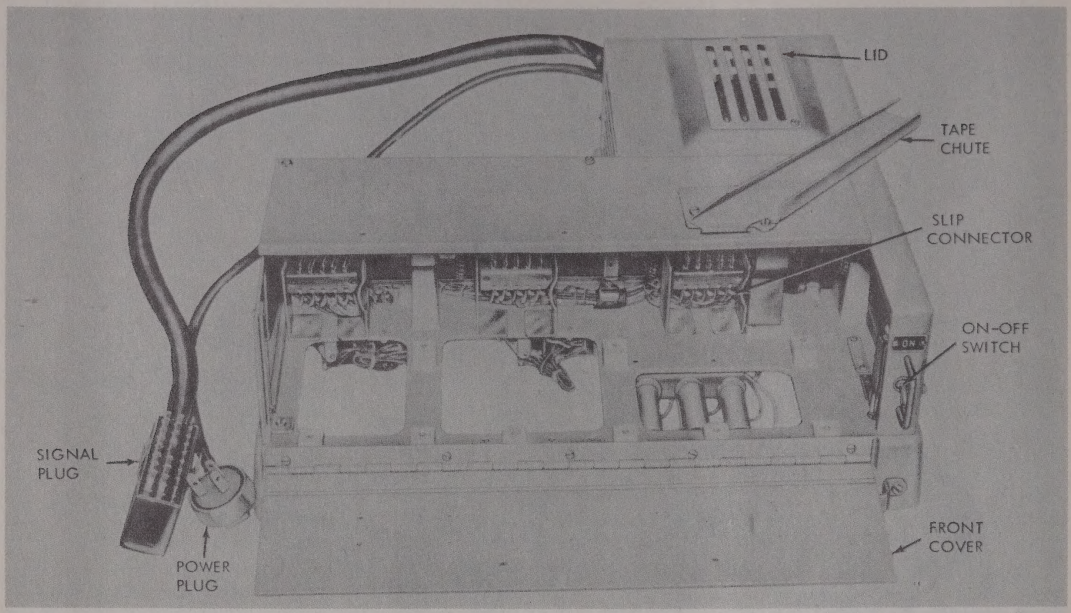

Figure 1–9. Distributor-Transmitter Base (Message), Oblique View

the tape take-up. The motor is supplied with operating power from within the monitor cabinet through an ON-OFF switch, a three-conductor cable, and a male plug.

i. TIME STAMP MX-1527/U.—The time stamp is mounted between the reperforator and the reeling machine on each of the three shelves in the monitor cabinet in Teletypewriter Sets AN/FGC-38 and AN/FGC-39 only.

(1) GENERAL DESCRIPTION.—The Time Stamp MX-1527/U is a mechanism for printing the current date and time, at one minute intervals, on the perforated tape emerging from the typing reperforator (see figure 1-12). The printing is done automatically by a solenoid and a plunger controlled by a magnet that is not active unless a message is being transmitted. However, only the printing is stopped; the time clock will continue running, thus advancing the typewheels to stamp the next message with the current date and time.

(*a*) A ribbon feed mechanism, coupled to an arm of the plunger, advances the ribbon as the machine stamps. When the ribbon is completely wound from one spool, the direction of the feed is automatically reversed.

(*b*) The only manual operation necessary is to change the year typewheel at the end of the year. The mechanism automatically compensates for the days in a long or short month and prints the extra day for February during a leap year.

(*c*) The unit is controlled by a synchronous motor which drives a minute cam at one rpm. A cam wiper, riding this cam, is linked to the drive pawl which advances a ratchet one tooth each minute. The ratchet is secured to a shaft which drives the minute drive gear and minute typewheel.

(*d*) The hour typewheel is advanced by a lever and spring arrangement which is actuated by a cam on the minute wheel. The lever advances the hour wheel one tooth on its sprocket each time the minute wheel makes a complete revolution.

(*e*) The date typewheel is advanced by a lever and spring arrangement the same as the hour wheel, except that its lever is controlled by a cam on the spacer wheel which turns integrally with the hour wheel. Thus, every 24 hours or one complete revolution of the hour wheel, the date wheel is advanced one tooth on its sprocket.

(*f*) The month typewheel is also advanced in the same manner as the hour and date wheels. The throw lever which advances the month wheel is controlled by a cam on the date wheel, thus the month wheel is advanced one tooth on its sprocket for each revolution of the date wheel. A special cam on the month wheel actuates a skip lever assembly which controls the date wheel for 28, 29, 30, and 31 day months. The time

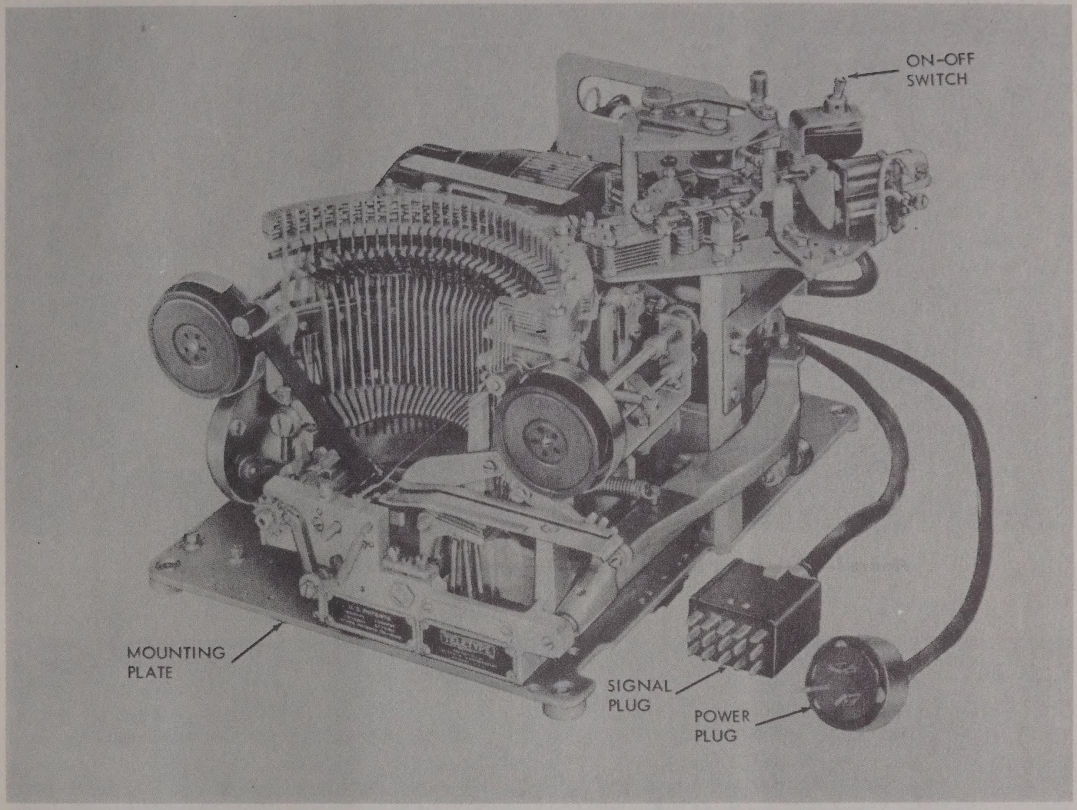

Figure 1—10. Teletypewriter Reperforator (Monitoring), Oblique View

stamp is a progressive movement of the typewheels which are actuated by a cam wiper riding on the cam on one wheel and its attached push pawl advancing the succeeding wheel. The progression is maintained from the minute to the hour wheel, from the hour to the date wheel, and from the date to the month wheel.

(2) DIFFERENCE BETWEEN UNITS.—The Time Stamp MX-1527/U is the same in all models.

j. POWER SUPPLY PP-987/U.—One power supply is included with each receiver and transmitter group to supply all of the d-c voltages necessary for operation of the two groups (see figure 1-13). The power supply is housed in a metal cage to protect it and is mounted in the bottom of each group. The component contains dry-disk rectifiers, a transformer, and associated parts and wiring.

k. CONTROL PANEL SB-357/FGC.—This control panel is used in Receiver Groups OA-616/FGC-38, OA-619/FGC-38X, and OA-622/FGC-39 (see figure 1-14). The control panel mounts in the Electrical Equipment Cabinet CY-1523/FGC on rails in the upper portion of the cabinet and contains the line and other relays necessary for operation of one incoming line. The Receiver Groups are equipped with one control panel for each of the three incoming lines and one control panel for the spare receiver reperforator.

l. CONTROL PANEL SB-358/FGC.—This control panel is used in Transmitter Groups OA-615/FGC-38, OA-618/FGC-38X, and OA-621/FGC-39 (see figure 1-15). The control panel mounts in Electrical Equipment Cabinet CY-1524/FGC on the relay rack for rear accessibility and contains the line relay and other relays necessary for operation of one line. The Transmitter Groups are equipped with a total of three control panels, one for each outgoing line.

m. CABLE ASSEMBLIES CX-2648/FGC, CX-2649/FGC, AND CX-2650/FGC.

(1) The Cable Assembly CX-2649/FGC is used to connect the Receiver Groups to the KEY receiver

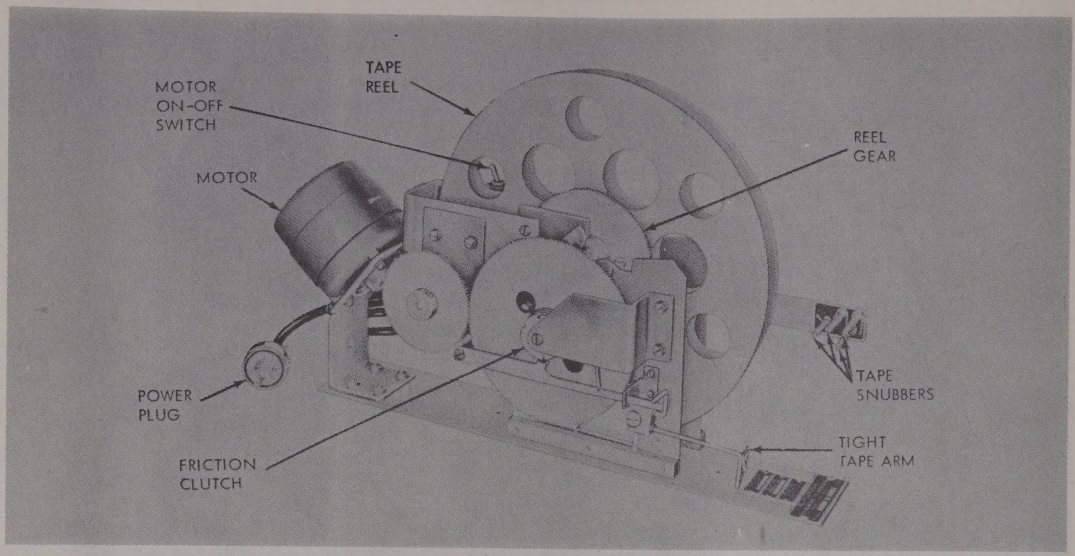

Figure 1—11. Motor Driven Tape Reeling Machine RL-173/FGC, Left Side View

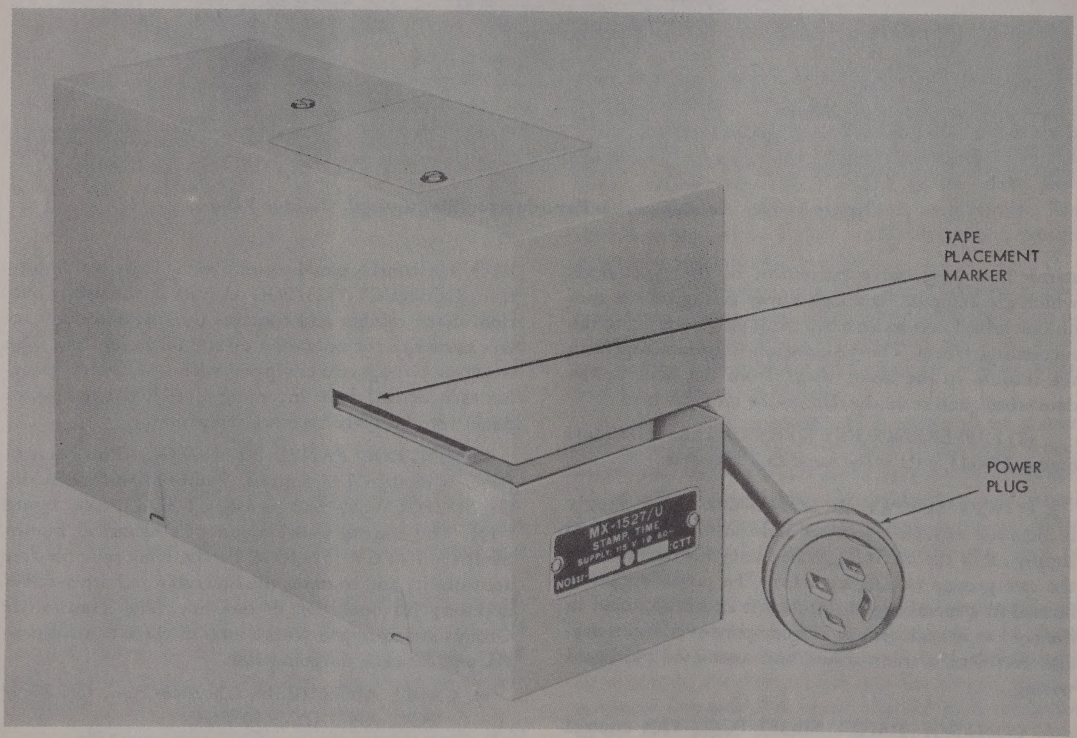

Figure 1—12. Time Stamp MX-1527/U, Oblique View

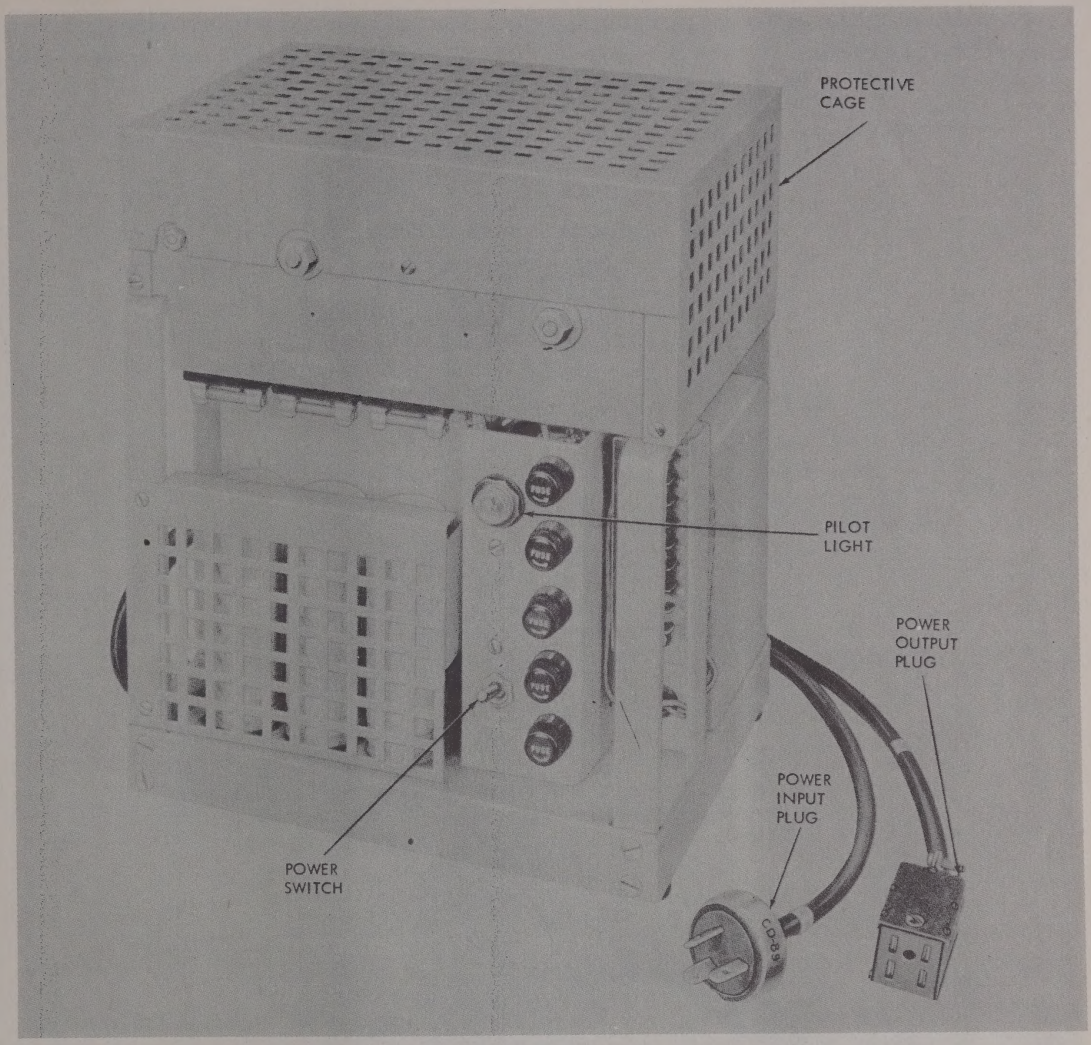

Figure 1—13. Power Supply PP-987/U, Front View

Group in an installation, and is terminated at one end with a 24-point connector (see figure 1-16).

(2) The Cable Assembly CX-2648/FGC is used to connect the Transmitter Groups to the KEY Transmitter Group in an installation and is terminated at one end with a 24-point connector.

(3) The Cable Assembly CX-2650/FGC is used to connect the Monitor Groups to their associated Transmitter Groups and is terminated at both ends with 35-point connectors.

5. REFERENCE DATA.

a. NOMENCLATURE. — Teletypewriter Set AN/FGC-38, AN/FGC-38X, and AN/FGC-39 (semiautomatic tape relay equipment).

b. CONTRACT DATA.—NObsr 52445 dated 3 April 1953.

c. CONTRACTOR.—Teletype Corporation, Chicago 14, Illinois.

d. COGNIZANT NAVAL INSPECTOR.—Inspector of Naval Material, Chicago 6, Illinois.

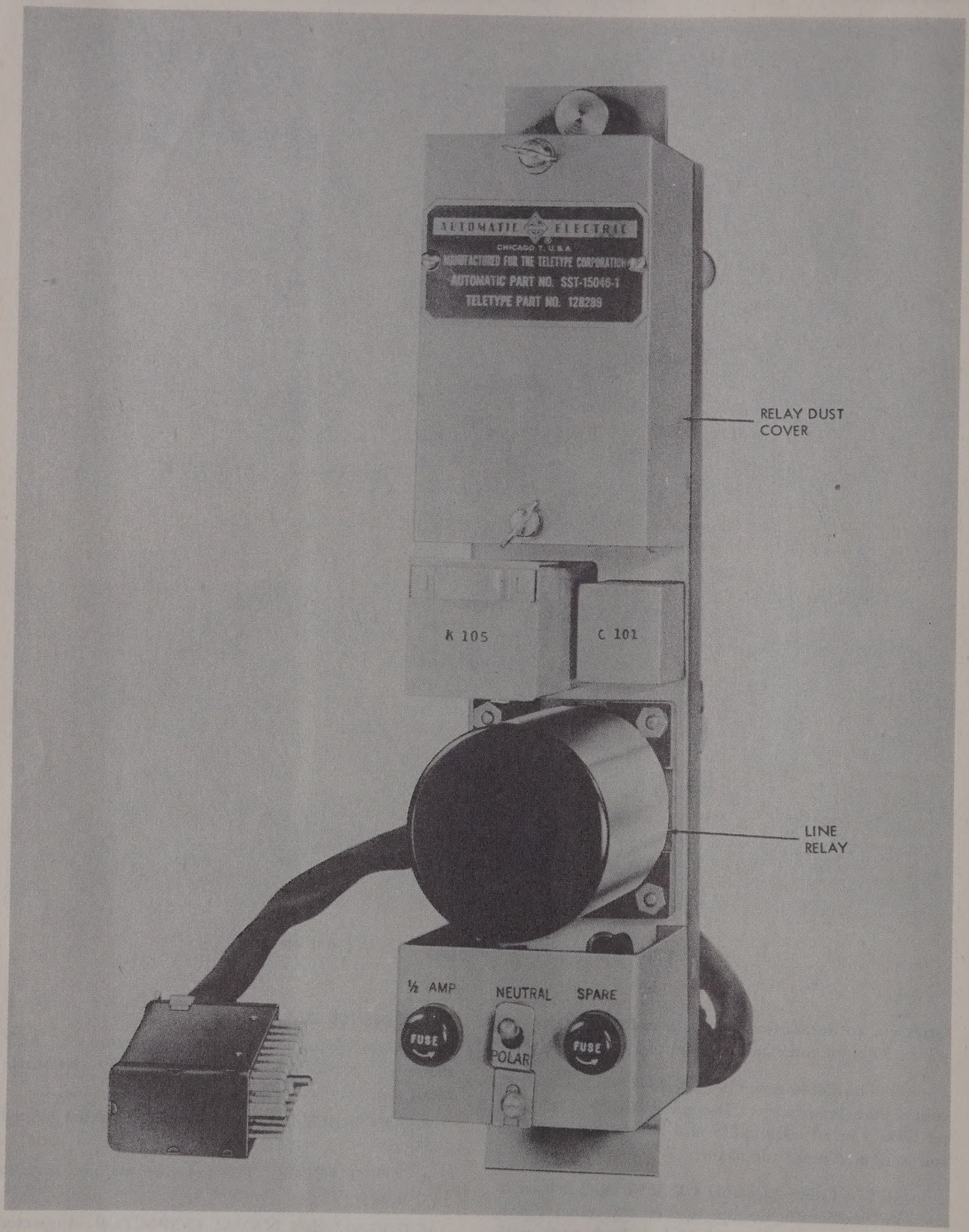

Figure 1—14. Control Panel SB-357/FGC, Rear View

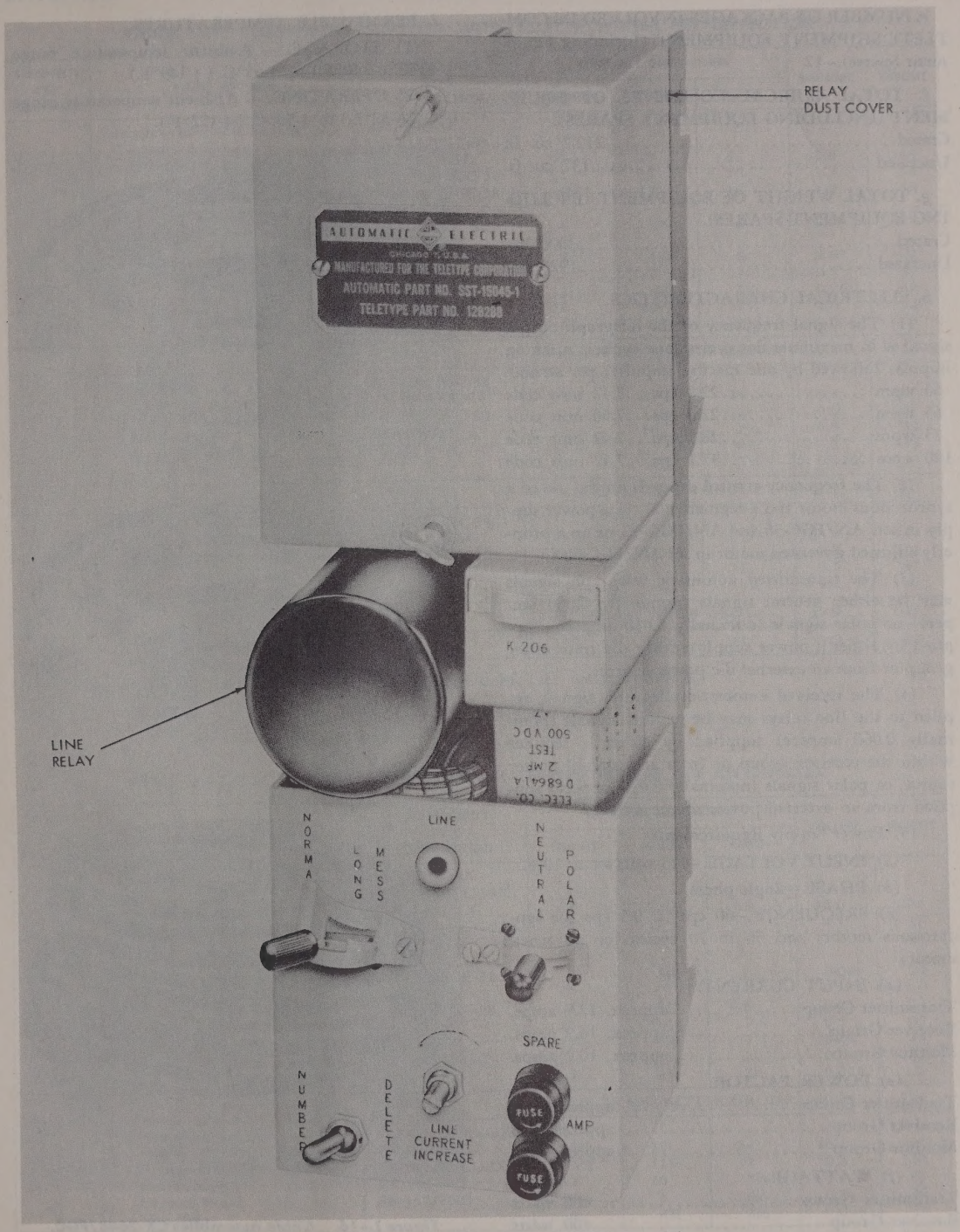

Figure 1—15. Control Panel SB-358/FGC, Rear View

e. NUMBER OF PACKAGES INVOLVED IN COMPLETE SHIPMENT EQUIPMENT (Including Equipment Spares).—12

f. TOTAL CUBICAL CONTENTS OF EQUIPMENT (INCLUDING EQUIPMENT SPARES).

Crated ..... 212.2 cu. ft.
Uncrated ..... 137 cu. ft.

g. TOTAL WEIGHT OF EQUIPMENT (INCLUDING EQUIPMENT SPARES).

Crated ..... 3020 lbs.
Uncrated ..... 1926 lbs.

h. ELECTRICAL CHARACTERISTICS.

(1) The signal frequency of the telegraph output signal is in maximum dot cycles (one cycle is marking impulse followed by one spacing impulse) per second.

60 wpm ..... 22.8 cps...7.42 unit code
65 wpm ..... 22.8 cps...7.00 unit code
75 wpm ..... 28.5 cps...7.42 unit code
100 wpm ..... 37.1 cps...7.42 unit code

(2) The frequency control depends on the use of a synchronous motor and a regulated 60-cycle power supply in sets AN/FGC-38 and AN/FGC-39, or on a properly adjusted governed motor in set AN/FGC-38X.

(3) The transmitted automatic telegraph signals may be either neutral signals (nominally 0.060 ampere) or polar signals (nominally 0.030 ampere) supplied by either a power supply within the transmitter group or from an external d-c power source.

(4) The received automatic telegraph signals applied to the line relays may be neutral signals (nominally 0.060 ampere) supplied by either a rectifier within the receiver group or from an external power source, or polar signals (nominally 0.030 ampere) supplied from an external power source only.

(5) Power Supply Requirements.

(*a*) INPUT VOLTAGE.—115-volts a-c ± 10%.

(*b*) PHASE.—single phase.

(*c*) FREQUENCY.—60 cps ± 0.5 cps for synchronous motors and 50 to 70 cycles for governed motors.

(*d*) INPUT CURRENT.

Transmitter Group ..... approx. 12.9 amps.
Receiver Group ..... approx. 14.9 amps.
Monitor Group ..... approx. 10.2 amps.

(*e*) POWER FACTOR.

Transmitter Group ..... approx. 0.34
Receiver Group ..... approx. 0.36
Monitor Group ..... approx. 0.36

(*f*) WATTAGE.

Transmitter Group ..... 400 watts
Receiver Group ..... 400 watts
Monitor Group ..... 1250 watts

i. PERMISSIBLE TEMPERATURES.

(1) STORAGE. — Ambient temperature range —40°C. (—40°F.) to +65°C. (+149°F.).

(2) OPERATING. — Ambient temperature range 0°C. (+32°F.) to +50°C. (+122°F.).

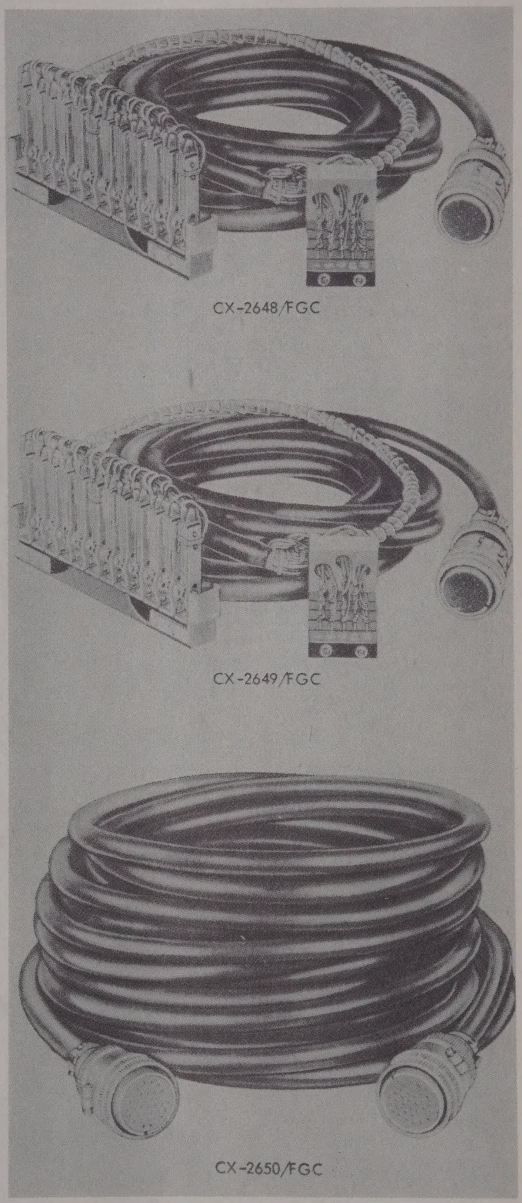

Figure 1—16. Cable Assemblies CX-2648/FGC, CX-2649/FGC, and CX-2650/FGC

TABLE 1–1. EQUIPMENT SUPPLIED WITH TELETYPEWRITER SET AN/FGC-38

QUANTITY PER EQUIPMENT	NAME OF UNIT	ARMY-NAVY TYPE DESIGNATION	OVER-ALL DIMENSIONS			VOLUME	WEIGHT
			HEIGHT	WIDTH	DEPTH		
	Teletypewriter Set Including:	AN/FGC-38					
	Transmitter Group:	OA-615/FGC-38					
1	Cabinet, Electrical Equipment	CY-1524/FGC	67	27	43	45.0	284
1	Base, Distributor-Transmitter	MT-1369/FGC-38	11	17	16	1.7	36
2	Base, Distributor-Transmitter	MT-1372/FGC-38	6½	17	16	1.0	56
3	Distributor-Transmitter, Teletypewriter	TT-167/FGC-38	4	5¼	6	0.07	14
6	Distributor-Transmitter, Teletypewriter	TT-169/FGC-38	4	5¼	6	0.07	27
1	Power Supply	PP-987/U	12	10	7½	0.5	49
3	Control Panel	SB-358/FGC	13½	4½	7½	0.26	42
1	Tape Holder	MX-1569/FGC	21	19½	2½	0.6	22
3	Line Relay		6	2¾	2¾	0.026	3
					TOTAL TRANSMITTER GROUP	49.23	533
	Receiver Group:	OA-616/FGC-38					
1	Cabinet, Electrical Equipment	CY-1523/FGC	77⅜	33	24	46.1	505
4	Reperforator, Teletypewriter	TT-161/FGC-38	7½	11½	12	0.6	156
1	Power Supply	PP-987/U	12	10	7½	0.5	49
4	Control Panel	SB-357/FGC	13½	3	8½	0.2	36
4	Line Relay		6	2¾	2¾	0.026	4
					TOTAL RECEIVER GROUP	47.43	750
	Monitor Group:	OA-617/FGC-38					
1	Cabinet, Electrical Equipment	CY-1522/FGC	77⅜	27	24	38.3	420
3	Reperforator, Teletypewriter	TT-164/FGC-38	8½	11½	12	0.7	111
3	Reeling Machine, Tape	RL-173/FGC	12	5	21	0.7	47
3	Time Stamp	MX-1527/U	7	4¼	13¾	0.2	50
					TOTAL MONITOR GROUP	39.9	628
1	Maintenance Parts Kit		18¾	16¼	11	1.9	30

Unless otherwise stated, dimensions are inches, volume cubic feet, weight pounds.

TABLE 1–2. EQUIPMENT SUPPLIED WITH TELETYPEWRITER SET AN/FGC-38X

QUANTITY PER EQUIPMENT	NAME OF UNIT	ARMY-NAVY TYPE DESIGNATION	OVER-ALL DIMENSIONS			VOLUME	WEIGHT
			HEIGHT	WIDTH	DEPTH		
	Teletypewriter Set Including:	AN/FGC-38X					
	Transmitter Group:	OA-618/FGC-38X					
1	Cabinet, Electrical Equipment	CY-1524/FGC	67	27	43	45.0	284
1	Base, Distributor-Transmitter	MT-1370/FGC-38X	11	17	16	1.7	38
2	Base, Distributor-Transmitter	MT-1373/FGC-38X	6½	17	16	1.0	60
3	Distributor-Transmitter, Teletypewriter	TT-167/FGC-38	4	5¼	6	0.07	14
6	Distributor-Transmitter, Teletypewriter	TT-169/FGC-38	4	5¼	6	0.07	27
1	Power Supply	PP-987/U	12	10	7½	0.5	49
3	Control Panel	SB-358/FGC	13½	4½	7½	0.26	14
1	Tape Holder	MX-1569/FGC	21	19½	2½	0.6	22
3	Line Relay		6	2¾	2¾	0.026	3
					TOTAL TRANSMITTER GROUP	49.23	539
	Receiver Group:	OA-619/FGC-38X					
1	Cabinet, Electrical Equipment	CY-1523/FGC	77⅜	33	24	46.1	505
4	Reperforator, Teletypewriter	TT-162/FGC-38X	7½	11½	12	0.6	164
1	Power Supply	PP-987/U	12	10	7½	0.5	49
4	Control Panel	SB-357/FGC	13½	3	8½	0.2	36
4	Line Relay		6	2¾	2¾	0.026	4
					TOTAL RECEIVER GROUP	47.43	758

TABLE 1–2. EQUIPMENT SUPPLIED WITH TELETYPEWRITER SET AN/FGC-38X—Continued

QUANTITY PER EQUIPMENT	NAME OF UNIT	ARMY-NAVY TYPE DESIGNATION	OVER-ALL DIMENSIONS			VOLUME	WEIGHT
			HEIGHT	WIDTH	DEPTH		
	Monitor Group:	OA-620/FGC-38X					
1	Cabinet, Electrical Equipment	CY-1522/FGC	77⅜	27	24	38.3	420
3	Reperforator, Teletypewriter	TT-165/FGC-38X	8½	11½	12	0.7	117
3	Reeling Machine, Tape	RL-173/FGC	12	5	21	0.7	47
					TOTAL MONITOR GROUP	39.7	584
1	Maintenance Parts Kit		18¾	16¼	11	1.9	30

Unless otherwise stated, dimensions are inches, volume cubic feet, weight pounds.

TABLE 1–3. EQUIPMENT SUPPLIED WITH TELETYPEWRITER SET AN/FGC-39

QUANTITY PER EQUIPMENT	NAME OF UNIT	ARMY-NAVY TYPE DESIGNATION	OVER-ALL DIMENSIONS			VOLUME	WEIGHT
			HEIGHT	WIDTH	DEPTH		
	Teletypewriter Set Including:						
	Transmitter Group:	OA-621/FGC-39					
1	Cabinet, Electrical Equipment	CY-1524/FGC	67	27	43	45.0	284
1	Base, Distributor-Transmitter	MT-1371/FGC-39	11	17	16	1.7	36
2	Base, Distributor-Transmitter	MT-1374/FGC-39	6½	17	16	1.0	56
3	Distributor-Transmitter, Teletypewriter	TT-168/FGC-39	4	5¼	6	0.07	14
6	Distributor-Transmitter, Teletypewriter	TT-170/FGC-39	4	5¼	6	0.07	27
1	Power Supply	PP-987/U	12	10	7½	0.5	49
3	Control Panel	SB-358/FGC	13½	4½	7½	0.26	42
1	Tape Holder	MX-1569/FGC	21	19½	2½	0.6	22
3	Line Relay		6	2¾	2¾	0.026	3
					TOTAL TRANSMITTER GROUP	49.23	533
	Receiver Group:	OA-622/FGC-39					
1	Cabinet, Electrical Equipment	CY-1523/FGC	77⅜	33	24	46.1	505
4	Reperforator, Teletypewriter	TT-163/FGC-39	7½	11½	12	0.6	156
1	Power Supply	PP-987/U	12	10	7½	0.5	49
4	Control Panel	SB-357/FGC	13½	3	8½	0.2	36
4	Line Relay		6	2¾	2¾	0.026	4
					TOTAL RECEIVER GROUP	47.43	750
	Monitor Group:	OA-623/FGC-39					
1	Cabinet, Electrical Equipment	CY-1522/FGC	77⅜	27	24	38.3	420
3	Reperforator, Teletypewriter	TT-166/FGC-39	8½	11½	12	0.7	111
3	Reeling Machine, Tape	RL-173/FGC	12	5	21	0.7	47
3	Time Stamp	MX-1527/U	7	4¼	13¾	0.2	50
					TOTAL MONITOR GROUP	39.9	628
1	Maintenance Parts Kit		18¾	16¼	11	1.9	30

Unless otherwise stated, dimensions are inches, volume cubic feet, weight pounds.

TABLE 1–4. SHIPPING DATA

SHIPPING BOX NO.	QTY.	CONTENTS				OVER-ALL DIMENSIONS			VOLUME	WEIGHT
		NAME	DESIGNATION							
			AN/FGC-38	AN/FGC-38X	AN/FGC-39	HEIGHT	WIDTH	DEPTH		
1	1	Cabinet, Electrical Equipment	CY-1522/FGC	CY-1522/FGC	CY-1522/FGC	83½	32¼	29	45.2	640
2	1	Cabinet, Electrical Equipment	CY-1523/FGC	CY-1523/FGC	CY-1523/FGC	83½	38¼	29	53.6	735
3	1	Cabinet, Electrical Equipment	CY-1524/FGC	CY-1524/FGC	CY-1524/FGC	49¼	34¼	54¾	53.4	410
4	1	Power Supply	PP-987/U	PP-987/U	PP-987/U	15	10¼	15¼	1.4	65
5	1	Power Supply	PP-987/U	PP-987/U	PP-987/U	15	10¼	15¼	1.4	65
6	2 3 6	Base, Distributor-Transmitter Distributor-Transmitter Distributor-Transmitter	MT-1369/FGC-38 TT-169/FGC-38 TT-167/FGC-38	MT-1370/FGC-38X TT-169/FGC-38 TT-167/FGC-38	MT-1371/FGC-39 TT-170/FGC-39 TT-168/FGC-39	30	28¼	21¼	10.4	195
7	1	Base, Distributor Transmitter	MT-1372/FGC-38	MT-1373/FGC-38X	MT-1374/FGC-39	25½	21	24½	7.6	145
8	2	Reperforator	TT-161/FGC-38	TT-162/FGC-38X	TT-163/FGC-39	34¾	20½	21½	8.9	175
9	2	Reperforator	TT-161/FGC-38	TT-162/FGC-38X	TT-163/FGC-39	23	20½	28½	7.7	160
10	1 1 1	Reperforator Reeling Machine Maintenance Parts Kit	TT-164/FGC-38 RL-173/FGC	TT-165/FGC-38X RL-173/FGC	TT-166/FGC-39 RL-173/FGC	31	17½	26	8.2	140
11	1 1 1	Reperforator Reeling Machine Stamp, Time	TT-164/FGC-38 RL-173/FGC MX-1527/U	TT-165/FGC-38X RL-173/FGC	TT-166/FGC-39 RL-173/FGC MX-1527/U	31	17½	22¾	7.1	140
12	1 1 2	Reperforator Reeling Machine Stamp, Time	TT-164/FGC-38 RL-173/FGC MX-1527/U	TT-165/FGC-38X RL-173/FGC	TT-166/FGC-39 RL-173/FGC MX-1527/U	31	17½	22¾	7.1	150
							TOTAL		212.0	3020

Unless otherwise stated, dimensions are inches, volume cubic feet, weight pounds.

6. EQUIPMENT SIMILARITIES.

Teletypewriter Sets AN/FGC-38, AN/FGC-38X, and AN/FGC-39 are similar to Teletypewriter Set AN/FGC-6. The information contained in the Installation and Operation sections of AN/FGC-6 applies also to AN/FGC-38, AN/FGC-38X, and AN/FGC-39. When specific differences are found, mention of these differences will be in the applicable portion of the text. When the information applies to all models of the equipment, reference will be made by AN/FGC.

TABLE 1–5. EQUIPMENT SIMILARITIES OF AN/FGC SERIES

MODEL	NAME	OPERATING CHARACTERISTICS	REMARKS
AN/FGC-6	Teletypewriter Set	7.42 unit code 60, 75, or 100 (experimental) wpm.	Uses synchronous motors.
AN/FGC-38	Teletypewriter Set	7.42 unit code 60, 75, or 100 (experimental) wpm.	Uses synchronous motors. Minor mechanical and electrical changes from AN/FGC-6.
AN/FGC-38X	Teletypewriter Set	7.42 unit code 60, 75, or 100 (experimental) wpm.	Uses governed motors. Minor mechanical and electrical changes from AN/FGC-6.
AN/FGC-39	Teletypewriter Set	7.00 unit code, 65 wpm only.	Uses synchronous motors. Minor mechanical and electrical changes from AN/FGC-6.

TABLE 1–6. UNIT SIMILARITIES IN AN/FGC SERIES EQUIPMENTS

MODEL	NAME	OPERATING CHARACTERISTICS	REMARKS
TT-141/FGC-6 TT-161/FGC-38 TT-163/FGC-39	Reperforator, Teletypewriter	7.42 or 7.00 unit code has manual tape feedout feature.	Synchronous motor.
TT-140/FGC-6 TT-164/FGC-38 TT-166/FGC-39	Reperforator, Teletypewriter	7.42 or 7.00 unit code. No manual tape feedout.	Synchronous motor.
TT-162/FGC-38X	Reperforator, Teletypewriter	Similar to TT-141/FGC-6.	Governed motor.
TT-165/FGC-38X	Reperforator, Teletypewriter	Similar to TT-140/FGC-6.	Governed motor.
TT-138/FGC-6	Distributor-Transmitter, Teletypewriter	7.42 unit code; message transmission.	
TT-167/FGC-38	Distributor-Transmitter, Teletypewriter	7.42 unit code; message transmission.	Mechanical changes from TT-138/FGC-6; not interchangeable.
TT-168/FGC-39	Distributor-Transmitter, Teletypewriter	7.00 unit code; message transmission.	Similar to TT-167/FGC-38, but different camshaft.
TT-139/FGC-6	Distributor-Transmitter, Teletypewriter	7.42 unit code; number transmission only.	
TT-169/FGC-38	Distributor-Transmitter, Teletypewriter	7.42 unit code; number transmission only.	Mechanical changes from TT-139/FGC-6; not interchangeable.
TT-170/FGC-39	Distributor-Transmitter, Teletypewriter	7.00 unit code; number transmission only.	Similar to TT-169/FGC-38, but different camshaft.
MT-1258/FGC-6	Base, Distributor-Transmitter	Drives and mounts TT-138/FGC-6.	Synchronous motor.
MT-1372/FGC-38	Base, Distributor-Transmitter	Drives and mounts TT-167/FGC-38.	Similar to MT-1258/FGC-6, but with mechanical changes; not interchangeable.
MT-1373/FGC-38X	Base, Distributor-Transmitter	Drives and mounts TT-167/FGC-38.	Similar to MT-1372/FGC-38, but with governor motor.

TABLE 1–6. UNIT SIMILARITIES IN AN/FGC SERIES EQUIPMENTS—Continued

MODEL	NAME	OPERATING CHARACTERISTICS	REMARKS
MT-1374/FGC-39	Base, Distributor-Transmitter	Drives and mounts TT-168-FGC-39.	Similar to MT-1372/FGC-38, but has different gears; interchangeable provided gears are changed.
MT-1259/FGC-6	Base, Distributor-Transmitter	Drives and mounts TT-139/FGC-6.	Synchronous motor.
MT-1369/FGC-38	Base, Distributor-Transmitter	Drives and mounts TT-169/FGC-38.	Similar to MT-1259/FGC-6, but with mechanical changes; not interchangeable.
MT-1370/FGC-38X	Base, Distributor-Transmitter	Drives and mounts TT-169/FGC-38.	Similar to MT/1372/FGC-38, but with governed motor.
MT-1371/FGC-39	Base, Distributor-Transmitter	Drives and mounts TT-170/FGC-39.	Similar to MT-1372/FGC-38, but has different gears; interchangeable with change in gears.
CY-1421/FGC-6	Cabinet, Electrical Equipment	Mounts units of Transmitter Group OA-517/FGC-6.	
CY-1524/FGC	Cabinet, Electrical Equipment	Mounts units of Transmitter Groups OA-615/FGC-38, OA-618/FGC-38X, and OA-621/FGC-39.	Same as CY-1421/FGC-6.
CY-1422/FGC-6	Cabinet, Electrical Equipment	Mounts units of Receiver Group OA-518/FGC-6.	
CY-1523/FGC	Cabinet, Electrical Equipment	Mounts units of Receiver Groups OA-616/FGC-38, OA-619/FGC-38X and OA-622/FGC-39.	Same as CY-1422/FGC-6.
CY-1423/FGC-6	Cabinet, Electrical Equipment	Mounts units of Monitor Group OA-519/FGC-6.	
CY-1522/FGC	Cabinet, Electrical Equipment	Mounts units of Monitor Groups OA-619/FGC-38, OA-620/FGC-38X and OA-623/FGC-39.	Same as CY-1423/FGC-6.

INSTRUCTION BOOK

for

TELETYPEWRITER SETS AN/FGC-38, AN/FGC-38X, and AN/FGC-39

SECTION 2

THEORY OF OPERATION

UNCLASSIFIED

INSTRUCTION BOOK

for

TELETYPEWRITER SETS AN/FGC-38, AN/FGC-38X, and AN/FGC-39

SECTION 2

THEORY OF OPERATION

UNCLASSIFIED

TABLE OF CONTENTS

Paragraph		Page
1.	General Description	2-0
a.	General	2-0
b.	Receiver Group	2-0
c.	Transmitter Group	2-3
d.	Monitor Group	2-3
e.	Reeling Machine	2-3
2.	Circuit Analysis	2-5
a.	Receiver Group	2-5
b.	Distributor-Transmitter Group	2-7
c.	Power Supply PP-987/U	2-23
3.	Mechanical Analysis	2-24
a.	Reeling Machine RL-173/FGC	2-24
b.	Governed Motor	2-24
c.	Time Stamp MX-1527/U	2-26
	(1) Electrical Circuit	2-26
	(2) Drive Mechanism	2-27
	(3) Typewheels	2-28
	(4) Ribbon Feed Mechanism	2-30
d.	Teletypewriter Reperforator TT-161/FGC-38, TT-162/FGC-38X, TT-163/FGC-39, TT-164/FGC-38, TT-165/FGC-38X, or TT-166/FGC-39	2-31
	(1) Main Shaft	2-31
	(2) Rangefinder Mechanism	2-32
	(3) Selector Mechanism	2-33
	(4) Selection of a Character	2-34
	(5) Printing Mechanism	2-35
	(6) Printing of a Selected Character	2-36
	(7) Perforating Mechanism	2-36
	(8) Code Perforation	2-37
	(9) Selecting, Printing, and Perforating Operations	2-37
	(10) Spacing Mechanism	2-38
	(11) Ribbon Mechanism	2-38
	(12) Upper and Lower Case Shift Mechanism	2-39
	(13) Signal Bell Mechanism	2-40
	(14) Manual Tape Feed-out Lever	2-40
	(15) Automatic Tape Feed Out	2-40
	(16) Manual Tape Feed Out	2-42
	(17) Electrical Connections	2-42
e.	Message Distributor-Transmitters TT-167/FGC-38 and TT-168/FGC-39	2-43
	(1) Components	2-43
	(2) Cycle of Operation	2-43
f.	Numbering Distributor-Transmitters TT-169/FGC-38 and TT-170/FGC-39	2-49
	(1) Components	2-49
	(2) Cycle of Operation	2-49
g.	Mounting Bases MT-1369/FGC-38, MT-1370/FGC-38X, and MT-1371/FGC-39	2-51

LIST OF ILLUSTRATIONS

Figure	Title	Page
2-1	Automatic Telegraph Signal Code	2-0
2-2	Teletypewriter Sets AN/FGC-38, AN/FGC-38X, and AN/FGC-39, Functional Block Diagram	2-1
2-3	Receiver Groups OA-616/FGC-38, OA-619/FGC-38X, and OA-622/FGC-39, Partial Schematic	2-4
2-4	Receiver Groups OA-616/FGC-38, OA-619/FGC-38X, and OA-622/FGC-39 Tape Feed-out Circuit, Simplified Schematic	2-7
2-5	Signal Line Circuit for Spare Position	2-8
2-6	Simplified Schematic of Spare Circuit Patched into Signal Line Circuit	2-9
2-7	Distributor-Transmitter Group, Signal Line and Open Line Alarm Lamps, Simplified Schematic	2-10
2-8	Operating Circuits of K-209, Simplified Schematic	2-11
2-9	Operating Circuits of K-210, Simplified Schematic	2-11
2-10	Operating Circuits of K-204 and K-207 when Upper Message Distributor-Transmitter Release Bar is Unlatched and End of Tape Contact is Closed	2-12
2-11	Operating Circuits of K-202 during Transmission from Lower Distributor-Transmitter	2-13

LIST OF ILLUSTRATIONS—(Cont'd)

Figure	Title	Page
2-12	Operating Circuits of K-203 and the Numbering Distributor-Transmitter Clutch Magnet during Transmission from Lower Message Distributor-Transmitter	2-14
2-13	Upper Distributor-Transmitter Clutch Magnet Circuits	2-15
2-14	Lower Distributor-Transmitter Clutch Magnet Circuits	2-16
2-15	Operating Circuits of K-205 and K-207 when Lower Message Distributor-Transmitter is Operated	2-17
2-16	Operating Circuits of K-207 and K-203 prior to Transmission from Rerun Transmitter at Monitor Group	2-18
2-17	Auxiliary Distributor-Transmitter Operating Circuit	2-19
2-18	Operating Circuit of Heel End Winding of K-202 with Release Bar in Latched Position	2-23
2-19	Power Supply PP-987/U, Schematic Diagram	2-24
2-20	Motor Driven Tape Reeling Machine RL-173/FGC, Gear Train Diagram	2-25
2-21	Schematic Diagram of Governed Motor Circuit	2-26
2-22	Schematic Diagram of Time Stamp MX-1257/U	2-26
2-23	Initial Application of Power to Time Stamp MX-1527/U	2-27
2-24	Minute Drive Assembly	2-27
2-25	Push Pawl in Retracted Position	2-28
2-26	Typewheel in Advanced Position	2-28
2-27	Push Pawl Disengaging Lock Lever	2-29
2-28	Push Pawl Engaging Lock Lever	2-29
2-29	Variable Month Change Mechanism	2-30
2-30	Ribbon Feed Mechanism	2-31
2-31	Main Shaft Assembly	2-32
2-32	Rangefinder Assembly	2-33
2-33	Selector Mechanism	2-33
2-34	Locking Lever and Locking Wedge	2-34
2-35	Printing Mechanism	2-35
2-36	Code Bar Locking Lever	2-36
2-37	Perforating Mechanism	2-37
2-38	Spacing Mechanism	2-38
2-39	Ribbon Mechanism	2-38
2-40	Ribbon Reverse Mechanism	2-39
2-41	Upper and Lower Case Shift Mechanism	2-39
2-42	Signal Bell Mechanism	2-40
2-43	Automatic Tape Feed Out, Main Shaft and Clutch Assembly	2-41
2-44	Control Magnet and Worm Follower	2-42
2-45	Tape Feed-out Mechanism, End View	2-42
2-46	Cam Placement on Transmitting Camshaft	2-43
2-47	Clutch Assembly	2-43
2-48	Clutch Disengaged	2-44
2-49	Clutch Engaged	2-44
2-50	Selector Lever Bail and Roller	2-45
2-51	Selector Lever in the Marking Position	2-45
2-52	Contact Lever Riding in Detent of Cam	2-46
2-53	Selector Lever in the Spacing Position	2-46
2-54	Feed Roller on High Side of Cam	2-46
2-55	Tape Feed Ratchet Advancing	2-47
2-56	Tape Feed Ratchet in Advanced Position	2-47
2-57	Automatic Tape-out Contact	2-47
2-58	Manual Tape-out Contact	2-48
2-59	Tape-out Sensing Lever Pin	2-48
2-60	Tape-out Sensing Mechanism	2-49
2-61	Release Bar in Latched and Unlatched Position	2-49
2-62	Selector Levers Blocking Vertical Extension of Letters Operating Lever	2-50
2-63	Letters Operating Lever on High Side of Cam	2-50
2-64	Letters Operating Lever on Low Side of Cam	2-50

LIST OF TABLES

Table	Title	Page
2-1	Receiver Group Timing Diagram	2-6
2-2	Transmitter Group Timing Diagram	2-21

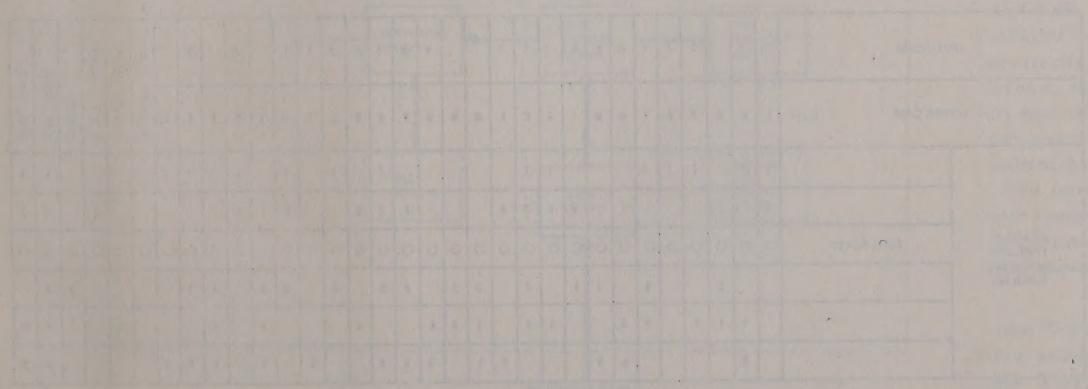

SECTION 2
THEORY OF OPERATION

1. GENERAL DESCRIPTION.

a. GENERAL.—This section covers the operating principles and circuit descriptions of Teletypewriter Sets AN/FGC-38, AN/FGC-38X, and AN/FGC-39. Each equipment serves as a relay station for transmitting, and monitoring, and receiving messages to and from remote points. Teletypewriter Sets AN/FGC-38 and AN/FGC-38X are supplied to receive and transmit messages at 60 wpm on the 7.42 unit code but may be changed to 75 or 100 wpm by changing gears and parts. Teletypewriter Set AN/FGC-39 receives and transmits 65 wpm only (390 OPM) on the 7.00 unit code. Teletypewriter Sets AN/FGC-38 and AN/FGC-39 use synchronous motors which require 115 volts (plus or minus 10 percent), 60-cycle, single-phase, alternating current. To avoid loss of receiving margin with the synchronous motor, the frequency regulation must be within plus or minus one-half cycle. Teletypewriter Set AN/FGC-38X uses a governed motor and requires a similar power supply except that the frequency may be from 50 to 60 cycles. All sets are supplied to receive and transmit either neutral signals at 60 ma or polar signals at 30 ma.

Each character (letter, number, or symbol) of the automatic telegraph signaling code consists of seven elements. The neutral signal is a make-break (nominally 60 ma) signal. The polar signal is a current reversal (nominally 30 ma) signal. The first element of a character, the START element, to which the line relay responds, is a spacing element one unit long. The next five elements are marking or spacing elements according to the character transmitted (see figure 2-1) with a duration of one unit of time. The last element, the STOP element, is a marking element of 1.42 units of duration. For 390 OPM, the STOP element is a marking element of one unit duration. The length of the unit of duration is determined by the speed of reception, 60, 75, or 100 words per minute, except AN/FGC-39 which operates at 65 words per minute (390 OPM) only. These seven elements are received in sequential order. The figures combination moves the platen so that the figures part of the type pallet prints, and the letters combination moves the platen back to the letters printing position. The reperforators use the upper case S combination to ring a bell, C. R. for carriage return, and L.F. for line feed. The space combination is sent between words.

b. RECEIVER GROUP.—The receiver group receives telegraph signals from three separate incoming lines and converts them to perforations and printing on the tape. There are three separate operating circuits, one for each line, and one spare circuit which operate independently of each other. Each circuit contains a relay system, line jacks, a typing reperforator, and an OPEN LINE alarm lamp. The spare reperforator may be plugged into any circuit to supplement or replace the function of one reperforator for replenishing tape or other maintenance purposes. Four (two front and two rear) TAPE OUT lamps in the receiver group in-

| | | |

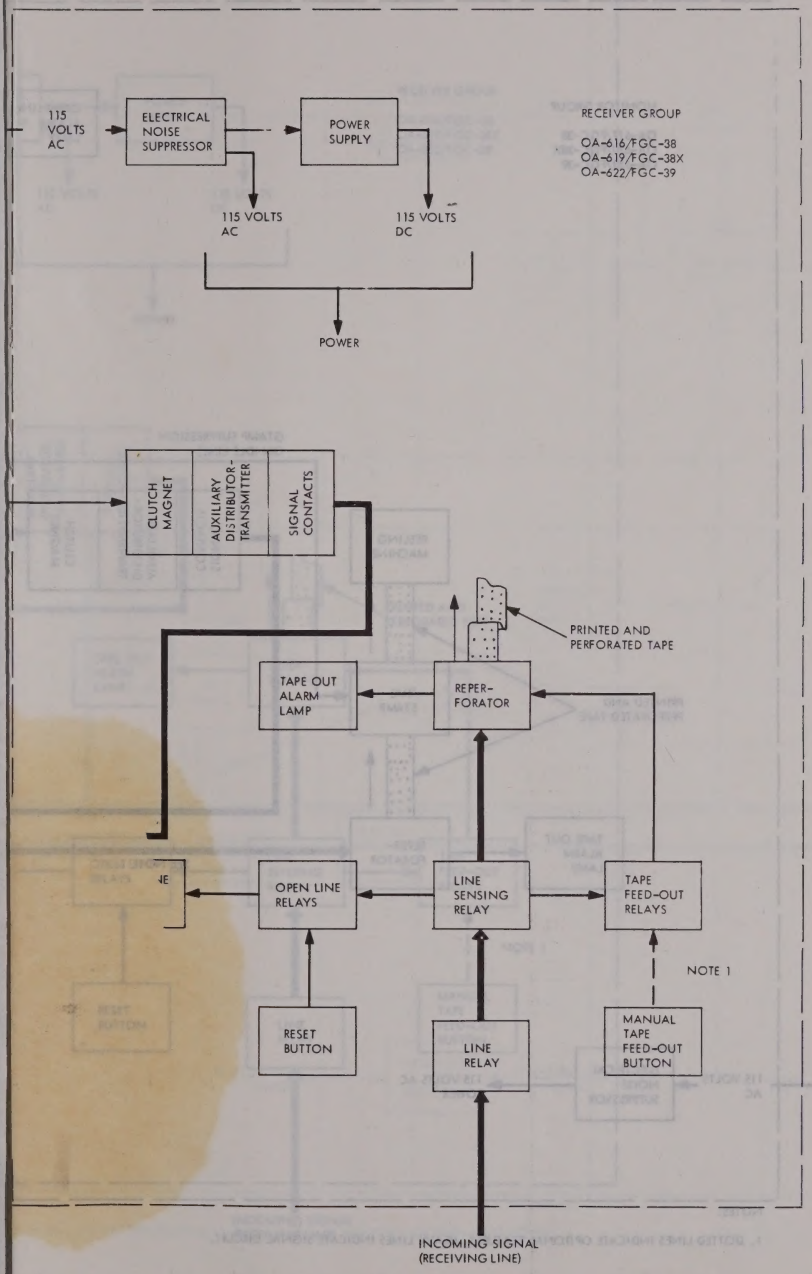

Figure 2–2. Teletypewriter Sets AN/FGC-38, AN/FGC-38X, and AN/FGC-39, Functional Block Diagram

SECTION 2
THEORY OF OPERATION

1. GENERAL DESCRIPTION.

a. GENERAL.—This section covers the operating principles and circuit descriptions of Teletypewriter Sets AN/FGC-38, AN/FGC-38X, and AN/FGC-39. Each equipment serves as a relay station for transmitting, and monitoring, and receiving messages to and from remote points. Teletypewriter Sets AN/FGC-38 and AN/FGC-38X are supplied to receive and transmit messages at 60 wpm on the 7.42 unit code but may be changed to 75 or 100 wpm by changing gears and parts. Teletypewriter Set AN/FGC-39 receives and transmits 65 wpm only (390 OPM) on the 7.00 unit code. Teletypewriter Sets AN/FGC-38 and AN/FGC-39 use synchronous motors which require 115 volts (plus or minus 10 percent), 60-cycle, single-phase, alternating current. To avoid loss of receiving margin with the synchronous motor, the frequency regulation must be within plus or minus one-half cycle. Teletypewriter Set AN/FGC-38X uses a governed motor and requires a similar power supply except that the frequency may be from 50 to 60 cycles. All sets are supplied to receive and transmit either neutral signals at 60 ma or polar signals at 30 ma.

Each character (letter, number, or symbol) of the automatic telegraph signaling code consists of seven elements. The neutral signal is a make-break (nominally 60 ma) signal. The polar signal is a current reversal (nominally 30 ma) signal. The first element of a character, the START element, to which the line relay responds, is a spacing element one unit long. The next five elements are marking or spacing elements according to the character transmitted (see figure 2-1) with a duration of one unit of time. The last element, the STOP element, is a marking element of 1.42 units of duration. For 390 OPM, the STOP element is a marking element of one unit duration. The length of the unit of duration is determined by the speed of reception, 60, 75, or 100 words per minute, except AN/FGC-39 which operates at 65 words per minute (390 OPM) only. These seven elements are received in sequential order. The figures combination moves the platen so that the figures part of the type pallet prints, and the letters combination moves the platen back to the letters printing position. The reperforators use the upper case S combination to ring a bell, C. R. for carriage return, and L.F. for line feed. The space combination is sent between words.

b. RECEIVER GROUP.—The receiver group receives telegraph signals from three separate incoming lines and converts them to perforations and printing on the tape. There are three separate operating circuits, one for each line, and one spare circuit which operate independently of each other. Each circuit contains a relay system, line jacks, a typing reperforator, and an OPEN LINE alarm lamp. The spare reperforator may be plugged into any circuit to supplement or replace the function of one reperforator for replenishing tape or other maintenance purposes. Four (two front and two rear) TAPE OUT lamps in the receiver group in-

	UPPER CASE	-	?	:	S	3	!	&	£	8	'	(	)	.	,	9	ø	1	4	🔔	5	7	;	2	/	6	"	≈	<	≡			
	LOWER CASE	A	B	C	D	E	F	G	H	I	J	K	L	M	N	O	P	Q	R	S	T	U	V	W	X	Y	Z	(BLANK)	(C.R.)	(L.F.)	(SPACE)	(LTR. SHIFT)	(FIG. SHIFT)
NUMBERS INDICATE MARKING IMPULSES		1	1		1	1	1				1	1						1		1		1		1	1	1	1					1	1
		2		2				2		2	2	2	2				2	2	2			2	2	2						2		2	2
	FEED HOLES	O	O	O	O	O	O	O	O	O	O	O	O	O	O	O	O	O	O	O	O	O	O	O	O	O	O	O	O	O	O	O	O
				3			3		3	3		3		3	3		3	3		3		3	3		3	3						3	3	
			4	4	4		4	4			4	4		4	4	4			4				4		4				4			4	4
			5					5	5				5	5		5	5	5			5		5	5	5	5	5					5	5

Figure 2—1. Automatic Telegraph Signal Code

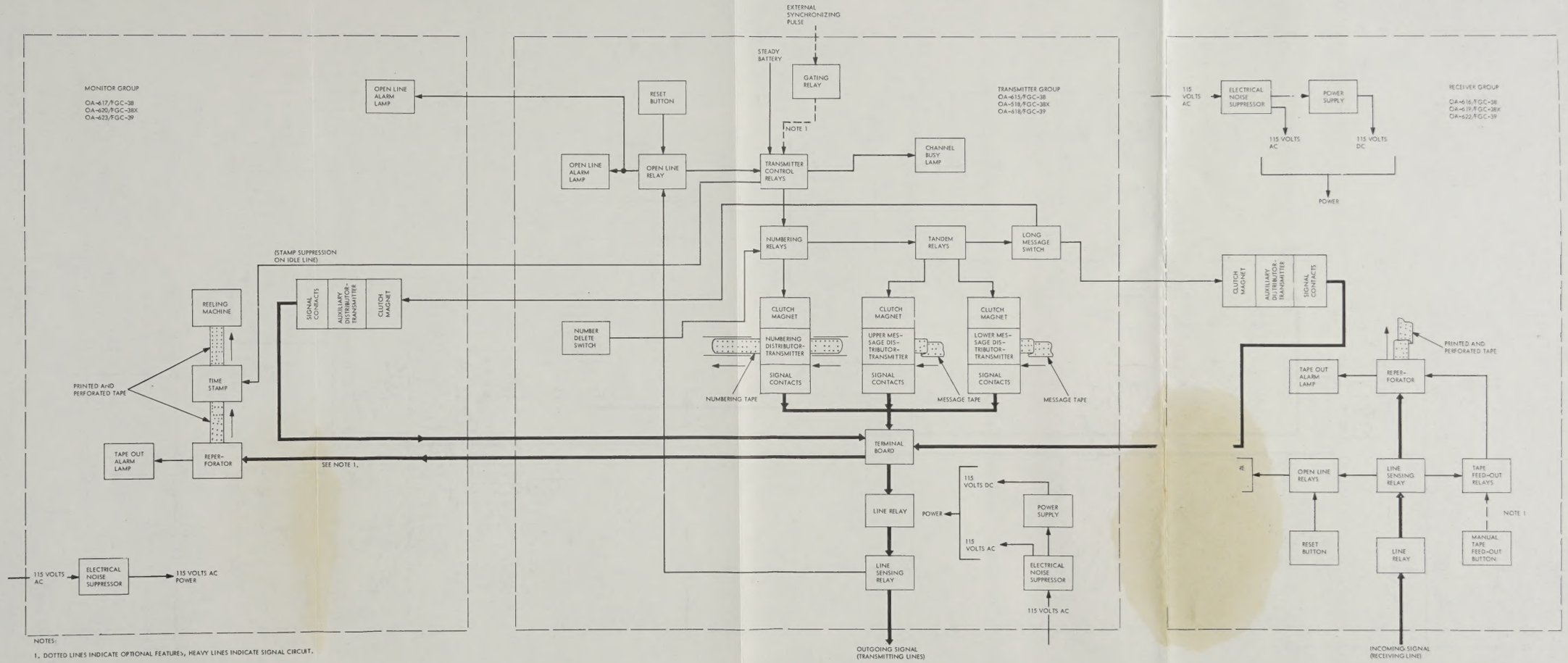

Figure 2–2. Teletypewriter Sets AN/FGC-38, AN/FGC-38X, and AN/FGC-39, Functional Block Diagram

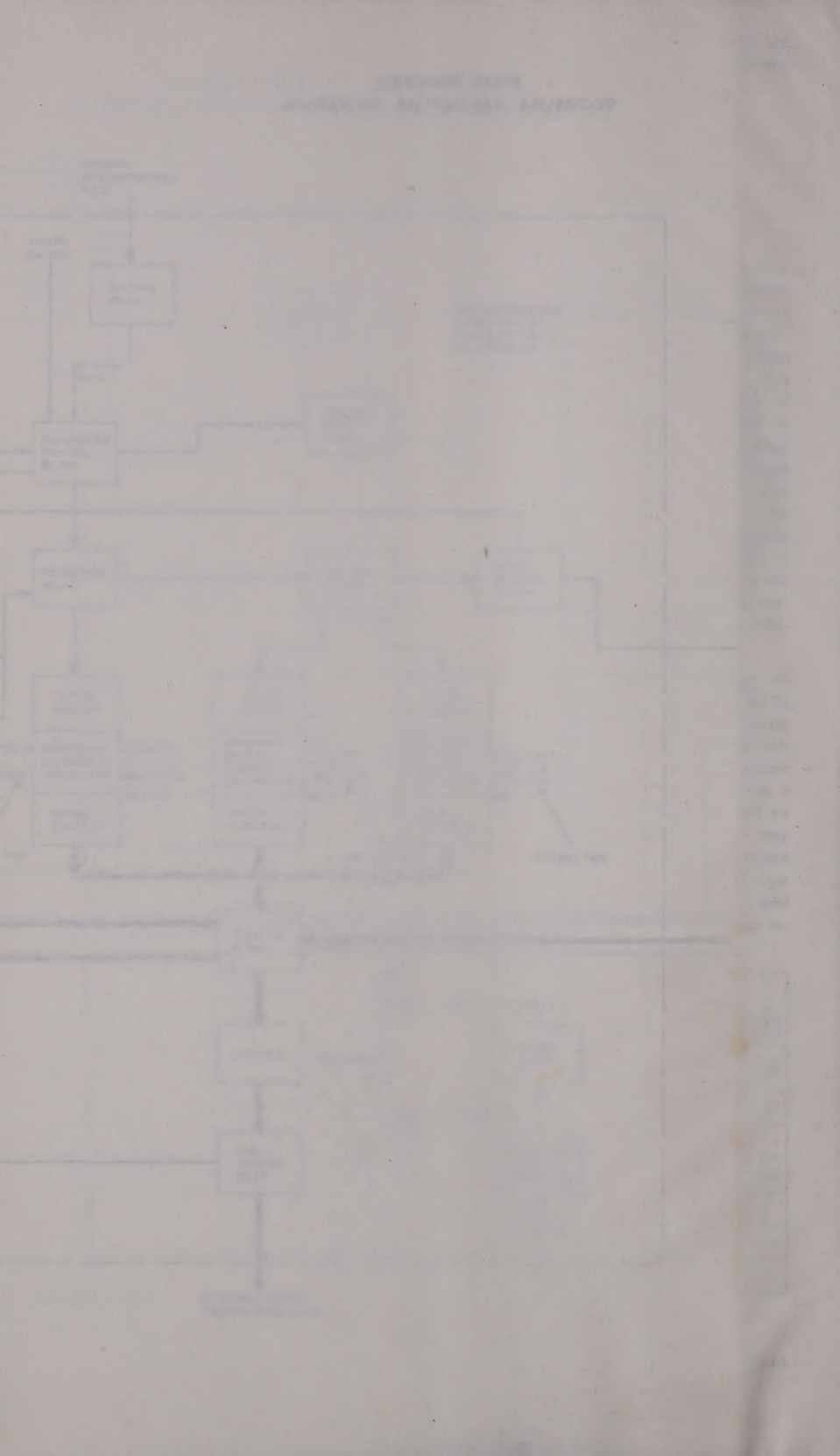

dicate when a reperforator is running out of tape. Four RESET buttons, similarly located, are used to restore the open line alarm circuits.

The line relay, the line sensing relay, and the reperforator receive the incoming signal (see figure 2-2). The incoming line is in a prolonged marking condition at the beginning of a message and every character. A prolonged spacing condition of the line for a period of approximately 170 milliseconds or more is indicated by the OPEN LINE alarm lamp. After the line has been restored, the open line RESET button must be depressed to extinguish the OPEN LINE alarm lamp. The POLAR-NEUTRAL switch conditions the line relay to receive either polar or neutral signals. The received signals are converted by the reperforator to perforations in the tape. At the end of transmission, the typing reperforator automatically feeds out a metered quantity of tape to bring the end of the message beyond the door of the cabinet to permit tearing off the tape without mutilating the message. The other two operating circuits are similarly arranged.

A TRANSMITTER CIRCUIT jack in the receiver group is used for long message transmission and is described in the transmitter group paragraph 1*c*. A power supply provides d-c voltage to the relays and reperforators.

c. TRANSMITTER GROUP.—The transmitter group distributes sequentially automatic telegraph signals from perforated tape to a maximum of three outgoing lines. The group contains three numbering distributor-transmitters, six message distributor-transmitters, BUSY and OPEN LINE alarm lamps, a RESET button, NUMBER-DELETE switches, three control panels, three line relays, and a patching frame, that may be associated with three outgoing lines. However, the operation of only one circuit is discussed. One d-c power supply is used in the transmitter group.

When the equipment is first turned on, power is applied to relays and the distributor-transmitters and the line relay is energized. The RESET button is then pushed and the OPEN LINE alarm lamp is extinguished if the line is intact. Assuming that message tapes have been inserted in the message distributor-transmitters, a number from the number tape is transmitted by the numbering distributor-transmitter, then the relay circuit switches the numbering distributor-transmitter out of operation and sets a tandem message distributor-transmitter in operation. The message on the tape in that message distributor-transmitter is then transmitted. At the end of this message, the relay system again activates the numbering distributor-transmitter to transmit the next number and activates the other message distributor-transmitter to transmit the second message. At the end of this message, the numbering distributor-transmitter is again activated, provided there is a message in the first message distributor-transmitter. This is referred to as tandem operation of two transmitters on one line.

The number may be deleted, without changing the operation of the remaining circuitry, by holding the NUMBER-DELETE switch on the front panel in the DELETE position during the period the numbering distributor-transmitter normally operates.

If a long message is to be transmitted, a specially wired auxiliary distributor-transmitter (not furnished as part of the AN/FGC-38, AN/FGC-38X, or AN/FGC-39) is brought up to the receiver group cabinet and the plug from the auxiliary unit is placed in the TRANSMITTER CIRCUIT jack. The NORMAL-LONG MESSAGE switch at the transmitter group selected is placed in the LONG MESSAGE position to perform the required switching for this operation. Do not place the NORMAL-LONG MESSAGE switch in the LONG MESSAGE position during a monitor rerun. The message tape is then brought out from the reperforator to the auxiliary unit and transmitted directly at the receiver group.

The LONG MESSAGE feature is designed to transmit from any one receiving group to any one, and only one, sending circuit.

An external synchronizing pulse may be used, if desired, for synchronization of the distributor-transmitters and auxiliary equipment (not furnished as part of the AN/FGC-38, AN/FGC-38X, or AN/FGC-39).

d. MONITOR GROUP.—The monitor group records the message sent out by the distributor-transmitters and stamps the time and date on the tape each minute. (No time stamps are provided for AN/FGC-38X. The tape from this reperforator feeds directly to the reeling machine.) The monitor group contains three reperforators, three time stamps (except in AN/FGC-38X), three reeling machines, three OPEN LINE alarm lamps, three TAPE OUT lamps, three TRANSMITTER LOCKED-NORMAL switches, and three RERUN TRANSMITTER CIRCUIT jacks. There are three separate circuits, comprised of one each of the above components, to operate independently of each other and with each of the three transmitting circuits in the transmitter group. The reperforators record the messages transmitted by the associated distributor-transmitter units. The tape passes from the reperforator through the time stamp and is wound by the reeling machine. (No time stamp is used in AN/FGC-38X). When transmission ceases the time stamp is not actuated.

e. REELING MACHINE.—The Motor Driven Tape Reeling Machine RL-173/FGC in the monitor group reels and stores the monitor tape on large rolls. There are three reeling machines, one for each reperforator, mounted with the reperforator and time stamp on each

NAVSHIPS 92378 AN/FGC-38, AN/FGC-38X, AN/FGC-39
NAVSHIPS 92378 AN/FGC-38, AN/FGC-38X, AN/FGC-39
NAVSHIPS 92378 AN/FGC-38, AN/FGC-38X, AN/FGC-39

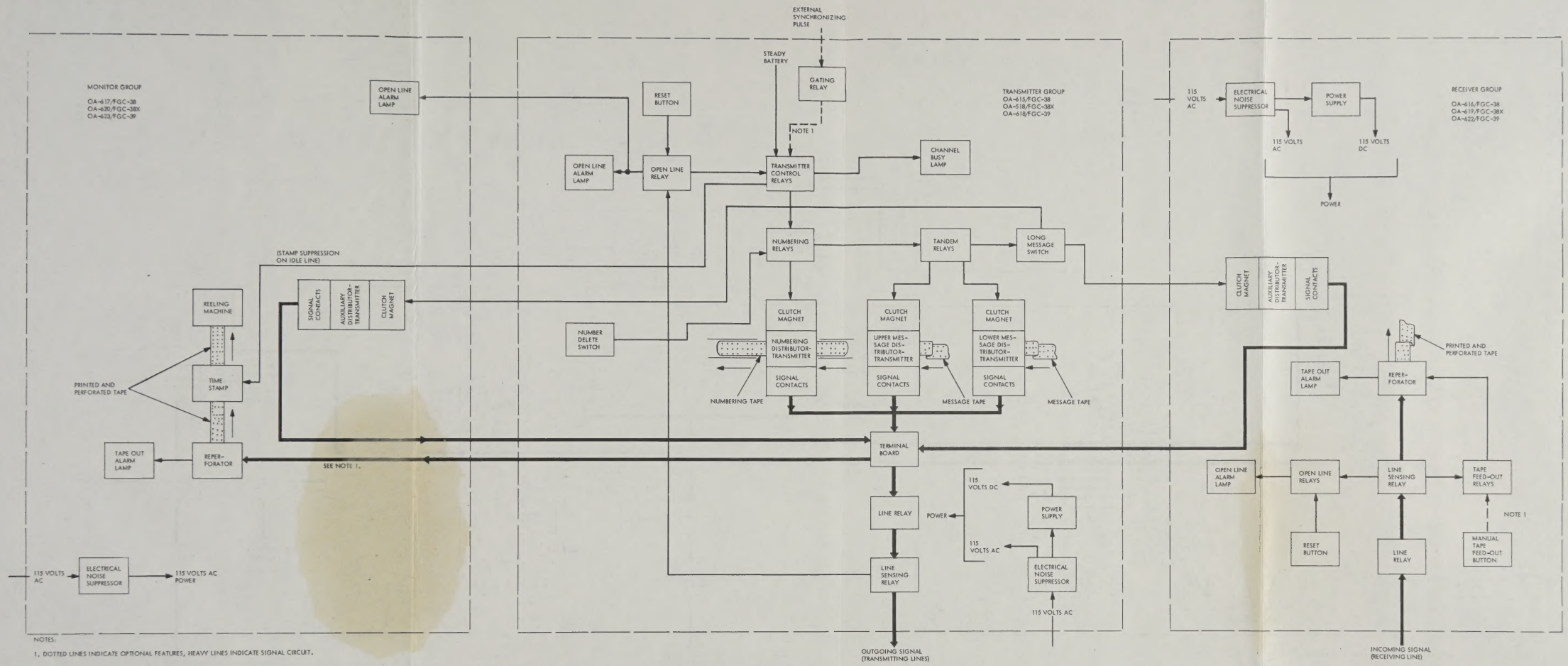

NOTES:

1. DOTTED LINES INDICATE OPTIONAL FEATURES, HEAVY LINES INDICATE SIGNAL CIRCUIT.

Figure 2–2. Teletypewriter Sets AN/FGC-38, AN/FGC-38X, and AN/FGC-39, Functional Block Diagram

dicate when a reperforator is running out of tape. Four RESET buttons, similarly located, are used to restore the open line alarm circuits.

The line relay, the line sensing relay, and the reperforator receive the incoming signal (see figure 2-2). The incoming line is in a prolonged marking condition at the beginning of a message and every character. A prolonged spacing condition of the line for a period of approximately 170 milliseconds or more is indicated by the OPEN LINE alarm lamp. After the line has been restored, the open line RESET button must be depressed to extinguish the OPEN LINE alarm lamp. The POLAR-NEUTRAL switch conditions the line relay to receive either polar or neutral signals. The received signals are converted by the reperforator to perforations in the tape. At the end of transmission, the typing reperforator automatically feeds out a metered quantity of tape to bring the end of the message beyond the door of the cabinet to permit tearing off the tape without mutilating the message. The other two operating circuits are similarly arranged.

A TRANSMITTER CIRCUIT jack in the receiver group is used for long message transmission and is described in the transmitter group paragraph 1*c*. A power supply provides d-c voltage to the relays and reperforators.

c. TRANSMITTER GROUP.—The transmitter group distributes sequentially automatic telegraph signals from perforated tape to a maximum of three outgoing lines. The group contains three numbering distributor-transmitters, six message distributor-transmitters, BUSY and OPEN LINE alarm lamps, a RESET button, NUMBER-DELETE switches, three control panels, three line relays, and a patching frame, that may be associated with three outgoing lines. However, the operation of only one circuit is discussed. One d-c power supply is used in the transmitter group.

When the equipment is first turned on, power is applied to relays and the distributor-transmitters and the line relay is energized. The RESET button is then pushed and the OPEN LINE alarm lamp is extinguished if the line is intact. Assuming that message tapes have been inserted in the message distributor-transmitters, a number from the number tape is transmitted by the numbering distributor-transmitter, then the relay circuit switches the numbering distributor-transmitter out of operation and sets a tandem message distributor-transmitter in operation. The message on the tape in that message distributor-transmitter is then transmitted. At the end of this message, the relay system again activates the numbering distributor-transmitter to transmit the next number and activates the other message distributor-transmitter to transmit the second message. At the end of this message, the numbering distributor-transmitter is again activated, provided there is a message in the first message distributor-transmitter. This is referred to as tandem operation of two transmitters on one line.

The number may be deleted, without changing the operation of the remaining circuitry, by holding the NUMBER-DELETE switch on the front panel in the DELETE position during the period the numbering distributor-transmitter normally operates.

If a long message is to be transmitted, a specially wired auxiliary distributor-transmitter (not furnished as part of the AN/FGC-38, AN/FGC-38X, or AN/FGC-39) is brought up to the receiver group cabinet and the plug from the auxiliary unit is placed in the TRANSMITTER CIRCUIT jack. The NORMAL-LONG MESSAGE switch at the transmitter group selected is placed in the LONG MESSAGE position to perform the required switching for this operation. Do not place the NORMAL-LONG MESSAGE switch in the LONG MESSAGE position during a monitor rerun. The message tape is then brought out from the reperforator to the auxiliary unit and transmitted directly at the receiver group.

The LONG MESSAGE feature is designed to transmit from any one receiving group to any one, and only one, sending circuit.

An external synchronizing pulse may be used, if desired, for synchronization of the distributor-transmitters and auxiliary equipment (not furnished as part of the AN/FGC-38, AN/FGC-38X, or AN/FGC-39).

d. MONITOR GROUP.—The monitor group records the message sent out by the distributor-transmitters and stamps the time and date on the tape each minute. (No time stamps are provided for AN/FGC-38X. The tape from this reperforator feeds directly to the reeling machine.) The monitor group contains three reperforators, three time stamps (except in AN/FGC-38X), three reeling machines, three OPEN LINE alarm lamps, three TAPE OUT lamps, three TRANSMITTER LOCKED-NORMAL switches, and three RERUN TRANSMITTER CIRCUIT jacks. There are three separate circuits, comprised of one each of the above components, to operate independently of each other and with each of the three transmitting circuits in the transmitter group. The reperforators record the messages transmitted by the associated distributor-transmitter units. The tape passes from the reperforator through the time stamp and is wound by the reeling machine. (No time stamp is used in AN/FGC-38X). When transmission ceases the time stamp is not actuated.

e. REELING MACHINE.—The Motor Driven Tape Reeling Machine RL-173/FGC in the monitor group reels and stores the monitor tape on large rolls. There are three reeling machines, one for each reperforator, mounted with the reperforator and time stamp on each

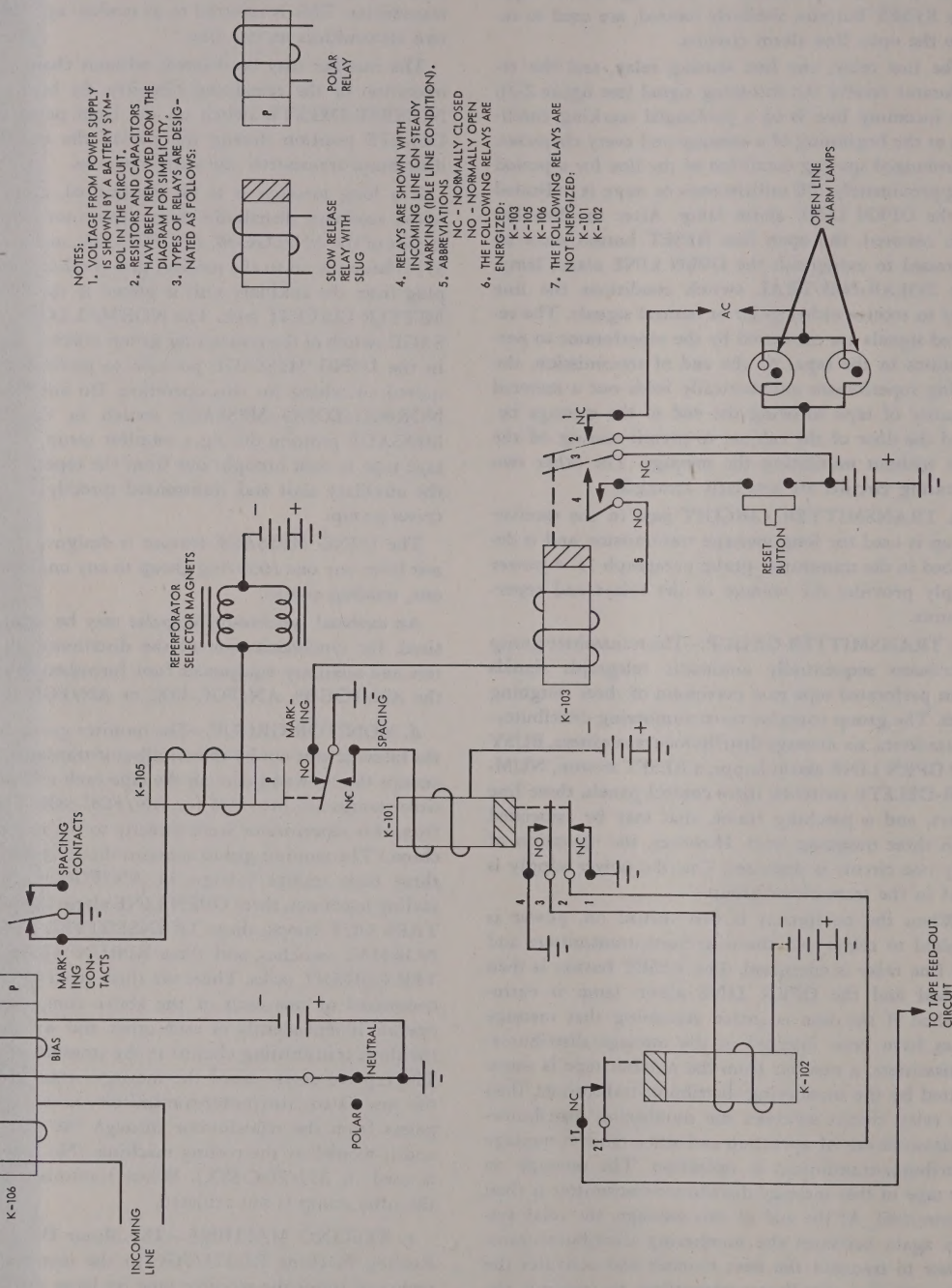

Figure 2–3. Receiver Groups OA-616/FGC-38, OA-619/FGC-38X, and OA-622/FGC-39, Partial Schematic

shelf in the monitor cabinet. The a-c shaded-pole motor, operated by the ON-OFF switch on the reeling frame, drives the tape take-up reel through a speed-reduction gear train. The gear train includes a clutch system. The rotation of the take-up reel is controlled by the slack or tautness of the tape. This makes the reeling machine self-adjusting to the recording speed.

2. CIRCUIT ANALYSIS.

a. RECEIVER GROUP.—Initial application of power to the receiver group energizes the OPEN LINE alarm lamp and the power supply which supplies current to the bias winding of K-106 (the line relay) and K-101. At the outset, a marking signal is on the incoming line which energizes the signal winding of K-106. The marking contacts of K-106 complete the circuit through K-105 and the selector magnets of the reperforator. The normally open contacts (marking) of K-105, now energized, partially complete the circuit of K-103 and de-energize K-101. K-101, in restoring, will complete the circuit to the reperforator tape feed-out mechanism causing a metered amount of tape to be fed out. The open line RESET button is now depressed. Pushing the RESET button fully completes the circuit of K-103. The normally closed contacts (1 and 2) of K-103, now energized, open the circuit of the OPEN LINE alarm lamp. The make-contacts (3 and 5) of the make-before-break contacts (3, 4, and 5) of K-103 place a holding circuit on the relay. K-103 is a slow release relay of approximately 170 milliseconds so that it does not de-energize during the spacing signals of a message. The circuit is now ready to receive a message (see figure 2-3). The first signal, the START signal, is a spacing impulse which causes the armature of K-106 to move from the marking to spacing contact, which in turn de-energizes K-105 and the selector magnets of the reperforator. K-101 is energized through the normally closed (spring biased) contacts (spacing) of K-105. K-101 is a slow release relay that de-energizes only after a prolonged marking condition on the signal line. This energizes K-102, a slow release relay, which also de-energizes only after a prolonged marking condition on the signal line. The next five signals are sent in accordance with the character. K-106 responds to these to energize and de-energize K-105 and the reperforator selector magnets. The selector magnets control the mechanisms in the reperforator to perforate and type the tape. The last signal, the STOP signal, is a marking impulse which conditions the reperforator to receive the next character.

At the end of the message or a group of messages, a prolonged marking condition may be on the signal line for a space of 500 milliseconds or more so that K-101 restores after its slow release time has passed, which opens the operating circuit of K-102 through the normally open contacts (3 and 4) of K-101. After the slow release time of K-102 has passed, it restores. The tape feed-out clutch magnet and control magnet of the typing reperforator then operate through the normally closed contacts of K-101 (1 and 2) and K-102 (1 and 2). Thus, clutch and control magnets operate only after the two relays, K-101 and K-102, restore. (For explanation of the tape feed-out circuit see paragraph 3*d* (15) of this section. This automatic tape feed-out mechanism may be changed to manual push-button feedout if a strap on the receiver group terminal block is removed (see figure 2-4). The timing diagram (table 2-1) illustrates the sequence of the above operations.

The circuit of the TAPE OUT lamps on the front and rear panels is completed by the closing of contacts actuated by a contact lever on the tape container. The contact lever closes the contacts when the tape falls below a predetermined level. The POLAR-NEUTRAL switch conditions the line relay to receive either polar or neutral signals.

The incoming signal line circuits (three-on-line, one spare) each contain two signal line jacks (front and rear), two reperforator jacks (front and rear), and the signal winding of a line relay K-106 (see figure 2-5). The jacks make possible the patching of a spare reperforator into any active (on-line) circuit. The circuit selected as a spare in the receiving group has no incoming signal lines connected to it. Designated terminals on the 120-point terminal board are strapped to provide for the extinguishing of the OPEN LINE alarm lamp.

When patching a spare reperforator into an active circuit, the patch cord is first placed into the spare REPERFORATOR jack. The contacts of the jack open the circuit to K-103 and complete the circuit through K-104. K-103, in releasing, completes the circuit to the OPEN LINE alarm lamp. K-104, in operating, completes the circuit to the motor of the spare reperforator.

The other end of the patch cord is then placed into the SIGNAL LINE jack of the active circuit. This places the signal winding of the line relay associated with the spare circuit in series with the signal winding of the line relay in the active circuit (see figure 2-6). The active reperforator may then be shut off and removed from the circuit, if desired, but the control panel associated with the active reperforator must be left in position to maintain a closed signal line. The open line RESET button, when depressed, will extinguish the OPEN LINE alarm lamp of the spare position.

To remove the spare reperforator from the circuit, reverse the above procedure. Remove the patch cord from the SIGNAL LINE jack and then from the REPERFORATOR jack. K-103 is de-energized and its contacts (1 and 2) complete the circuit to the OPEN LINE alarm lamp of the spare circuit. K-104 is de-energized and its contacts (1R and 2R) open the circuit to the

TABLE 2-1. RECEIVER GROUP TIMING DIAGRAM

UNIT	INITIAL APPLICATION OF POWER	MARKING SIGNAL ON RECEIVING LINE	DEPRESS RESET BUTTON	THE START SIGNAL	THE FIVE CODE SIGNALS OF A CHARACTER	THE STOP SIGNAL	IDLE LINE CONDITION OR END OF MESSAGE	
K-101	ENERGIZES	DE-ENERGIZES	DE-ENERGIZED	ENERGIZES	REMAINS ENERGIZED DUE TO THE SLOW RELEASE TIME OF RELAY		RESTORES AFTER SLOW RELEASE TIME HAS PASSED	DE-ENERGIZED
K-102	ENERGIZES	DE-ENERGIZES	DE-ENERGIZED	ENERGIZES	AS ABOVE		CIRCUIT REMAINS ENERGIZED UNTIL K-101 RESTORES	RESTORES AFTER SLOW RELEASE TIME OF RELAY
K-103	IN DE-ENERGIZED POSITION	ENERGIZING CIRCUIT PARTIALLY COMPLETED	ENERGIZES	REMAINS IN ENERGIZED POSITION DUE TO THE SLOW RELEASE TIME OF RELAY		ENERGIZED	ENERGIZED	ENERGIZED
K-104	IN DE-ENERGIZED POSITION THROUGH-OUT ALL NORMAL OPERATIONS							
K-105	IN DE-ENERGIZED POSITION	ENERGIZES	ENERGIZED	DE-ENERGIZES	ENERGIZES OR DE-ENERGIZES ACCORDING TO CODE OF CHARACTER (SEE FIG 2-1)	ENERGIZES	ENERGIZED	ENERGIZED
K-106	BIAS WINDING ENERGIZED (ONLY IF POLAR-NEUTRAL SWITCH IS IN NEUTRAL POSITION)	ASSUMES MARKING CONDITION	IN MARKING CONDITION	ASSUMES SPACING CONDITION	AS ABOVE	ASSUMES MARKING CONDITION	IN MARKING CONDITION	
REPERFORATOR SELECTOR MAGNET	IN DE-ENERGIZED POSITION (SPACING)	ENERGIZE (MARKING)	ENERGIZED	DE-ENERGIZE	AS ABOVE	ENERGIZES	ENERGIZED	
REPERFORATOR TAPE FEEDOUT CLUTCH	IN DE-ENERGIZED POSITION	*DE-ENERGIZED	*DE-ENERGIZED	DE-ENERGIZED	DE-ENERGIZED	DE-ENERGIZED	DE-ENERGIZED	*ENERGIZE. TAPE FED OUT WITH LETTERS COMBINATION PUNCHED AND TYPED
REPERFORATOR CONTROL MAGNETS	IN DE-ENERGIZED POSITION	*ENERGIZED	*ENERGIZED	DE-ENERGIZED	DE-ENERGIZED	DE-ENERGIZED	DE-ENERGIZED	
OPEN LINE ALARM LAMPS	LAMPS LIGHT	LIGHTED	EXTINGUISH	REMAINS EXTINGUISHED THRU-OUT OPER. CYCLE.				
				← 1 UNIT →	← 5 UNITS →	← 1.42 UNITS →	← 29 UNITS →	← 29 UNITS (OR MORE) →

TIME DURATION (NOT TO SCALE) ——→

*NOTE: CONTROL MAGNET ON REPERFORATORS ENERGIZED DURING STEADY MARKING CONDITION. CLUTCH MAGNET ENERGIZED UNTIL METERED LENGTH OF TAPE FED OUT.

TIME SCALE

WORDS PER MINUTE	TIME DURATION OF 1 UNIT (MILLI-SECONDS)
60	22
75	17
100	13

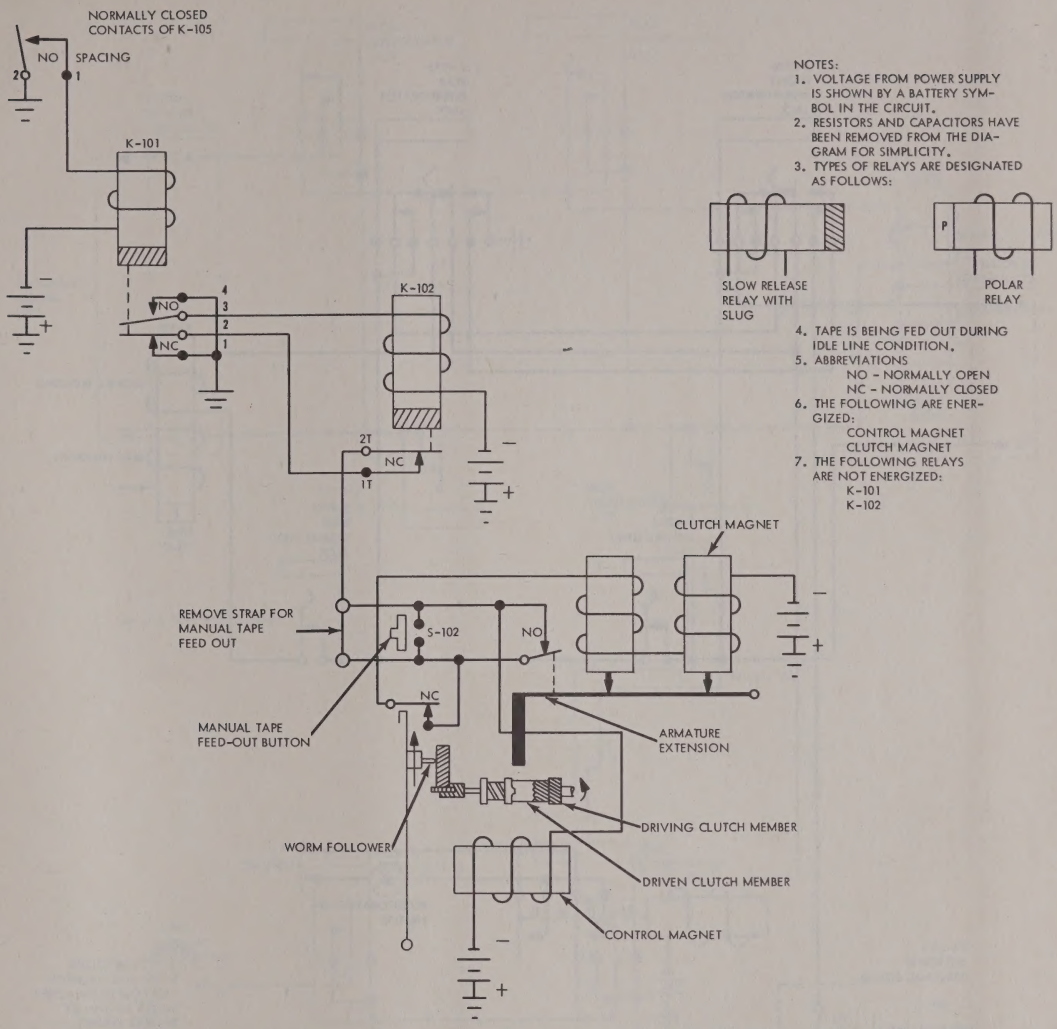

Figure 2–4. Receiver Groups OA-616/FGC-38, OA-619/FGC-38X, and OA-622/FGC-39 Tape Feed-out Circuit, Simplified Schematic

spare reperforator motor. The RESET button is then depressed to complete the operating circuit of K-103. K-103, in operating, opens the circuit contacts (1 and 2) to the OPEN LINE alarm lamp.

Contacts that place a short across the incoming signal line are provided on the REPERFORATOR jack so that a closed loop may be maintained should it become necessary to use an active position as a spare.

b. DISTRIBUTOR-TRANSMITTER GROUP.—The cabinet wiring and control elements of the distributor-transmitter group permit control of the clutch magnets of the distributor-transmitters from an external source when so desired. This external control is necessary when it is required to synchronize the output of the distributor-transmitters with external equipment which is not a part of AN/FGC-38, AN/FGC-38X or AN/FGC-39 equipments (see Section 3, paragraph 2*d*).

When this external control is applied, the clutch magnet of the distributor-transmitter is pulsed on a per-character basis. This rate (pulses per minute) of the synchronizing pulses is slower than the normal transmitting speed (characters per minute) of the distributor-transmitter. The transmitting shaft of the distributor-transmitter consequently comes to rest at the end of

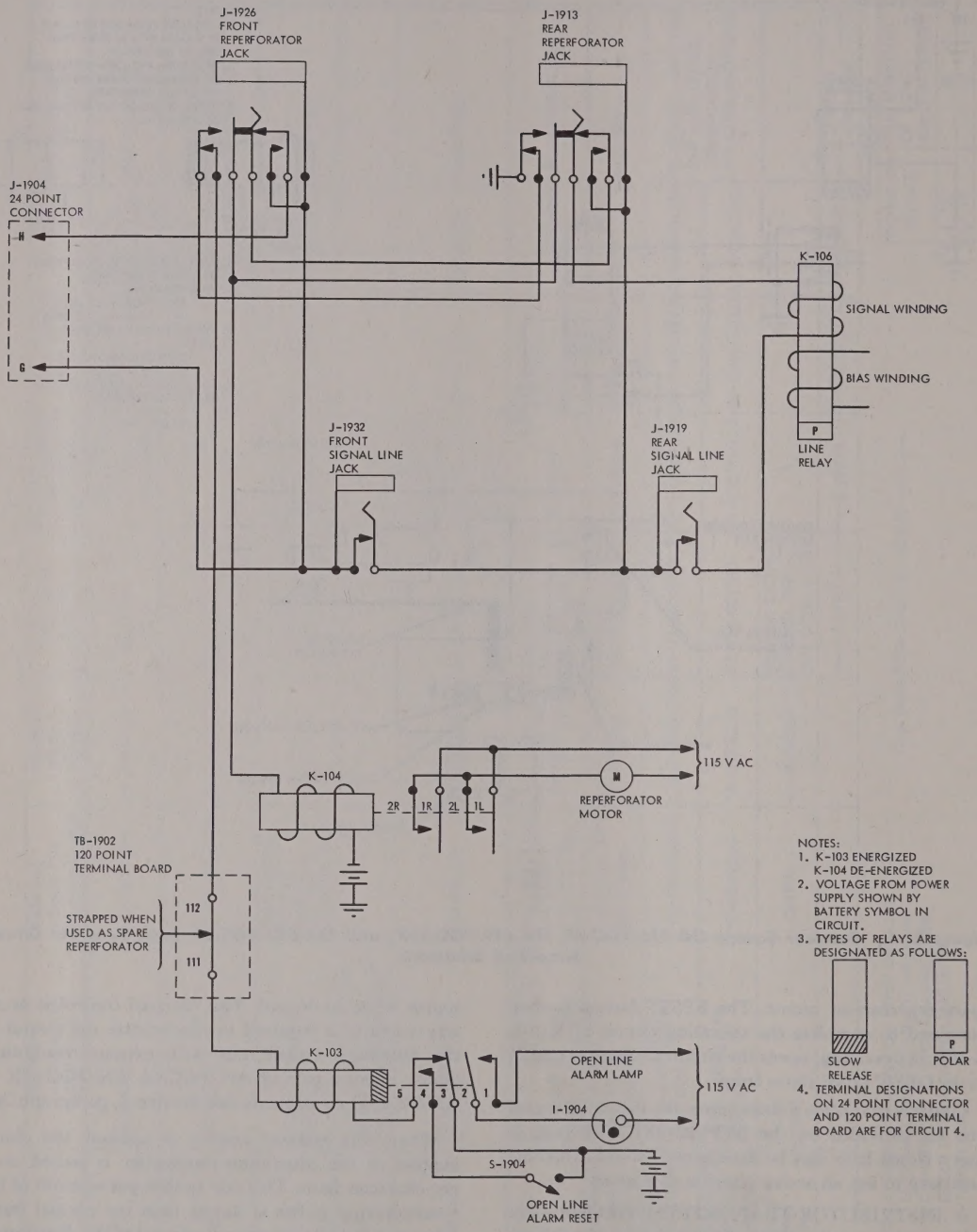

Figure 2–5. Signal Line Circuit for Spare Position

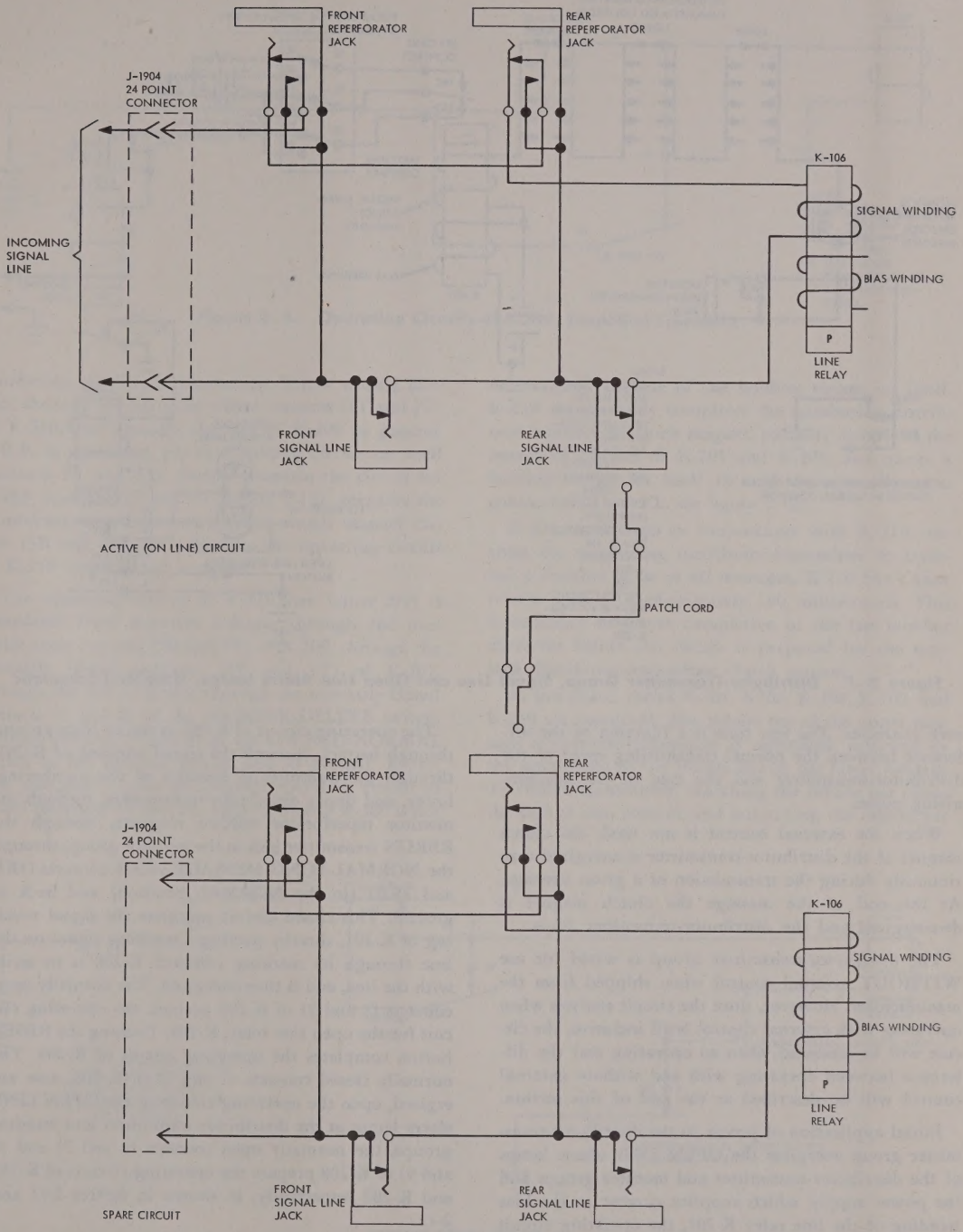

Figure 2–6. Simplified Schematic of Spare Circuit Patched into Signal Line Circuit

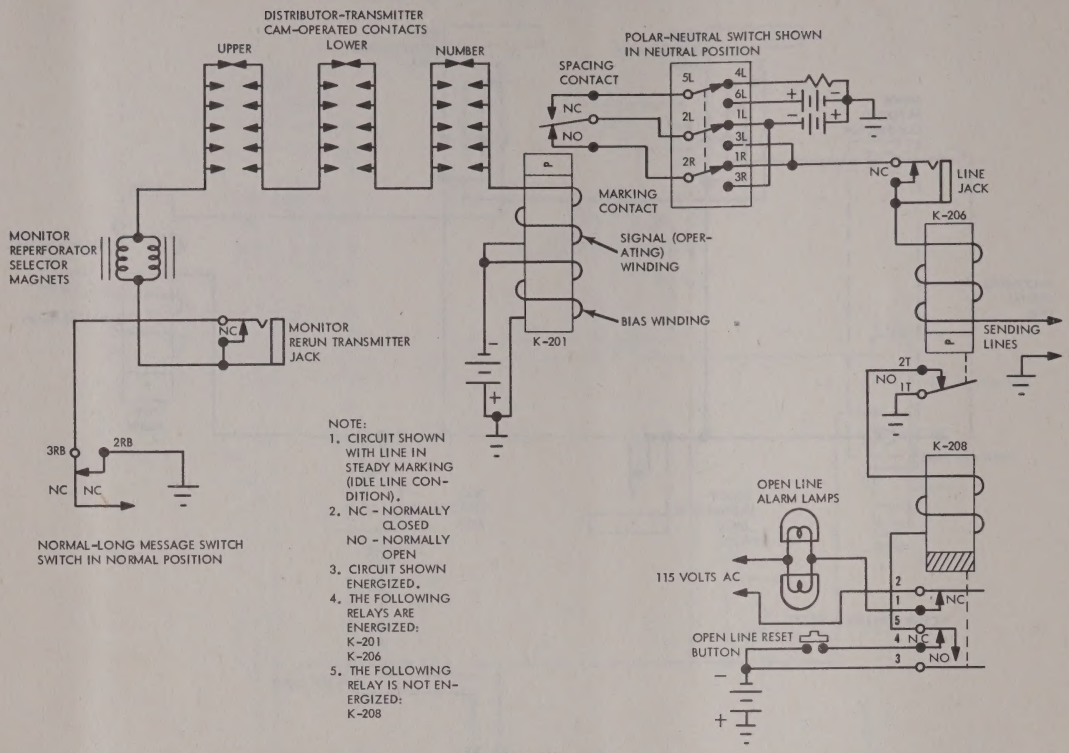

Figure 2–7. Distributor-Transmitter Group, Signal Line and Open Line Alarm Lamps, Simplified Schematic

each character. The rest time is a function of the difference between the normal transmitting speed of the distributor-transmitter and the rate of the synchronizing pulses.

When the external control is not used, the clutch magnet of the distributor-transmitter is energized continuously during the transmission of a given message. At the end of the message the clutch magnet is de-energized and the distributor-transmitter stops.

The distributor-transmitter group is wired for use WITHOUT external control when shipped from the manufacturer. However, since the circuit analysis when operating with external control is all inclusive, the circuit will be analyzed when so operating and the difference between operating with and without external control will be described at the end of this section.

Initial application of power to the distributor-transmitter group energizes the OPEN LINE alarm lamps of the distributor-transmitter and monitor groups and the power supply which supplies current to the bias winding of the line relay K-201, the operating circuit of K-201, and the operating circuit of K-209 (see figures 2-7 and 2-8).

The operating circuit of K-201 is traced from ground through battery, through the signal winding of K-201, through the transmitting contacts of the numbering, lower, and upper distributor-transmitters, through the monitor reperforator selector magnets, through the RERUN transmitter jack in the monitor group, through the NORMAL-LONG MESSAGE switch contacts (3RB and 2RB) (in the NORMAL position) and back to ground. This closed circuit energizes the signal winding of K-201, thereby putting a marking signal on the line through its marking contacts. K-206 is in series with the line, and is thus energized. The normally open contacts (1 and 2) of K-206 prepare the operating circuit for the open line relay, K-208. Pressing the RESET button completes the operating circuit of K-208. The normally closed contacts (1 and 2) of K-208, now energized, open the operating circuit of the OPEN LINE alarm lamps at the distributor-transmitter and monitor groups, the normally open contacts (6 and 7) and (8 and 9) of K-208 prepare the operating circuits of K-203 and K-202 respectively, as shown in figures 2-11 and 2-12.

The operating circuit of K-209 (see figure 2-8) is completed from the negative voltage, through the

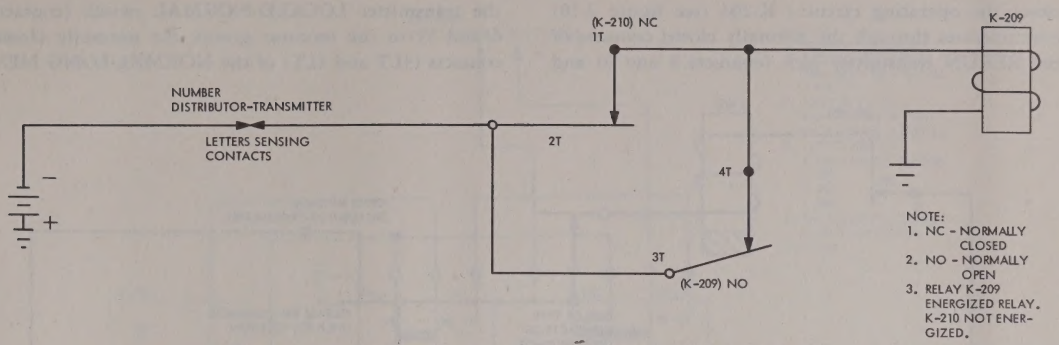

Figure 2–8. Operating Circuits of K-209, Simplified Schematic

numbering distributor-transmitter letters sensing contact, through the normally closed contacts (1T and 2T) of K-210, and through the coil of K-209 to ground. K-209, in operating, places a holding circuit on itself (contacts 3T and 4T), further prepares the circuit for K-203 (contacts 5T and 6T, figure 2-12), prepares the numbering distributor-transmitter clutch magnet circuit (3B and 4B) and completes the operating circuit of K-210 (contacts 5B and 6B).

The operating circuit of K-210 (see figure 2-9) is completed from negative voltage, through the normally open contacts (5B and 6B) of K-209, through the normally closed contacts (2T and 1T) of K-207, through the coil of K-210, through the normally closed contacts (1 and 2) of the NUMBER-DELETE switch, through contacts (5 and 6) of the LOCKED-NORMAL switch at the monitor group, and to ground. K-210, now energized, opens the original operating circuit of K-209 (contacts 1T and 2T, figure 2-8), but K-209 is not de-energized because of the holding circuit on itself. K-210 also partially completes the numbering distributor-transmitter clutch magnet, partially completes the operating circuits of K-205 and K-204, and places a holding circuit on itself through its normally open contacts (7T and 8T, see figure 2-12).

K-209, operating in conjunction with K-210, enables the numbering distributor-transmitter to transmit a number prior to all messages. K-210 has a slow release time of approximately 100 milliseconds. This is necessary to insure completion of the last number character before the circuit is prepared for the message distributor-transmitter clutch magnet.

At this point, relays K-201, K206, K-208, K-209, and K-210 are energized. The release bar of the upper message distributor-transmitter is unlatched, followed by the unlatching of the release bar of the lower message distributor-transmitter. (Latching the release bar closes the end of tape contact, and unlatching the release bar

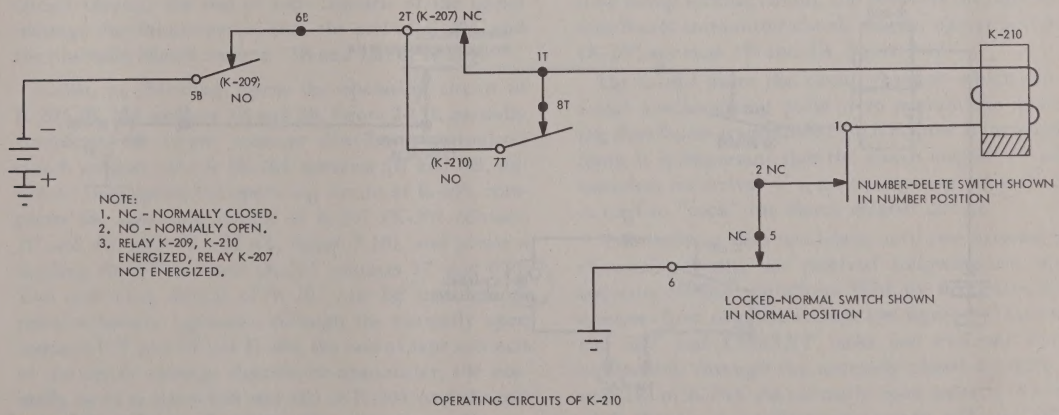

Figure 2–9. Operating Circuits of K-210, Simplified Schematic

closes the operating circuit.) K-204 (see figure 2-10) now operates through the normally closed contacts of the RERUN transmitter jack (contacts 8 and 9) and the transmitter LOCKED-NORMAL switch (contacts 6 and 7) in the monitor group, the normally closed contacts (3LT and 4LT) of the NORMAL-LONG MES-

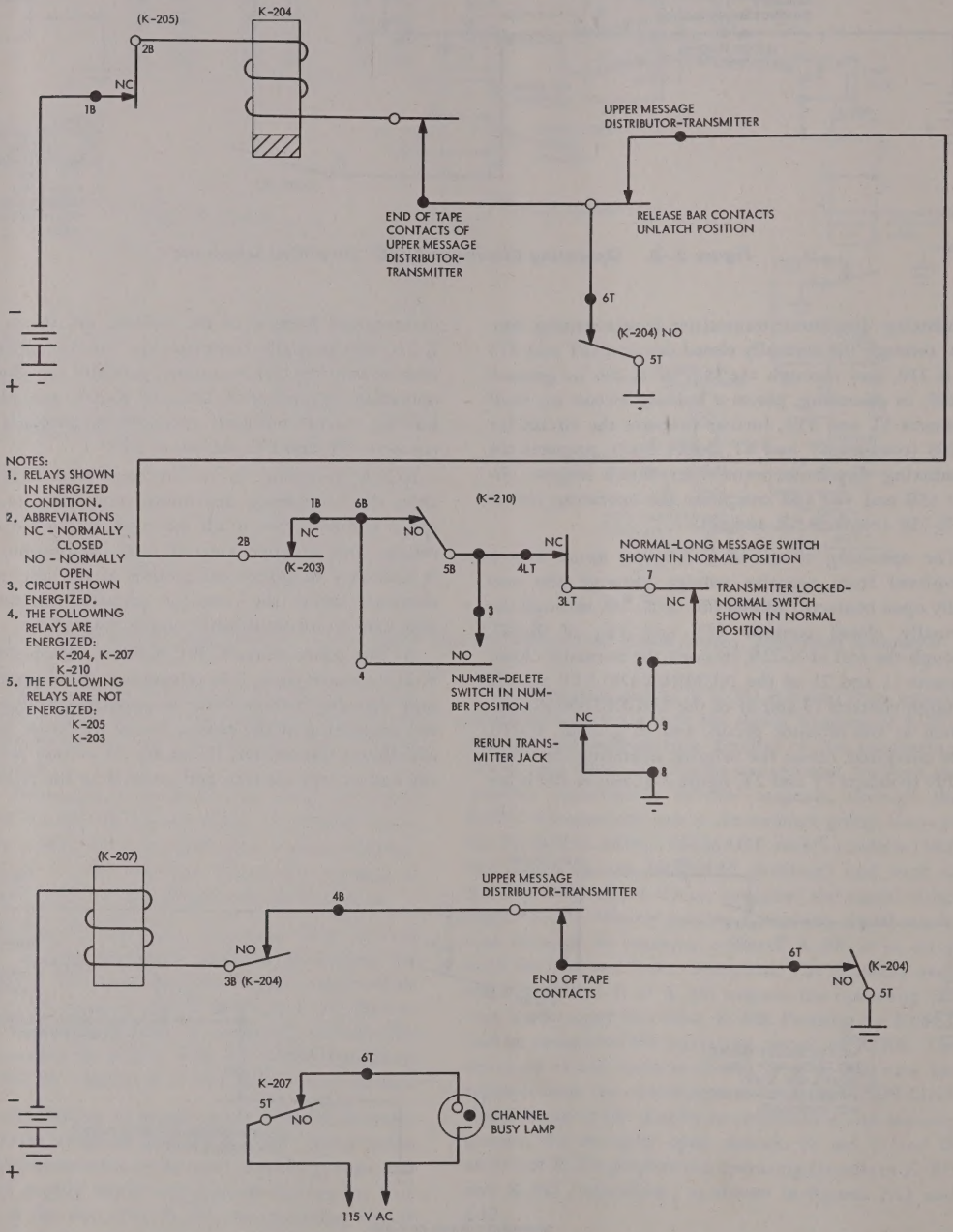

Figure 2—10. Operating Circuits of K-204 and K-207 when Upper Message Distributor-Transmitter Release Bar is Unlatched and End of Tape Contact is Closed

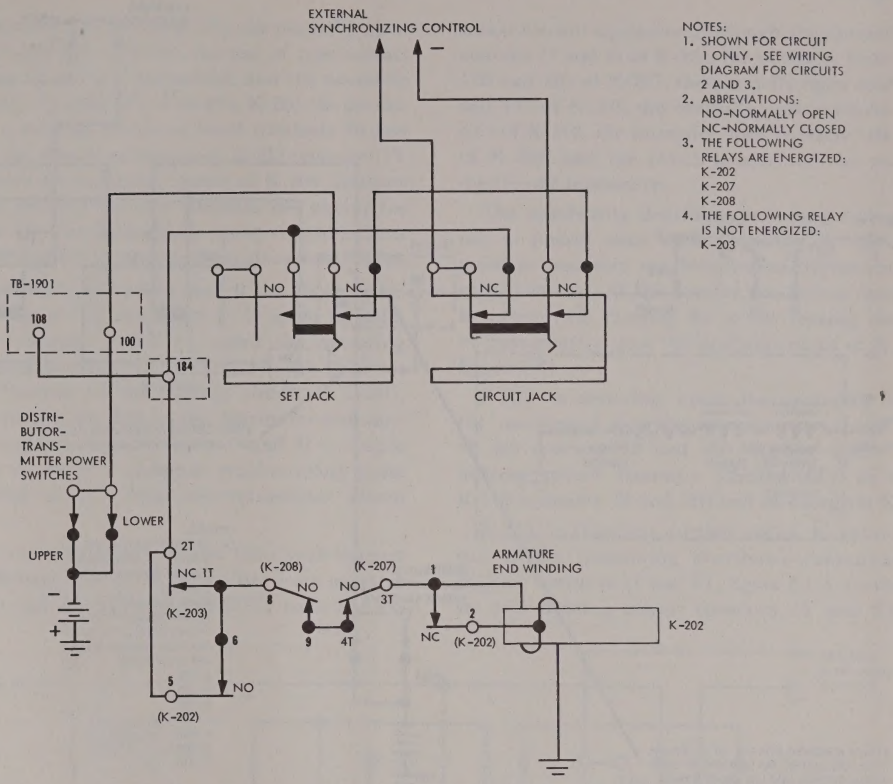

Figure 2—11. Operating Circuits of K-202 during Transmission from Lower Distributor-Transmitter

SAGE switch, the normally open contacts (5B and 6B) of K-210, the normally closed contacts (1B and 2B) of K-203, the unlatched position of upper message distributor-transmitter release bar contacts (operating circuit closed), the end of tape contacts of the upper message distributor-transmitter, the coil of K-204, and the normally closed contacts (2B and 1B) of K-205.

K-204, in operating, opens the operating circuit of K-205 (K-204 contacts 1B and 2B, figure 2-15), partially completes the upper message distributor-transmitter clutch magnet circuit (K-204 contacts 5B and 6B, figure 2-13), prepares the operating circuit of K-203, completes the operating circuit of K-207 (K-204 contacts 3B and 4B, and 5T and 6T, figure 2-10), and places a holding circuit on itself (K-204 contacts 5T and 6T). The operating circuit of K-207 can be traced from positive battery (ground), through the normally open contacts (5T and 6T) of K-204, the end of tape contacts of the upper message distributor-transmitter, the normally open contacts (4B and 3B) of K-204, and the coil of K-207. K-207, in operating, opens the operating circuit of K-210 (K-207 contacts 1T and 2T, figure 2-9), (K-210 does not de-energize because of the holding circuit on itself), prepares the circuit of K-202 (K-207 contacts 3T and 4T, figure 2-11), energizes a channel BUSY lamp (K-207 contacts 5T and 6T), removes the time stamp locking circuit, and prepares the numbering distributor-transmitter clutch magnet operating circuit (K-207 contacts 3B and 4B, figure 2-12).

Up to this point the circuit through which the external synchronizing pulse is to operate the numbering distributor-transmitter clutch magnet is incomplete. Since it is important that the clutch magnet circuit is complete on arrival of a pulse, a gating relay (K-202) is used to "cock" the clutch magnet circuit.

Transmission does not begin until two external synchronizing pulses are received following the above sequence of relay operations. With the first pulse, K-202 operates from negative voltage (see figure 2-11) through the SET and CIRCUIT jacks and external control equipment, through the normally closed contacts (1T and 2T) of K-203, the normally open contacts (8 and 9) of K-208, the normally open contacts (4T and 3T) of K-207, and the armature end winding of K-202. K-202,

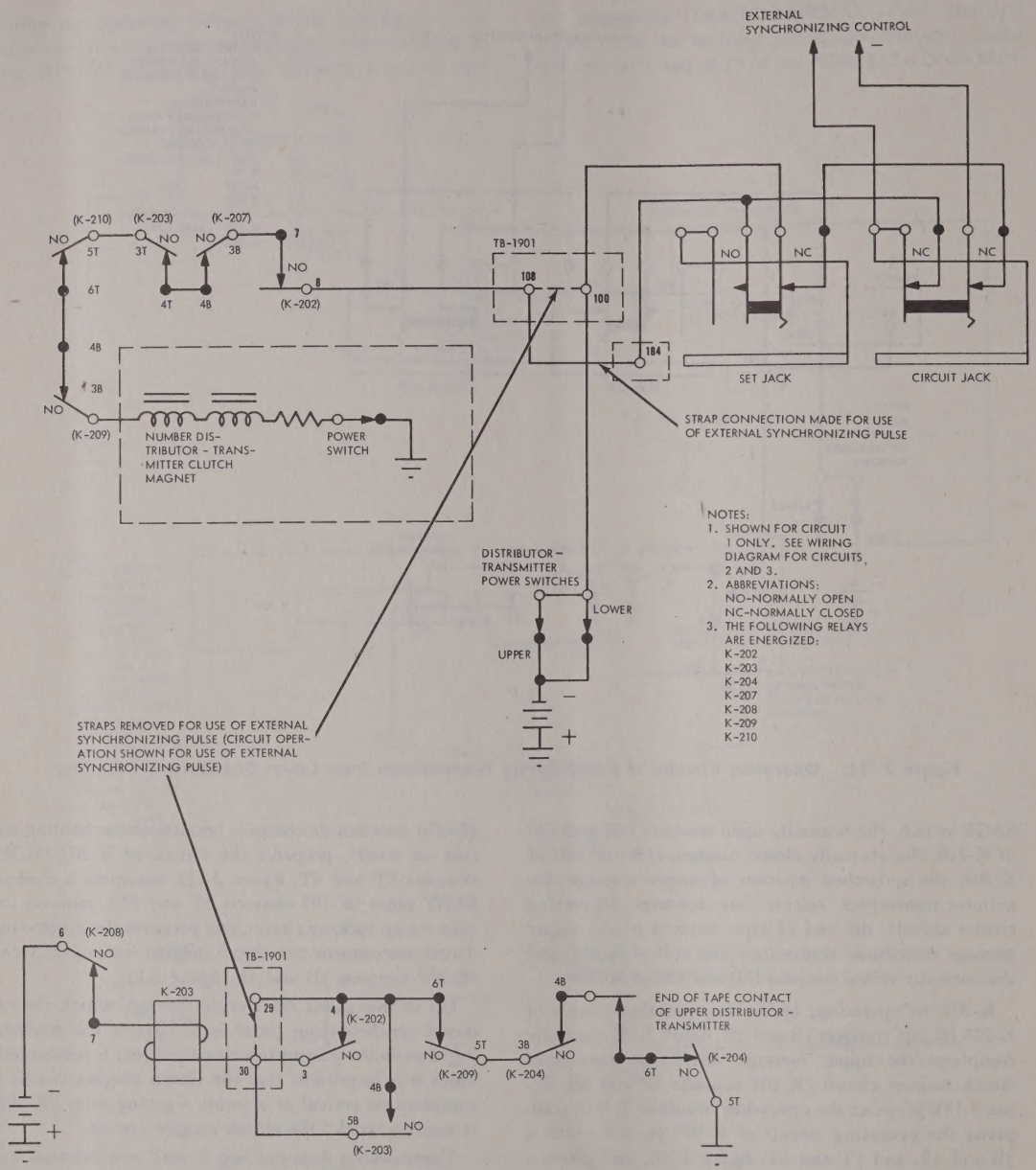

Figure 2–12. Operating Circuits of K-203 and the Numbering Distributor-Transmitter Clutch Magnet during Transmission from Lower Message Distributor-Transmitter

in operating, places a holding circuit on itself (contacts 5 and 6), opens the circuit through which the external pulse would operate the distributor-transmitter clutch magnets (contacts 7 and 8), and completes the operating circuit of K-203 (contacts 3 and 4). K-203 now operates (see figure 2-12) through the normally open contacts (6 and 7) of K-208, the coil of K-203, the normally open contacts (3 and 4) of K-202, the normally

open contacts (6T and 5T) of K-209, the normally open contacts (3B and 4B) of K-204, the end of tape contact of the upper distributor-transmitter, and the normally open contacts (6T and 5T) of K-204. K-203, in operating, places a holding circuit on itself (contacts 3B and 4B), opens the operating circuit of K-202 (contacts 1T and 2T), opens the operating circuit of K-204 (contacts 1B and 2B, figure 2-10), and prepares the circuit for the numbering distributor-transmitter clutch magnet (contacts 3T and 4T) to operate from an external pulse.

K-202 is de-energized at the end of the above pulse. Upon restoring, K-202 (see figure 2-11) opens its holding circuit (contacts 5 and 6), opens the operating circuit of K-203 (contacts 3 and 4) (K-203 does not de-energize because of the holding circuit on itself), and completes the last link in the distributor-transmitter clutch magnet circuit (contacts 7 and 8) in ample time for reception of a complete synchronizing pulse for operation of the distributor-transmitter clutch magnet.

The next external pulse operates the clutch magnet of the numbering distributor-transmitter from negative voltage, through the SET and CIRCUIT jacks and external control equipment, through the normally closed contacts (7 and 8) of K-202, the normally open contacts (3B and 4B) of K-207, the normally open contacts (4T and 3T) of K-203, the normally open contacts (5T and 6T) of K-210, the normally open contacts (4B and 3B) of K-209, and the clutch magnet of the numbering distributor-transmitter.

The numbering distributor-transmitter clutch magnet is pulsed once each character by the external pulse to maintain synchronization. Upon completion of transmission of the number, the letters combination is transmitted, causing the letters sensing mechanism to momentarily open the holding circuit of K-209 (see figure 2-8).

K-209, in restoring, opens the operating circuit of the numbering distributor-transmitter clutch magnet (K-209 contacts 3B and 4B), further opens its own holding circuit (contacts 3T and 4T), de-energizes K-210 (contacts 5B and 6B) and de-energizes K-203.

K-210, in restoring, further opens the operating circuit of the numbering distributor-transmitter clutch magnet (contacts 5T and 6T, figure 2-11), further opens its own holding circuit (contacts 7T and 8T, figure

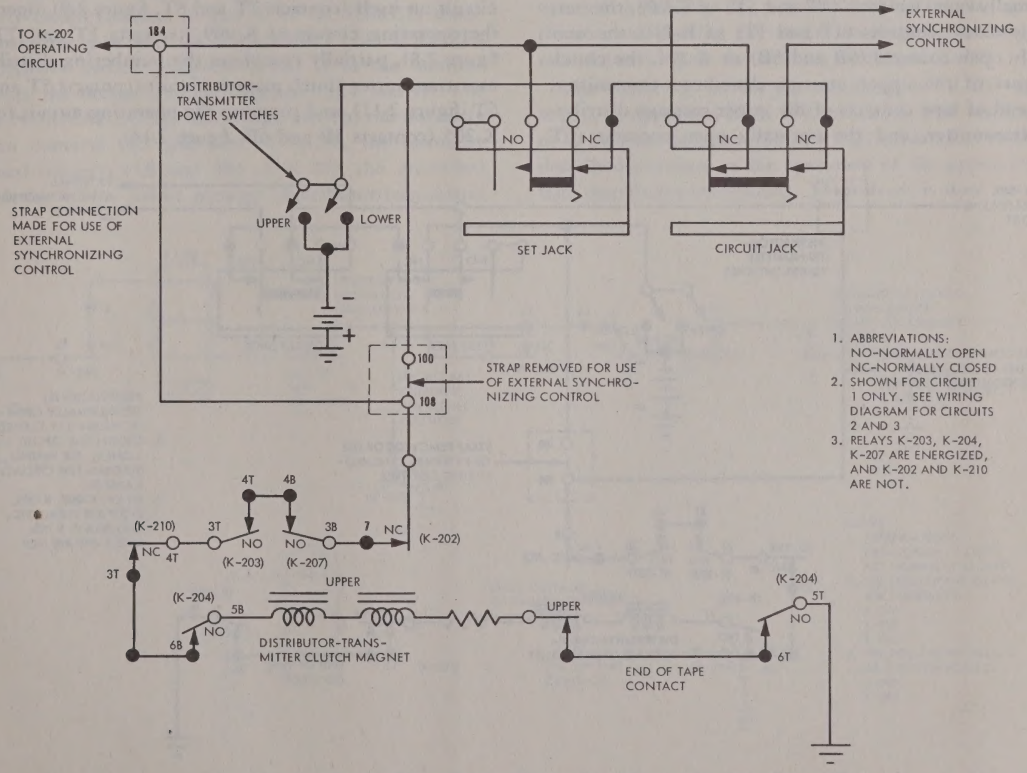

Figure 2—13. Upper Distributor-Transmitter Clutch Magnet Circuits

2-9), prepares the operating circuit of the distributor-transmitter clutch magnets (contacts 3T and 4T, figure 2-13), operates K-209, and opens the operating circuit of K-204 (contacts 5B and 6B, figure 2-10). (K-204 does not de-energize because of the holding circuit on itself.)

K-209, in operating, places a holding circuit on itself (contacts 3T and 4T, figure 2-8), and prepares the operating circuit of K-203 (contacts 5T and 6T, figure 2-11). K-210 does not operate at this time, since K-207 had been held operated.

K-203, in restoring, opens its own holding circuit (contacts 3B and 4B), opens the numbering distributor-transmitter clutch magnet circuit (contacts 3T and 4T), and prepares the operating circuit of K-202 (contacts 1T and 2T, figure 2-12).

Two pulses are now required before transmission is resumed. The first pulse operates K-202, which in turn operates K-203; the second pulse operates the upper message distributor-transmitter clutch magnet (see figure 2-13) from negative voltage through the SET and CIRCUIT jacks and external control equipment, through the normally closed contacts (8 and 7) of K-202, the normally open contacts (3B and 4B) of K-207, the normally open contacts (4T and 3T) of K-203, the normally closed contacts (4T and 3T) of K-210, the normally open contacts (6B and 5B) or K-204, the clutch magnet of the upper message distributor-transmitter, the end of tape contacts of the upper message distributor-transmitter, and the normally open contacts (6T and 5T) of K-204. Once each character, the clutch magnet is pulsed by the external pulse to maintain synchronization of transmission.

At the end of transmission, the end of tape mechanism of the upper message distributor-transmitter causes a set of contacts to open the holding circuits of K-203 and K-204 and the operating circuit of K-207. Relay K-207, in restoring, removes the external pulse from the clutch magnet circuit (contacts 3B and 4B, figure 2-12), completes the operating circuit of K-210 (contacts 1T and 2T, figure 2-9), de-energizes the channel BUSY lamp (contacts 5T and 6T, figure 2-10), opens the operating circuit of the armature end winding of K-202 (contacts 3T and 4T, figure 2-11), and applies the locking circuit to the time stamp in the monitor group. K-203, in restoring, opens its own holding circuit (contacts 3B and 4B), prepares the operating circuit of K-202 (contacts 1T and 2T), prepares the operating circuit of K-205 (contacts 1B and 2B, figure 2-15), and further opens the distributor-transmitter clutch magnet circuit (contacts 3T and 4T, figure 2-14).

K-210, in operating, further opens the operating circuit of the message distributor-transmitter clutch magnets (contacts 3T and 4T, figure 2-13), places a holding circuit on itself (contacts 7T and 8T, figure 2-9), opens the operating circuit of K-209 (contacts 1T and 2T, figure 2-8), partially completes the numbering distributor-transmitter clutch magnet circuit (contacts 5T and 6T, figure 2-11), and prepares the operating circuit for K-205 (contacts 5B and 6B, figure 2-14).

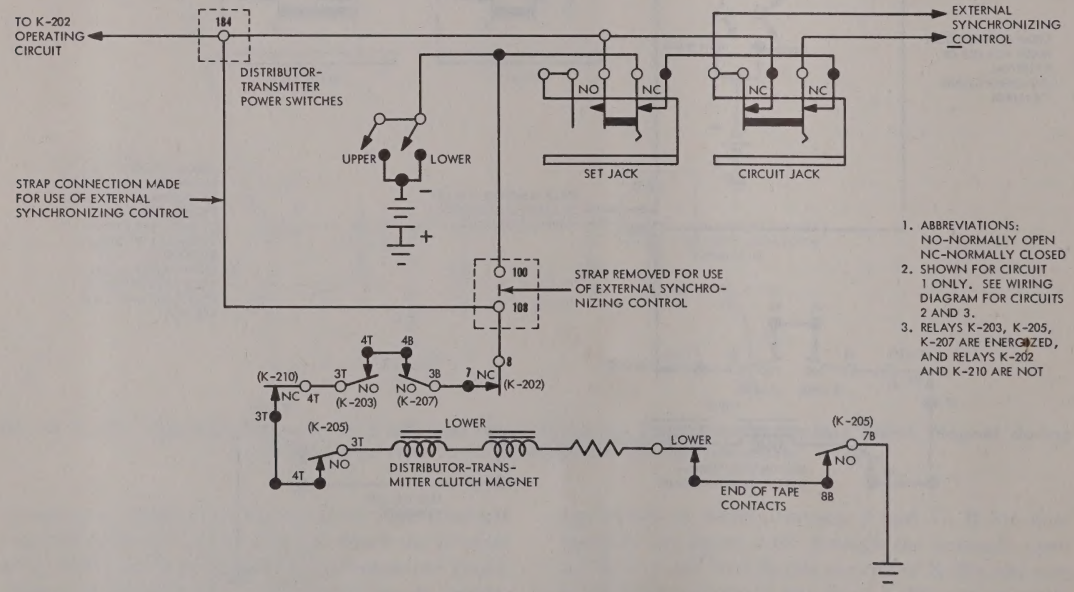

Figure 2—14. Lower Distributor-Transmitter Clutch Magnet Circuits

K-204 has a slow release time of approximately 100 milliseconds to insure completion of the message transmission before circuit transition. In restoring, K-204 further opens the operating circuit of the upper message distributor-transmitter clutch magnet (contacts 5B and 6B, and 5T and 6T, figure 2-13), further opens the operating circuits of K-203 (contacts 3B and 4B, figure 2-11) and K-207 (contacts 3B and 4B, figure 2-10), further opens its own holding circuit (contacts 5T and 6T), and completes the operating circuit of K-205 (contacts 1B and 2B, figure 2-15).

The restoring of K-204 completes the sequence of operation covering the transmission of a number followed by the transmission of a message from the upper message distributor-transmitter.

The following analysis of the transmission of a message from the lower message distributor-transmitter will refer to the above analysis when an identical sequence is encountered or when similar operating circuits are involved.

Since the release bar of the lower message transmitter has been assumed operated, K-205 will operate with the restoring of K-204. The operating circuit of K-205 (see figure 2-15) can now be traced through the normally closed contacts (8 and 9) of the RERUN transtransmitter jack and the TRANSMITTER LOCKED-NORMAL switch (contacts 6 and 7) in the monitor group, the normally closed contacts (3LT and 4LT) of the NORMAL-LONG MESSAGE switch, the normally open contacts (5B and 6B) of K-210, the normally closed contacts (1B and 2B) of K-203, the unlatched position of the lower message distributor-transmitter release bar contacts, the end of tape contacts of the lower message distributor-transmitter, the coil of K-205, and the normally closed contacts (1B and 2B) of K-204. K-205, in operating, partially completes the operating circuit of the lower message distributor-transmitter clutch magnet (contacts 3T and 4T, figure 2-14), prepares the operating circuit of K-203 (contacts 1T and 2T), completes the operating circuit of K-207 (contacts 5T and 6T, figure 2-15), further opens the operating circuit of K-204 (contacts 1B and 2B, figure 2-10), and completes its own holding circuit (contacts 7B and 8B).

Three external pulses are received during the transition from the upper distributor-transmitter to the lower distributor-transmitter before the circuit to the numbering distributor-transmitter clutch magnet is complete. This may be reduced to two, depending upon the restoring time of K-204; the 100 millisecond value is nominal.

The operation of K-202, the operation of K-203, the restoring of K-202, and the operation of the numbering distributor-transmitter is identical to that described previous to the operation of the upper message distributor-transmitter. Upon completion of the transmission of numbers, the letters combination is again transmitted, causing the letters sensing mechanism to momentarily open the holding circuit of K-209.

The restoring of K-209, restoring of K-203 and K-210, re-operation of K-209, operation and restoring of K-202, and re-operation of K-203 is identical to that described previous to the operation of the upper message distributor-transmitter. The circuit is now set up

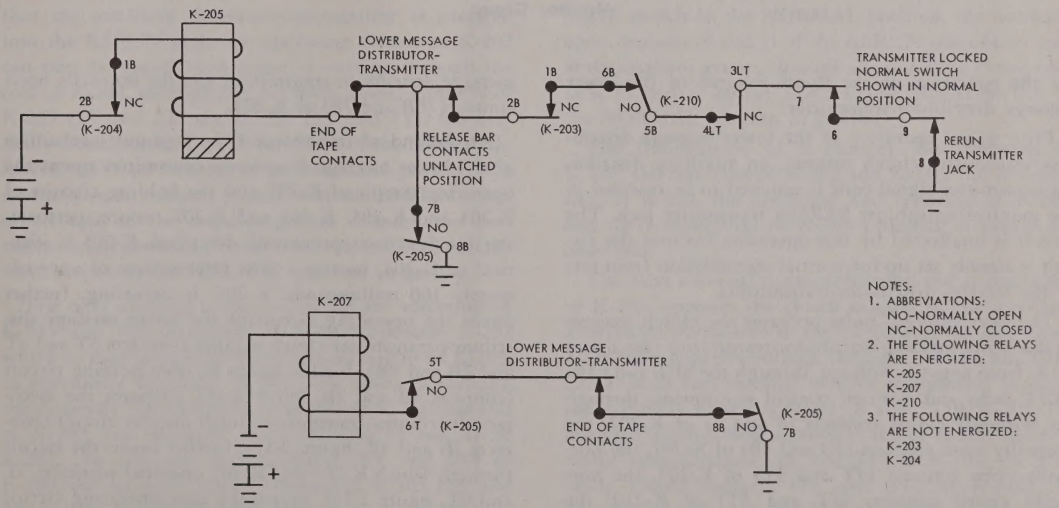

Figure 2—15. Operating Circuits of K-205 and K-207 when Lower Message Distributor-Transmitter is Operated

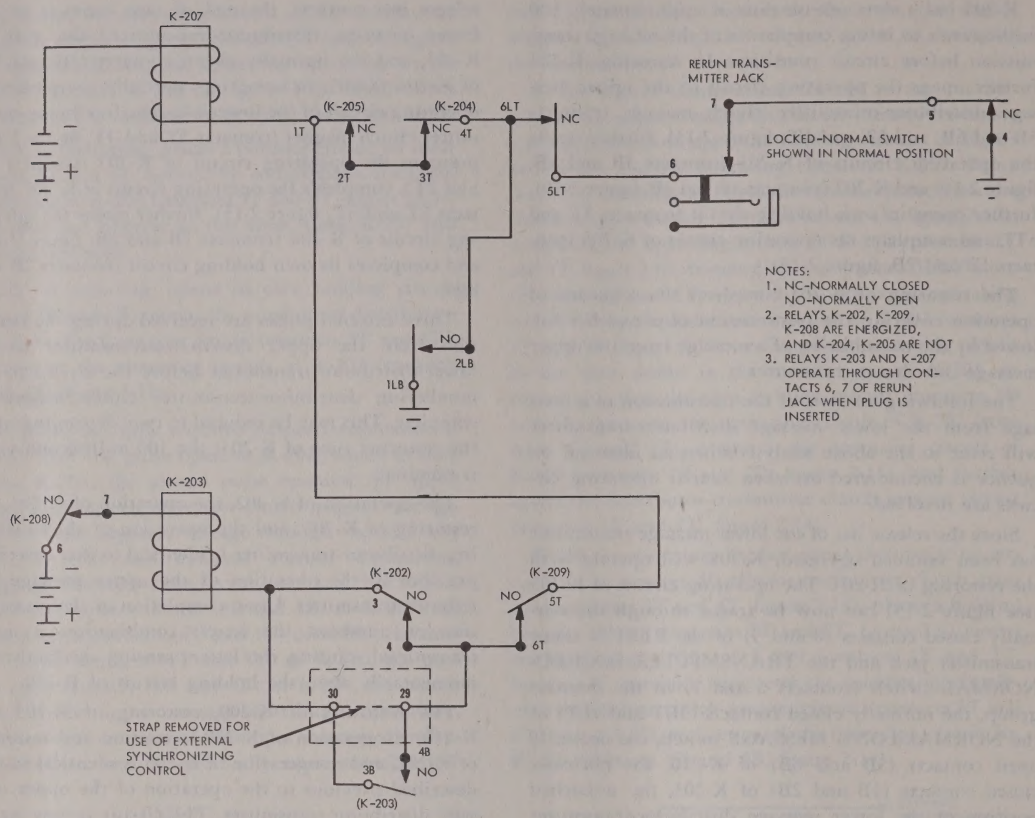

Figure 2–16. Operating Circuits of K-207 and K-203 prior to Transmission from Rerun Transmitter at Monitor Group

for the operation of the clutch magnet of the lower message distributor-transmitter.

Prior to the operation of the lower message distributor-transmitter clutch magnet, an auxiliary distributor-transmitter signal cord is assumed to be inserted in the monitoring cabinet RERUN transmitter jack. The circuit is unaffected by this operation because the circuit is already set up for normal transmission from one of the tandem distributor-transmitters.

The next external pulse operates the clutch magnet of the lower message distributor-transmitter (see figure 2-14) from negative voltage, through the SET and CIRCUIT jacks and external control equipment, through the normally closed contacts (8 and 7) of K-202, the normally open contacts (3B and 4B) of K-207, the normally open contacts (4T and 3T) of K-203, the normally closed contacts (4T and 3T) of K-210, the normally open contacts (4T and 3T) of K-205, the clutch magnet, the end of tape contacts of the lower message distributor-transmitter, and the normally open contacts (8B and 7B) of K-205.

At the end of transmission the tape-out mechanism of the lower message distributor-transmitter opens the operating circuit of K-207 and the holding circuits of K-203 and K-205. K-203 and K-207 restore, performing the functions previously described. K-205 is identical to K-204, having a slow release time of approximately 100 milliseconds. K-205, in restoring, further opens the operating circuit of the lower message distributor-transmitter clutch magnet (contacts 3T and 4T and 7B and 8B), further opens its own holding circuit (contacts 8B and 7B, figure 2-15), prepares the auxiliary distributor-transmitter clutch magnet circuit (contacts 3B and 4B, figure 2-17), further opens the circuit through which K-203 and K-207 operated (contacts 5T and 6T, figure 2-15), prepares a new operating circuit for K-203 (contacts 1T and 2T, figure 2-16) and completes a new operating circuit for K-207. Assuming

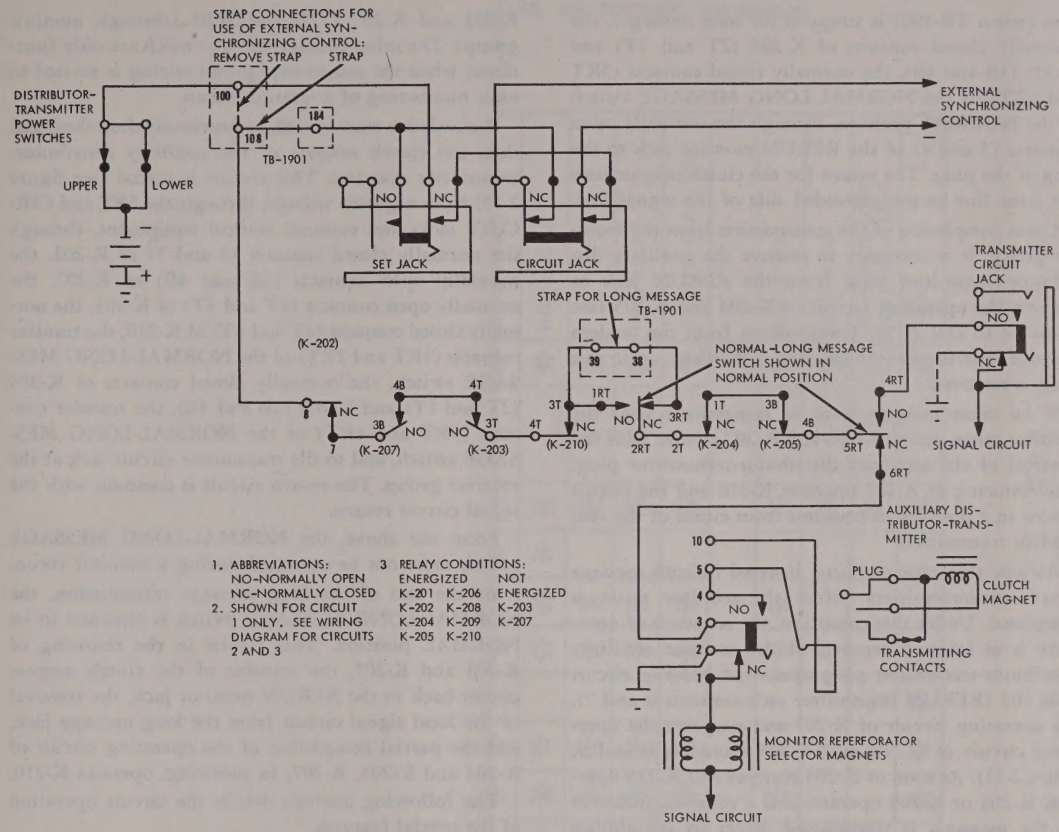

Figure 2–17. Auxiliary Distributor-Transmitter Operating Circuit

that the auxiliary distributor-transmitter is plugged into the RERUN jack, the operating circuit of K-207 can now be traced from negative voltage through the coil of K-207, through the normally closed contacts of K-205 (1T and 2T) and K-204 (3T and 4T), the normally closed contacts (6LT and 5LT) of the NORMAL-LONG MESSAGE switch in the NORMAL position, the normally open contacts (6 and 7) of the RERUN transmitter jack at the monitor group, through the normally closed contacts (5 and 4) of the LOCKED-NORMAL switch in the NORMAL position to ground.

The next external pulse, following the restoring of K-205 and the operation of K-207, operates K-202 which in turn completes the operating circuit of K-203, as previously described. K-203 now operates through the normally open contacts (6 and 7) of K-208, the coil of K-203, the normally open contacts (3 and 4) of K-202, the normally open contacts (6T and 5T) of K-209, the normally closed contacts of K-205 (1T and 2T) and K-204 (3T and 4T), the normally closed contacts (6LT and 5LT) of the NORMAL-LONG MESSAGE switch in the NORMAL position, the normally open contacts (6 and 7) of the RERUN transmitter jack at the monitor group, through the normally closed contacts (5 and 4) of the LOCKED-NORMAL switch in the NORMAL position to ground.

The transmission of a number, the restoring of K-209, the restoring of K-203 and K-210, the re-operation of K-209, the operation and restoring of K-202, and the re-operation of K-203 proceeds as previously described.

The next external pulse, following the re-operation of K-203, operates the clutch magnet of the auxiliary distributor-transmitter at the monitor group (see figure 2-17) from negative voltage, through the SET and CIRCUIT jacks and external control equipment, through the normally closed contacts (8 and 7) of K-202, the normally open contacts (3B and 4B) of K-207, the normally open contacts (4T and 3T) of K-203, the normally closed contacts (4T and 3T) of K-210, the normally closed contacts (3RT and 2RT) of the NORMAL-LONG MESSAGE switch in the NORMAL posi-

tion (when TB-1901 is strapped for long message), the normally closed contacts of K-204 (2T and 1T) and K-205 (3B and 4B), the normally closed contacts (5RT and 6RT) of the NORMAL-LONG MESSAGE switch in the NORMAL position, through the normally open contacts (3 and 4) of the RERUN monitor jack to the ring of the plug. The return for the clutch magnet uses the same line as the grounded side of the signal line.

Upon completion of the transmission from the monitor group, it is necessary to remove the auxiliary distributor-transmitter plug from the RERUN jack to prepare the operating circuit of K-204 and K-205 (see figures 2-10 and 2-15). Transmission from the tandem message distributor-transmitters is blocked until this plug is removed.

If no other message is to be transmitted after the monitor rerun, relays K-203 and K-207 restore with the removal of the auxiliary distributor-transmitter plug. The restoring of K-207 operates K-210 and the circuit is now in a position to transmit from either of the two tandem transmitters.

Assume that tape has been inserted in both message distributor-transmitters before the monitor rerun is completed. Under this condition, the sequence of operation is as follows: removal of the monitor auxiliary distributor-transmitter plug opens the holding circuit of K-203 (RERUN transmitter jack contacts 6 and 7), the operating circuit of K-207 and prepares the operating circuit of K-204 and K-205 (contacts 8 and 9, figure 2-15). As soon as K-203 restores and K-210 operates, K-204 or K-205 operates and a number, followed by the message, is transmitted. Refer to the timing diagram (table 2-2) for the sequence of operations.

The transmission of a long message from the receiver group is accomplished as follows: the auxiliary distributor-transmitter signal cord is inserted in the long message TRANSMITTER CIRCUIT jack in the receiver group, then the NORMAL-LONG MESSAGE switch in the selected transmitter cabinet is operated (placed in the LONG MESSAGE position). Do not place the NORMAL-LONG MESSAGE switch in the LONG MESSAGE position during a monitor rerun. This switch performs the following functions: it completes the operating circuit of K-207; prepares the operating circuit of K-203 through the normally open contacts (1LB and 2LB) of the long message switch, and the normally closed contacts of K-204 (4T and 3T) and K-205 (2T and 1T) (see figure 2-16); inserts the signal circuits of the long message transmitter jack into the local signal circuit (contacts 3RB and 1RB); opens the operating circuit of K-205 and K-204 (3LT and 4LT, figures 2-10 and 2-15); transfers the clutch magnet operating circuit from the RERUN monitor jack to the long message jack (contacts 4RT and 5RT, figure 2-17); and opens an alternate operating circuit for K-203 and K-207 (1LB and 2LB) (through monitor group). The other contacts of this switch are only functional when the transmitter group wiring is revised to omit numbering of a monitor rerun.

A number is transmitted, as previously described, and then the clutch magnet of the auxiliary distributor-transmitter operates. This circuit is traced (see figure 2-17) from negative voltage, through the SET and CIRCUIT jacks and external control equipment, through the normally closed contacts (8 and 7) of K-202, the normally open contacts (3B and 4B) of K-207, the normally open contacts (4T and 3T) of K-203, the normally closed contacts (4T and 3T) of K-210, the transfer contacts (1RT and 2RT) of the NORMAL-LONG MESSAGE switch, the normally closed contacts of K-204 (2T and 1T) and K-205 (3B and 4B), the transfer contacts (5RT and 4RT) of the NORMAL-LONG MESSAGE switch, and to the transmitter circuit jack at the receiver group. The return circuit is common with the signal circuit return.

From the above, the NORMAL-LONG MESSAGE switch must not be operated during a monitor rerun.

At the end of the long message transmission, the NORMAL-LONG MESSAGE switch is returned to its NORMAL position. This results in the restoring of K-203 and K-207, the transfer of the clutch magnet circuit back to the RERUN monitor jack, the removal of the local signal circuit from the long message jack, and the partial completion of the operating circuit of K-204 and K-205. K-207, in restoring, operates K-210.

The following analysis details the circuit operation of the special features.

It is possible to stop transmission from either of the two tandem distributor-transmitters before the message is complete without disturbing the circuit. This is accomplished by returning the release bar of the message distributor-transmitter in operation to the latched position. This results in the energization of the heel end winding of K-202 (see figure 2-18) through the normally open contacts of K-204 (6T and 5T) or K-205 (8B and 7B), and the latched release bar contacts of the distributor-transmitter. K-202, in operating, opens the circuit through which the external pulse is received. This prevents any further transmission until K-202 restores. When the release bar of the message distributor-transmitter is returned to the unlatched position, the heel end winding of K-202 is de-energized, and the circuit recocks, insuring synchronization between the external pulse and the first transmitted character.

The circuit may be operated with or without an external pulse. The change from steady current to an external pulse is made by a change in the terminal board wiring of the transmitter group (see figures 2-11, 2-12, 2-13, 2-14, 2-16 and 2-17). During steady operation, the armature end winding of K-202 is out of the

| | | |

tion (when TB-1901 is strapped for long message), the normally closed contacts of K-204 (2T and 1T) and K-205 (3B and 4B), the normally closed contacts (5RT and 6RT) of the NORMAL-LONG MESSAGE switch in the NORMAL position, through the normally open contacts (3 and 4) of the RERUN monitor jack to the ring of the plug. The return for the clutch magnet uses the same line as the grounded side of the signal line.

Upon completion of the transmission from the monitor group, it is necessary to remove the auxiliary distributor-transmitter plug from the RERUN jack to prepare the operating circuit of K-204 and K-205 (see figures 2-10 and 2-15). Transmission from the tandem message distributor-transmitters is blocked until this plug is removed.

If no other message is to be transmitted after the monitor rerun, relays K-203 and K-207 restore with the removal of the auxiliary distributor-transmitter plug. The restoring of K-207 operates K-210 and the circuit is now in a position to transmit from either of the two tandem transmitters.

Assume that tape has been inserted in both message distributor-transmitters before the monitor rerun is completed. Under this condition, the sequence of operation is as follows: removal of the monitor auxiliary distributor-transmitter plug opens the holding circuit of K-203 (RERUN transmitter jack contacts 6 and 7), the operating circuit of K-207 and prepares the operating circuit of K-204 and K-205 (contacts 8 and 9, figure 2-15). As soon as K-203 restores and K-210 operates, K-204 or K-205 operates and a number, followed by the message, is transmitted. Refer to the timing diagram (table 2-2) for the sequence of operations.

The transmission of a long message from the receiver group is accomplished as follows: the auxiliary distributor-transmitter signal cord is inserted in the long message TRANSMITTER CIRCUIT jack in the receiver group, then the NORMAL-LONG MESSAGE switch in the selected transmitter cabinet is operated (placed in the LONG MESSAGE position). Do not place the NORMAL-LONG MESSAGE switch in the LONG MESSAGE position during a monitor rerun. This switch performs the following functions: it completes the operating circuit of K-207; prepares the operating circuit of K-203 through the normally open contacts (1LB and 2LB) of the long message switch, and the normally closed contacts of K-204 (4T and 3T) and K-205 (2T and 1T) (see figure 2-16); inserts the signal circuits of the long message transmitter jack into the local signal circuit (contacts 3RB and 1RB); opens the operating circuit of K-205 and K-204 (3LT and 4LT, figures 2-10 and 2-15); transfers the clutch magnet operating circuit from the RERUN monitor jack to the long message jack (contacts 4RT and 5RT, figure 2-17); and opens an alternate operating circuit for K-203 and K-207 (1LB and 2LB) (through monitor group). The other contacts of this switch are only functional when the transmitter group wiring is revised to omit numbering of a monitor rerun.

A number is transmitted, as previously described, and then the clutch magnet of the auxiliary distributor-transmitter operates. This circuit is traced (see figure 2-17) from negative voltage, through the SET and CIRCUIT jacks and external control equipment, through the normally closed contacts (8 and 7) of K-202, the normally open contacts (3B and 4B) of K-207, the normally open contacts (4T and 3T) of K-203, the normally closed contacts (4T and 3T) of K-210, the transfer contacts (1RT and 2RT) of the NORMAL-LONG MESSAGE switch, the normally closed contacts of K-204 (2T and 1T) and K-205 (3B and 4B), the transfer contacts (5RT and 4RT) of the NORMAL-LONG MESSAGE switch, and to the transmitter circuit jack at the receiver group. The return circuit is common with the signal circuit return.

From the above, the NORMAL-LONG MESSAGE switch must not be operated during a monitor rerun.

At the end of the long message transmission, the NORMAL-LONG MESSAGE switch is returned to its NORMAL position. This results in the restoring of K-203 and K-207, the transfer of the clutch magnet circuit back to the RERUN monitor jack, the removal of the local signal circuit from the long message jack, and the partial completion of the operating circuit of K-204 and K-205. K-207, in restoring, operates K-210.

The following analysis details the circuit operation of the special features.

It is possible to stop transmission from either of the two tandem distributor-transmitters before the message is complete without disturbing the circuit. This is accomplished by returning the release bar of the message distributor-transmitter in operation to the latched position. This results in the energization of the heel end winding of K-202 (see figure 2-18) through the normally open contacts of K-204 (6T and 5T) or K-205 (8B and 7B), and the latched release bar contacts of the distributor-transmitter. K-202, in operating, opens the circuit through which the external pulse is received. This prevents any further transmission until K-202 restores. When the release bar of the message distributor-transmitter is returned to the unlatched position, the heel end winding of K-202 is de-energized, and the circuit recocks, insuring synchronization between the external pulse and the first transmitted character.

The circuit may be operated with or without an external pulse. The change from steady current to an external pulse is made by a change in the terminal board wiring of the transmitter group (see figures 2-11, 2-12, 2-13, 2-14, 2-16 and 2-17). During steady operation, the armature end winding of K-202 is out of the

TABLE 2-2. TRANSMITTER GROUP TIMING DIAGRAM

	POWER APPLIED			RESET DEPRESSED	NORMAL IDLE CONDITION	RELEASE BAR LATCHED	RELEASE BAR UNLATCHED	READY		SYNC PULSE 1	END OF PULSE		SYNC PULSE 2	1ST. MSG. NUMB. SENT		HOLD K-210		SYNC. PULSE 1	END OF PULSE		SYNC PULSE 2	1ST. MSG. NUMB. SENT		END OF TAPE	HOLD K-204	TRANSFER TO LOWER MSG. DIST.-TRANS.	READY
MAIN POWER	*	*	*	*	*	*	*	*	*	*	*	*	*	*		*	*	*	*	*	*	*	*		*	*	*	*
RESET BUTTON				*																								
RELEASE BARS						*																						
RELAY K-201		*	*	*	*	*	*	*	*	*	*	*	*	*		*	*	*	*	*	*	*	*		*	*	*	*
RELAY K-202										*	*								*	*								
RELAY K-203											*	*	*	*		*				*	*	*	*		*			
RELAY K-204							*	*	*	*	*	*	*	*		*	*	*	*	*	*	*	*		*	★		
RELAY K-205																											*	*
RELAY K-206			*	*	*	*	*	*	*	*	*	*	*	*		*	*	*	*	*	*	*	*		*	*	*	*
RELAY K-207								*	*	*	*	*	*	*		*	*	*	*	*	*	*	*		*			*
RELAY K-208				*	*	*	*	*	*	*	*	*	*	*		*	*	*	*	*	*	*	*		*	*	*	*
RELAY K-209		*	*	*	*	*	*	*	*	*	*	*	*	*		*		*	*	*	*	*	*		*	*	*	*
RELAY K-210			*	*	*	*	*	*	*	*	*	*	*	*		*	★									*	*	*
OPEN LINE LAMP	*	*	*																									
LINE BUSY LAMP								*	*	*	*	*	*	*		*	*	*	*	*	*	*	*		*			*
NUMB. DIST.-TRANS. CLUTCH MAGNET													*	*		*												
UPPER MSC. DIST.-TRANS. CLUTCH MAG.																						*	*					
END OF TAPE — UPPER DIST.-TRANS.	OPEN					CLOSED																			OPEN			
END OF TAPE — LOWER DIST.-TRANS.	CLOSED																											
LTRS. SENSING	CLOSED															OPEN		CLOSED										
EXT. SYNC PULSE										*	*		*	*					*	*		*	*					

TIME →

★ DENOTES SLOW RELEASE HOLDING OF DE-ENERGIZED RELAY.

* DENOTES ENERGIZED UNIT OR OPERATED CONDITION.

TIME IS NOT TO SCALE AND ONLY INDICATES SEQUENCE.

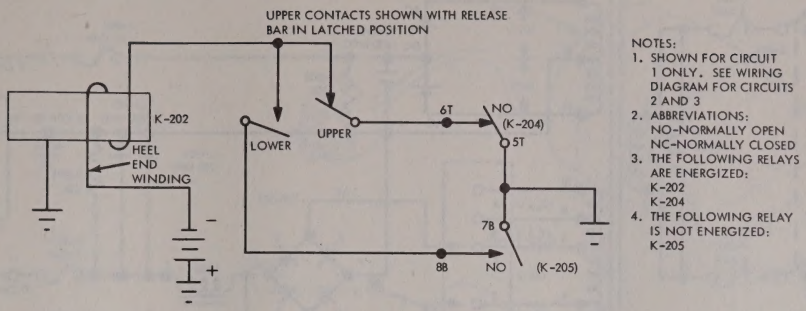

Figure 2–18. Operating Circuit of Heel End Winding of K-202 with Release Bar in Latched Position

circuit. In steady operation, the circuit analysis is the same as previously described with the following exceptions: (1) when K-204 or K-205 operate, during normal transmission, or when a monitor rerun or long message is transmitted, K-203 operates immediately instead of being cocked by K-202; (2) the end of tape contact de-energizes the clutch magnet of the associated distributor-transmitter in addition to the control relays; (3) the operating circuit for the distributor-transmitter clutch magnets is a local circuit (see figure 2-11).

To delete a number from all transmitted messages, the NUMBER-DELETE switch on the front panel is used. This switch removes the numbering distributor-transmitter from the circuit by opening the operating circuit (contacts 1 and 2) of K-210. The switch also parallels contacts 5B and 6B of K-210 (switch contacts 3 and 4, figure 2-10) in series with K-204 or K-205, which allows either relay to operate. The NUMBER-DELETE switch on the control panel is only used to delete a number when transmitting from an auxiliary distributor-transmitter. This switch also seizes the line following the completion of a message from one of the tandem distributor-transmitters.

The LOCKED-NORMAL switch at the monitor group may be used as follows:

(1) To seize the line, preventing any further transmission from the tandem distributors-transmitters following the completion of a message. The operating circuit of K-204 and K-205 is opened when the LOCKED-NORMAL switch (contacts 6 and 7) is placed in the LOCKED position. Refer to figure 2-10 illustrating the operating circuit of K-204.

(2) To stop transmission from an auxiliary distributor-transmitter at the monitor group without disturbing the circuit. Transmission may be stopped by placing the LOCKED-NORMAL switch in the LOCKED POSITION. The operating circuit of K-207 (switch contacts 4 and 5, figure 2-16) and the holding circuit of K-203 are opened. K-203, in restoring, opens the distributor-transmitter clutch magnet circuit (K-203 contacts 3T and 4T, figure 2-13). K-210 does not operate at this time since the ground connection (contacts 5 and 6) through the LOCKED-NORMAL switch has been removed. Returning the switch to the NORMAL position recompletes the circuit to K-207. K-207 completes the circuit to K-202 (K-207 contacts 3T and 4T, figure 2-11), which in turn operates K-203 (K-202 contacts 3 and 4).

(3) To delete a number prior to the transmission from an auxiliary distributor-transmitter at the monitor group. The LOCKED-NORMAL switch is placed in the LOCKED position before the transmitter plug is inserted into the jack to prevent K-207 and K-203 from operating (switch contacts 5 and 4, figure 2-16). Inserting the plug removes ground from K-210 and the relay restores. The LOCKED-NORMAL switch is then placed in the NORMAL position and transmission begins. The sequence of operation is identical to that described in the above paragraph. (See figure 2-11.)

c. POWER SUPPLY PP-987/U. *(See figure 2-19.)*— Input power, 115 volts ac, is obtained through three-conductor plug P-501, one prong of which is grounded. Switch S-501 applies the input power to the primary of T-501 through fuses F-501 and F-502. Pilot light I-501 is connected across the primary and indicates circuit energization. Secondary number 1, with an output of 140 volts ac across terminals 7 and 8, is connected to the selenium rectifiers CR-501 and CR-502. These selenium rectifiers are connected in a full wave rectifier bridge circuit. Since current can travel in only one direction in a selenium rectifier, the ac is rectified into dc. The selenium rectifier decreases in efficiency as it ages, therefore adjustment is provided by the taps on the secondary of the transformer. Output terminals 2, 3, 4, and 5 provide an additional 2.5 volts each in that order, and terminals M and H provide an additional 12.5 volts each in that order. The output of the selenium rectifiers is filtered by L-501, C-501, and C-502. R-501, the bleeder resistor, is connected across the output to improve voltage regulation. The positive side of the

TABLE 2-2. TRANSMITTER GROUP TIMING DIAGRAM

	POWER APPLIED			RESET DEPRESSED	NORMAL IDLE CONDITION	RELEASE BAR LATCHED	RELEASE BAR UNLATCHED	READY		SYNC PULSE 1	END OF PULSE		SYNC PULSE 2	1ST. MSG. NUMB. SENT		HOLD K-210		SYNC. PULSE 1	END OF PULSE		SYNC PULSE 2	1ST. MSG. NUMB. SENT		END OF TAPE	HOLD K-204	TRANSFER TO LOWER MSG. DIST.-TRANS.	READY
MAIN POWER	*	*	*	*	*	*	*	*	*	*	*	*	*	*		*	*	*	*	*	*	*	*		*	*	*	*
RESET BUTTON				*																								
RELEASE BARS						*																						
RELAY K-201		*	*	*	*	*	*	*	*	*	*	*	*	*		*	*	*	*	*	*	*	*		*	*	*	*
RELAY K-202										*	*								*	*								
RELAY K-203											*	*	*	*		*				*	*	*	*		*			
RELAY K-204							*	*	*	*	*	*	*	*		*	*	*	*	*	*	*	*		*	★		
RELAY K-205																											*	*
RELAY K-206			*	*	*	*	*	*	*	*	*	*	*	*		*	*	*	*	*	*	*	*		*	*	*	*
RELAY K-207								*	*	*	*	*	*	*		*	*	*	*	*	*	*	*		*			*
RELAY K-208				*	*	*	*	*	*	*	*	*	*	*		*	*	*	*	*	*	*	*		*	*	*	*
RELAY K-209		*	*	*	*	*	*	*	*	*	*	*	*	*		*		*	*	*	*	*	*		*	*	*	*
RELAY K-210			*	*	*	*	*	*	*	*	*	*	*	*		*	★									*	*	*
OPEN LINE LAMP	*	*	*																									
LINE BUSY LAMP								*	*	*	*	*	*	*		*	*	*	*	*	*	*	*		*			*
NUMB. DIST.-TRANS. CLUTCH MAGNET													*	*		*												
UPPER MSC. DIST.-TRANS. CLUTCH MAG.																						*	*					
END OF TAPE — UPPER DIST.-TRANS.	OPEN					CLOSED																			OPEN			
END OF TAPE — LOWER DIST.-TRANS.	CLOSED																											
LTRS. SENSING	CLOSED															OPEN		CLOSED										
EXT. SYNC PULSE										*	*		*	*					*	*		*	*					

TIME →

★ DENOTES SLOW RELEASE HOLDING OF DE-ENERGIZED RELAY.

* DENOTES ENERGIZED UNIT OR OPERATED CONDITION.

TIME IS NOT TO SCALE AND ONLY INDICATES SEQUENCE.

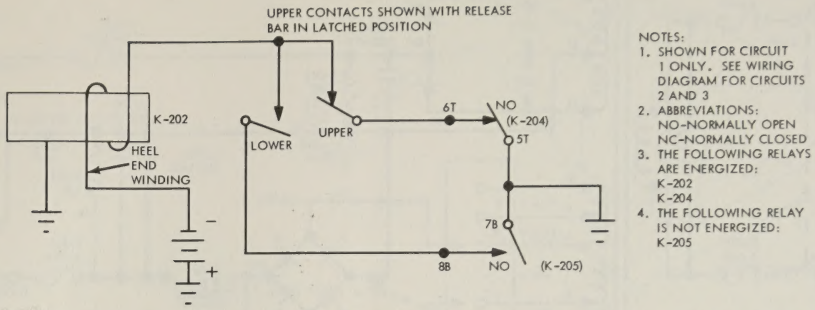

Figure 2–18. Operating Circuit of Heel End Winding of K-202 with Release Bar in Latched Position

circuit. In steady operation, the circuit analysis is the same as previously described with the following exceptions: (1) when K-204 or K-205 operate, during normal transmission, or when a monitor rerun or long message is transmitted, K-203 operates immediately instead of being cocked by K-202; (2) the end of tape contact de-energizes the clutch magnet of the associated distributor-transmitter in addition to the control relays; (3) the operating circuit for the distributor-transmitter clutch magnets is a local circuit (see figure 2-11).

To delete a number from all transmitted messages, the NUMBER-DELETE switch on the front panel is used. This switch removes the numbering distributor-transmitter from the circuit by opening the operating circuit (contacts 1 and 2) of K-210. The switch also parallels contacts 5B and 6B of K-210 (switch contacts 3 and 4, figure 2-10) in series with K-204 or K-205, which allows either relay to operate. The NUMBER-DELETE switch on the control panel is only used to delete a number when transmitting from an auxiliary distributor-transmitter. This switch also seizes the line following the completion of a message from one of the tandem distributor-transmitters.

The LOCKED-NORMAL switch at the monitor group may be used as follows:

(1) To seize the line, preventing any further transmission from the tandem distributors-transmitters following the completion of a message. The operating circuit of K-204 and K-205 is opened when the LOCKED-NORMAL switch (contacts 6 and 7) is placed in the LOCKED position. Refer to figure 2-10 illustrating the operating circuit of K-204.

(2) To stop transmission from an auxiliary distributor-transmitter at the monitor group without disturbing the circuit. Transmission may be stopped by placing the LOCKED-NORMAL switch in the LOCKED POSITION. The operating circuit of K-207 (switch contacts 4 and 5, figure 2-16) and the holding circuit of K-203 are opened. K-203, in restoring, opens the distributor-transmitter clutch magnet circuit (K-203 contacts 3T and 4T, figure 2-13). K-210 does not operate at this time since the ground connection (contacts 5 and 6) through the LOCKED-NORMAL switch has been removed. Returning the switch to the NORMAL position recompletes the circuit to K-207. K-207 completes the circuit to K-202 (K-207 contacts 3T and 4T, figure 2-11), which in turn operates K-203 (K-202 contacts 3 and 4).

(3) To delete a number prior to the transmission from an auxiliary distributor-transmitter at the monitor group. The LOCKED-NORMAL switch is placed in the LOCKED position before the transmitter plug is inserted into the jack to prevent K-207 and K-203 from operating (switch contacts 5 and 4, figure 2-16). Inserting the plug removes ground from K-210 and the relay restores. The LOCKED-NORMAL switch is then placed in the NORMAL position and transmission begins. The sequence of operation is identical to that described in the above paragraph. (See figure 2-11.)

c. POWER SUPPLY PP-987/U. *(See figure 2-19.)*— Input power, 115 volts ac, is obtained through three-conductor plug P-501, one prong of which is grounded. Switch S-501 applies the input power to the primary of T-501 through fuses F-501 and F-502. Pilot light I-501 is connected across the primary and indicates circuit energization. Secondary number 1, with an output of 140 volts ac across terminals 7 and 8, is connected to the selenium rectifiers CR-501 and CR-502. These selenium rectifiers are connected in a full wave rectifier bridge circuit. Since current can travel in only one direction in a selenium rectifier, the ac is rectified into dc. The selenium rectifier decreases in efficiency as it ages, therefore adjustment is provided by the taps on the secondary of the transformer. Output terminals 2, 3, 4, and 5 provide an additional 2.5 volts each in that order, and terminals M and H provide an additional 12.5 volts each in that order. The output of the selenium rectifiers is filtered by L-501, C-501, and C-502. R-501, the bleeder resistor, is connected across the output to improve voltage regulation. The positive side of the

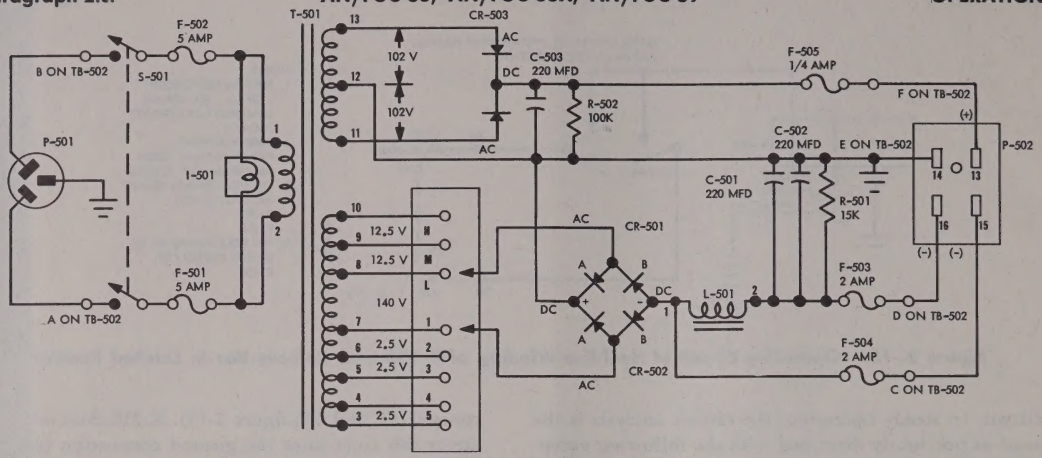

Figure 2—19. Power Supply PP-987/U, Schematic Diagram

output is connected to terminal number 14 of P-502 and is the ground side of the line. The negative side of the output is connected to terminals number 15 and 16 of P-502 through fuses F-503 and F-504 to provide 115 volts of filtered dc.

Another secondary supplies positive voltage to the teletypewriter set for polar operation. Secondary number 2, with an output of 102 volts each side of the center tap, is rectified by CR-503. The transformer center tap is grounded and the output of the rectifier is filtered by C-503. Bleeder resistor R-502 improves the voltage regulation of the power supply. The voltage output is connected to terminal number 13 on plug P-502 through fuse F-505.

3. MECHANICAL ANALYSIS.

a. REELING MACHINE RL-173/FGC. *(See figure 2-20.)*—The reeling machine is driven by the 115-volt a-c operated, 0.025-horsepower, shaded-pole motor rotating at 1550 revolutions per minute. The 7-toothed motor pinion gear on the end of the motor shaft meshes with the 40-toothed drive gear on the drive shaft. The drive gear rotates the drive shaft and the 108-toothed driven gear on the drive shaft at 271 rpm. The driven gear meshes with the 192-toothed intermediate gear which, in turn, rotates at 152 rpm. The intermediate gear, the clutch, and the reel pinion gear are all mounted on the clutch shaft. Assuming that the clutch is fully engaged, the intermediate gear drives the clutch shaft, through the clutch which drives the 10-toothed reel pinion gear at 152 rpm. The 144-toothed reel drive gear engages with the reel pinion gear when the reel is in the rear notches. This drives the reel at 10.6 rpm. The clutch system is a friction type blocked by the tight tape arm action. The tape lifts or lowers the arm which acts on the stop lever. The stop lever engages the stop cam which stops the reel pinion gear from turning the shaft. The clutch is composed of two felt friction disks, the stop cam, the friction spring, and a capstan nut. The intermediate gear drives the clutch shaft through the friction clutch. The pinion on the inner end of this shaft, in turn, drives the reel gear. When the stop cam is engaged by the stop lever, the clutch shaft does not rotate, therefore the reel does not rotate. The reel may be moved to the forward notches of the outer plate. This disengages the reel drive gear and the reel pinion gear and the tape may be unwound or wound freely.

b. GOVERNED MOTOR.—The series governed motor is used on installations where a 50- to 60-cycle or unregulated 50/60 cycle, single-phase, 115-volt a-c (± 10%) power supply is furnished. The motor is equipped with ball bearings and double shaft extensions. A margin of torque is provided for governing purposes. A governor, containing a pair of centrifugally operated contacts, is mounted on the rear shaft extension. The contacts in turn are shunted across the 250-ohm governor resistor by means of slip rings and a connecting cable. Since the governor resistor is in series with one of the motor leads, a drop in the voltage applied to the motor and a corresponding reduction in speed occurs with a momentary opening of the centrifugally operated contacts. The spring tension on the outer contact may be varied while the motor is operating. Thus the rpm required to open the contacts (governing speed) may be selected so that any tendency of the motor to speed up on account of the margin of torque provided will be instantly compensated for. A slight decrease in the motor speed on account of increased load, etc., will reduce the amount of time the contacts are opened and allow the motor to return to the desired governed speed. The 1-mfd capacitor paral-

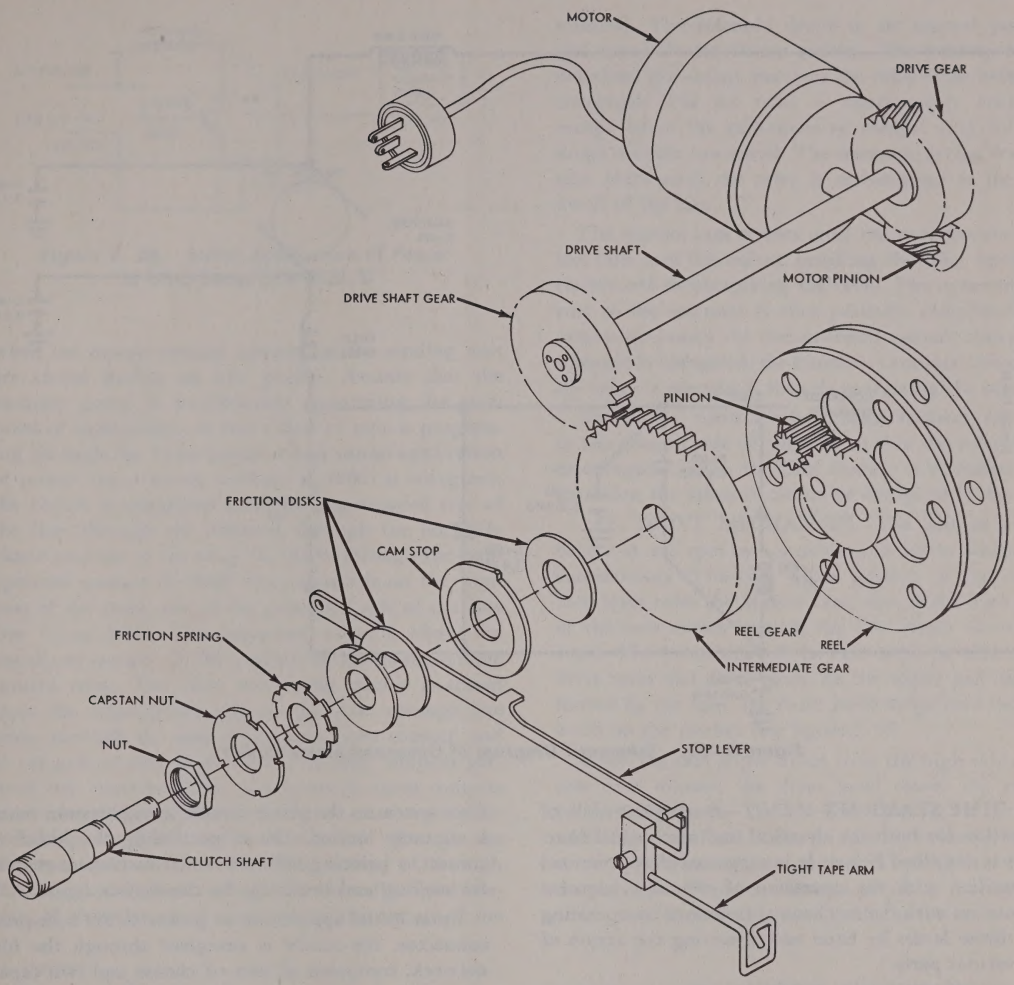

Figure 2—20. Motor Driven Tape Reeling Machine RL-173/FGC, Gear Train Diagram

lels the contacts for spark protection. The filter capacitors and the choke coil are provided for the suppression of electrical noise.

The schematic wiring diagram of the motor circuit is shown in figure 2-21. The following cycle of operation occurs with the initial application of power to the motor.

(1) The upper contact arm spring holds the contacts (E-621 and E-629) closed, thus current flows through the contacts and full voltage is impressed on the motor winding. The motor speed increases to a point where centrifugal force overcomes the spring tension on the contact points and the contacts are open.

(2) When the points open, the circuit is completed through the armature (E-608) and field windings (E-606) as before, but the 250-ohm resistor (R-600) is inserted in the circuit. This resistor cuts down the voltage applied to the motor winding, thus immediately reducing motor speed. When the speed is reduced sufficiently, the spring tension closes the contact points, and the resistor will be by-passed from the circuit. The motor speed will again increase.

(3) The governor contacts open and close at a speed determined by the degree of tension in the contact-arm spring, which is regulated by turning the speed-adjusting wheel. Increasing the spring tension will increase the motor speed.

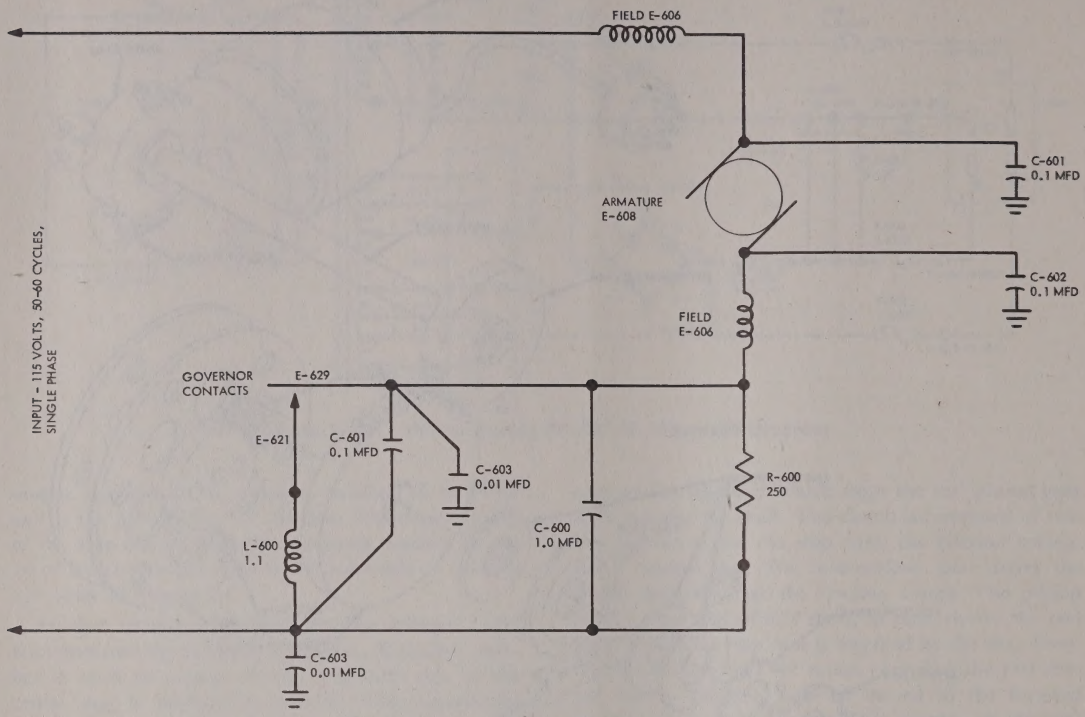

Figure 2—21. Schematic Diagram of Governed Motor Circuit

c. TIME STAMP MX-1527/U.—A complete cycle of operation for both the electrical and mechanical functions is described below. It is suggested that personnel unfamiliar with the operation of the unit acquaint themselves with the mechanical functions by operating the throw levers by hand and observing the action of the various parts.

(1) ELECTRICAL CIRCUIT.—The electrical circuit of the time stamp consists of a radio interference filter system in the power circuit, a synchronous motor, a remotely located contact paralleling the knock-out contact, a printing solenoid, and two contact switches for making and breaking the circuit (see figure 2-22).

Upon initial application of power to the four-prong connector, the motor is energized through the filter network, composed of two r-f chokes and two capacitors. The motor runs continuously throughout all normal operations, but the print solenoid is not energized

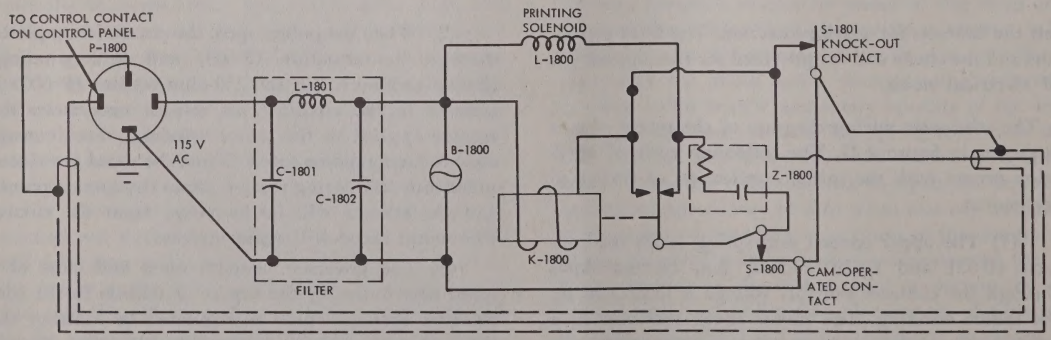

Figure 2—22. Schematic Diagram of Time Stamp MX-1527/U

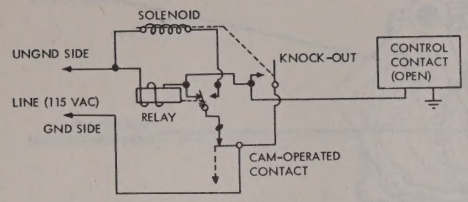

Figure 2—23. Initial Application of Power to Time Stamp MX-1527/U

when the remote control contacts on the sending unit are closed during an idle period. Assume that the monitor group is continuously monitoring, for purposes of explanation, so that a flow of tape is progressing through the Time Stamp. Upon initial application of power, the printing solenoid (L-1800) is energized; the circuit is completed from the ungrounded side of the line, through the solenoid, through the normally closed contacts of the relay (K-1800), through the cam-operated contact (S-1800) (the contact is on the high part of the cam), and to the grounded side of the line (see figure 2-23). The energized solenoid closes the knock-out contact (S-1801) which energizes the remote control relay. The relay energizing circuit is traced from the ungrounded side of the line, through the relay, through the now closed knock-out contact, and to the ground side of the line. The relay contacts perform two functions: first, the normally open contacts (now closed) place a holding circuit on the relay by switching the ground side of the line through the cam-operated contacts to the relay instead of through the knock-out contact: second, the normally closed contacts of the relay (now open) break the circuit of the solenoid. The solenoid drops to its normal position and opens the knock-out contact. The holding circuit described previously prevents the relay from being de-energized. The a-c relay is continuously energized except when the cam-operated contact cam follower drops into the low dwell. The stamping action does not take place until the relay is re-energized at the high dwell of the cam.

The minute cam rotates until the cam-operated contact falls into the indent, breaking the relay operating circuit and de-energizing the relay. The operating circuit of the solenoid is thus partially completed. The cam rotates until the cam-operated contact closes. The solenoid is energized, the knock-out contact closed, and the relay is energized, thus de-energizing the solenoid.

The control contact, when closed, connects the relay to the ground side of the line so that the relay is not de-energized when the cam contact is operated, and, therefore, the solenoid cannot be energized at this time.

(2) DRIVE MECHANISM.—The minute cam is driven at one rpm by a synchronous motor which runs continuously. The cam wiper portion of the ratchet lock lever rides the minute cam, and, as the high point of the cam moves around, the cam wiper moves forward. The lower end of the cam wiper is linked to a drive lever and drive pawl. As the wiper and link are moved by the cam, the drive pawl drops into the next tooth on the ratchet (see figure 2-24).

When the cam wiper drops from the high side of the cam each minute, the drive pawl moves the ratchet forward one tooth. The ratchet is secured to the typewheel drive shaft; thus the minute typewheel is moved to the equivalent of one minute. A spring attached to the drive pawl returns the cam wiper to the low side of the cam. A retaining pawl holds the ratchet in place,

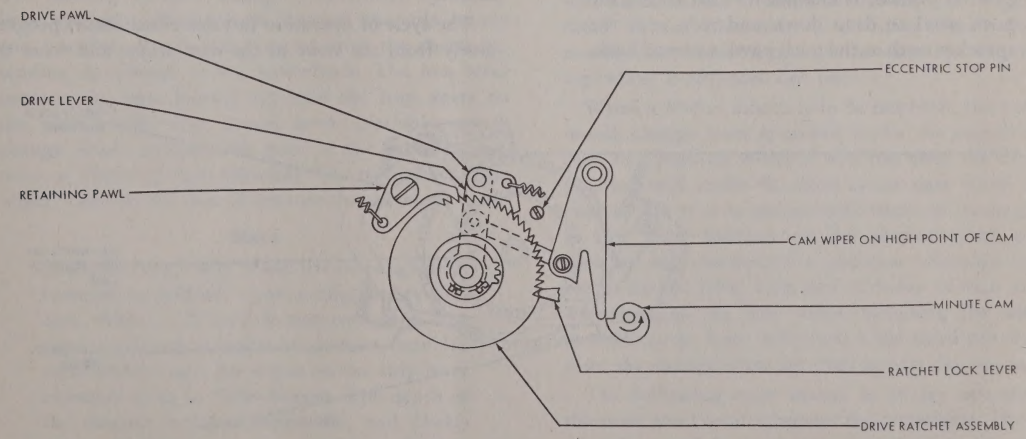

Figure 2—24. Minute Drive Assembly

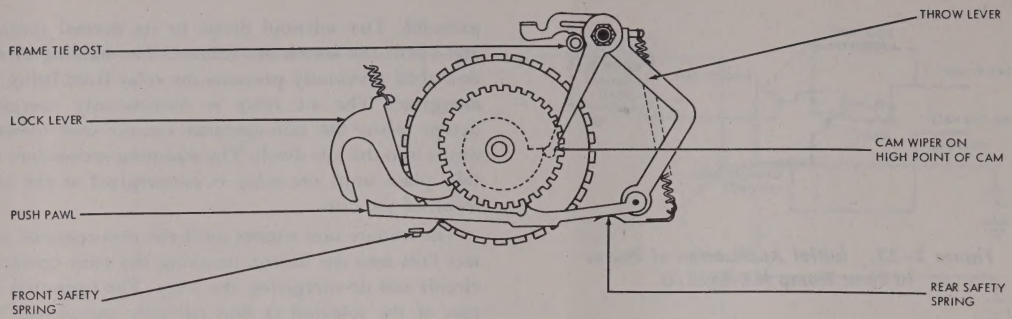

Figure 2–25. Push Pawl in Retracted Position

and, as the minute cam rotates, the ratchet lock lever moves in between two of the ratchet teeth to lock it in position. An eccentric stud governs the travel of the drive pawl and wedges it into the ratchet until after the ratchet lock lever is moved into its locking position.

(3) TYPEWHEELS.—All of the typewheels, except the ratchet-driven minute wheel, are advanced by push pawls attached to throw levers. This action is progressive from the minute wheel to the hour wheel as follows. The minute wheel is driven by the ratchet as described in paragraph (2) above. A cam wiper attached to the hour throw lever assembly rides on a cam which is integral with the typewheel drive shaft. As the wiper and throw lever are moved by the cam, the push pawl is moved back and drops behind the next tooth on the hour typewheel sprocket (see figure 2-25).

Note

The hole in the throw lever, to which the push pawl is pinned, is elongated. This allows the push pawl to drop down and ride over the sprocket teeth as the push pawl is moved back. The front and rear safety springs keep the push pawl up against the sprocket as it is moved forward.

As the cam wiper drops from the high side of the cam each hour, the hour throw-lever spring pulls the lever and push pawl forward (see figure 2-26.)

Just before the tooth on the push pawl contacts the gear on the sprocket, the end of the push pawl raises the lock lever out of engagement with the sprocket teeth (see figure 2-27). This allows the push pawl to move the sprocket wheel.

When the sprocket wheel has traveled approximately one third of its total movement, the lock lever drops off the end of the push pawl and rides on top of the teeth of the sprocket wheel. As the sprocket wheel continues to move around, the lock lever drops between the next two teeth, locking it in position. The cycle of operation occurs each hour as the minute wheel makes a complete revolution. Thus the hour wheel is advanced one unit for each revolution of the minute wheel.

The cycle of operation just described occurs progressively from the hour to the date wheel and from the

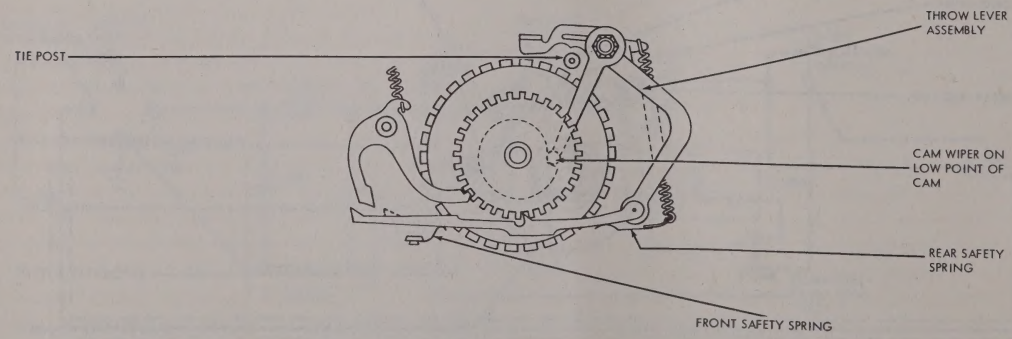

Figure 2–26. Typewheel in Advanced Position

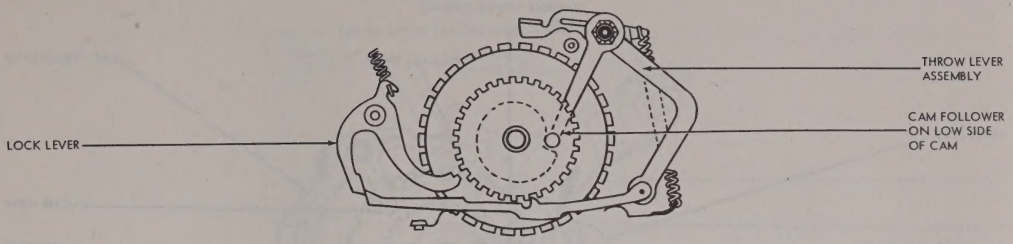

Figure 2—27. Push Pawl Disengaging Lock Lever

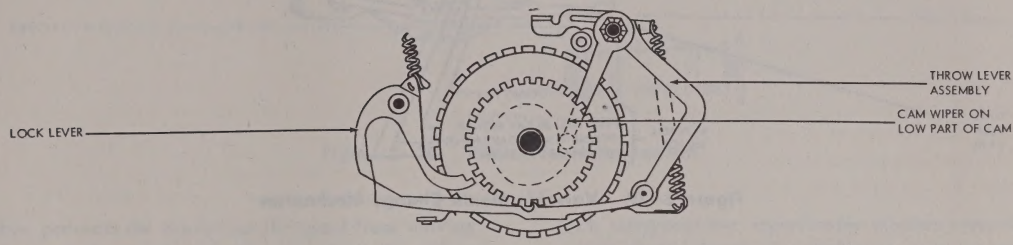

Figure 2—28. Push Pawl Engaging Lock Lever

date to the month wheel. The cam on each wheel operates the cam wiper and throw lever for the succeeding wheel.

The variable change at the end of the month is controlled by a unique arrangement of a movable segment on the date wheel. The segment blocks the lock lever from entering the sprocket teeth until the proper number of days have been skipped. The 29th day of February during leap year is also compensated for by an additional lever contacting a pin on the year wheel. The monthly variable change is controlled by a skip lever assembly which pivots between the side frames and has three levers (all integral with the shaft) extending downward to the typewheels. The first lever contacts the pins located opposite the leap years on the year wheel. The second lever (variable month change lever) contacts the pins in the movable segment of the date-wheel sprocket. The third lever (cam wiper) rides on the cam of the month typewheel.

Note

Since the month date wheel has no progressive function to perform upon a complete revolution, there are 24 months stamped on it. The cam is actually a series of detents (one for each month), and the wiper on the skip-lever assembly rides in these detents. The depth of the detents vary for a 28-, 30-, and 31-day month. Thus the cam wiper positions the skip lever assembly (and the variable month change lever) in or out of the date sprocket depending upon the number of days in each month. (See figure 2-29.)

The date-wheel sprocket has a movable segment containing three teeth. This segment is free to pivot around the sprocket hub and is returned to its normal position by a return spring. When the segment is in its normal position, the three teeth in the segment align perfectly with the teeth in the sprocket. Thus the lock lever drops into each sprocket tooth. The date wheel will be advanced 31 times before the cam wiper (located on the other side of the date wheel) for the month throw lever drops off the cam, and the month typewheel is advanced one unit.

When a 30-day month is to be recorded, the variable month change lever is moved in, by the month-wheel cam, to a position where it will just clear the first two pins but will strike the third as the date wheel is advanced. The pins in the movable segment are staggered so that their location on the circumference of the sprocket will correspond to points at which the change occurs for the 28th, 29th, and 30th day of each month. Therefore, as the date wheel advances, the variable month change lever will contact the third pin slightly after the change from the 30th to 31st day has started.

The following cycle occurs in 30-day operation as the push pawl lever advances the typewheel. The push pawl is moved forward, raises the lock lever, and advances the typewheel. Normally the push pawl releases

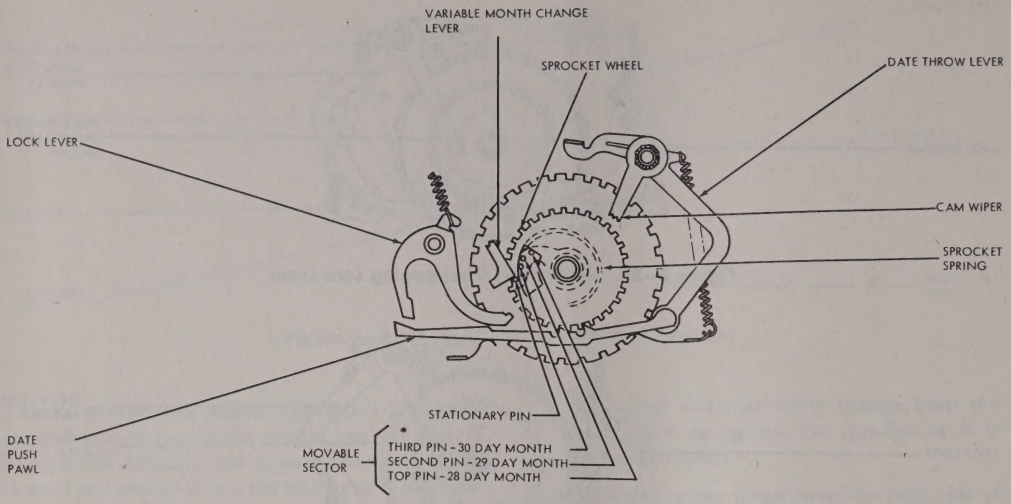

Figure 2–29. Variable Month Change Mechanism

the lock lever after advancing the typewheel one third of its total travel, and the lock lever drops into the next tooth on the sprocket. However, note that as the typewheel is advanced in this case, the variable month change lever has contacted the third pin and has moved the segment down. This movement of the segment causes its teeth, which are normally meshed with the sprocket, to move down. Thus, the position in the sprocket teeth corresponding to the 31st day of the month is blocked by a tooth of the segment. The push pawl continues to rotate the typewheel, and the lock lever, since it is blocked by the segment tooth, drops into the next opening, which corresponds to the first of the month. As this cycle occurs, the date wheel is advanced far enough for the cam wiper on the month throw lever (located on the opposite side of the date wheel) to drop off the cam, the month typewheel is thus advanced one unit also. A short month is always followed by a long one, and, as this cycle occurs, the variable month change lever is also moved out of the date wheel by the cam wiper on the skip lever assembly. This action prevents the variable month change lever from jamming the date wheel on the stationary pin located in the sprocket; however, the lever is not withdrawn until the month wheel changes. The stationary pin hitting the variable month change lever also prevents the date wheel from going past the first when changing from a 28-day month.

The cycle of operation for a change from the 28th or 29th to the first is the same as that previously described, except for the location of the variable month change lever. During the month of February the lever is positioned so that it contacts the third pin in the segment; the segment will then be moved far enough to block the teeth in the sprocket corresponding to the 29th, 30th, and 31st days of the month, and the lock lever will drop in on the first. The 29th day of February during leap year is compensated for by an arm on the skip lever assembly which contacts a pin on the year wheel. This positions the variable month change lever so that it skips the first pin and contacts the second pin in the segment as the date wheel is advanced. The segment will then be moved far enough to block the teeth in the sprocket corresponding to the 30th and 31st days of the month.

(4) RIBBON FEED MECHANISM. *(See figure 2-30.)*—The ribbon feed mechanism and ratchets are mounted on the typehead left side frame. The two ratchets are identical but are mounted opposite each other because of the method for feeding the ribbon. The ribbon feed mechanism is mounted on the ribbon ratchet mounting plate at the back of the typehead base. A lever pinned to one of the arms of the fork plate assembly is actuated up and down each time the tape is stamped. A pawl riveted to this lever engages the teeth of the ratchet wheel mounted on the plate and advances the ratchet one tooth each time the tape is stamped.

A ribbon-wind operating link, with one end over a pin on the ratchet wheel and the other over a pin on the ribbon feed shift assembly, drives the ribbon feed assembly forward and back again as the ratchet makes a complete revolution. The feed pawls on the ends of the ribbon feed shift drive the ribbon-wind ratchet wheels as the feed shift is moved back and forth. When the ribbon spool becomes empty, the tension on the

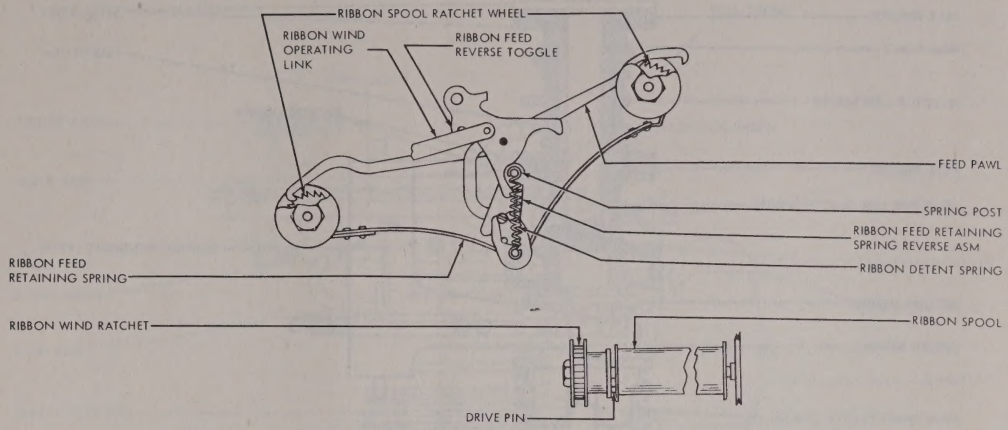

Figure 2—30. Ribbon Feed Mechanism

ribbon prevents the ratchet on the spool from moving. This causes the toggle assembly (to which the ribbon-wind operating link is attached) to reverse. When the toggle reverses, the pawl that was driving the ribbon ratchet is moved out of engagement with the ratchet wheel, and the opposite end of the pawl is positioned to drive the other ribbon ratchet. The tape will now wind in the opposite direction.

d. TELETYPEWRITER REPERFORATOR TT-161/FGC-38, TT-162/FGC-38X, TT-163/FGC-39, TT-164/FGC-38, TT-165/FGC-38X, OR TT-166/FGC-39.—The teletypewriter reperforator serves as a receiving-only tape printing and reperforating telegraph set when connected to the terminal facilities of a wire or radio-telegraph circuit. The teletypewriter reperforator operates on a signal-line current of 0.060 ampere and must recline neutral signals. Synchronous motors in the reperforator require a power supply of 110 volts ± 10 percent, 60-cycle, single-phase alternating current. Governed motors require a power supply of 110 volts ± 10 percent, 50-60 cycle, single-phase alternating current. To avoid excessive loss in receiving margin with the synchronous motor, the frequency regulation must be within ± 0.75 percent. Small differences in speed between the receiving and transmitting equipment are compensated for by the use of the start and stop impulses in the teletypewriter code. The receiving mechanism rotates at a greater speed than the transmitting mechanism with the result that it will come to a complete stop between each group of impulses received. Therefore, small differences in motor speed between the receiving and transmitting equipments will only affect the length of the stop time of the receiving mechanism. All units in the same circuit are thereby kept in synchronism.

Each teletypewriter reperforator consists essentially of a main shaft, rangefinder mechanism, selector mechanism, tape perforating and feeding mechanism, printing mechanism, ribbon feed and reversing mechanism, a signal bell, and a manual tape feed-out lever. Teletypewriter Reperforators TT-161/FGC-38, TT-162/FGC-38X, and TT-163/FGC-39 contain, in addition, an automatic tape feed-out mechanism, a metering mechanism, and a manual tape feed-out push button. Each unit is equipped with a power cord for connecting the motor to the power supply and a cable with a plug for connecting the operating circuits to the associated apparatus.

(1) MAIN SHAFT.—The main shaft is mounted in a vertical position and is supported by ball bearings near its ends. The shaft is driven by the motor through the medium of a pinion and gear (see figure 2-31).

(*a*) Motion for the setting up of selections and the performance of all functions is derived from cams mounted on the main shaft. A selector cam sleeve is fitted over the upper end of the main shaft and is driven through a friction clutch composed of two pairs of steel disks separated by felt washers. The clutch is driven by the two outer disks which are keyed to the main shaft. The selector cam sleeve consists of a stop arm armature cam, locking cam, and six cam teeth (see figure 2-31).

(*b*) The stop arm is located at the top of the cam sleeve and is intercepted each revolution by the stop lever on the rangefinder assembly.

(*c*) The armature cam (uppermost) actuates the armature lever six times during each revolution, five for the group of selecting impulses and once for the stop impulse.

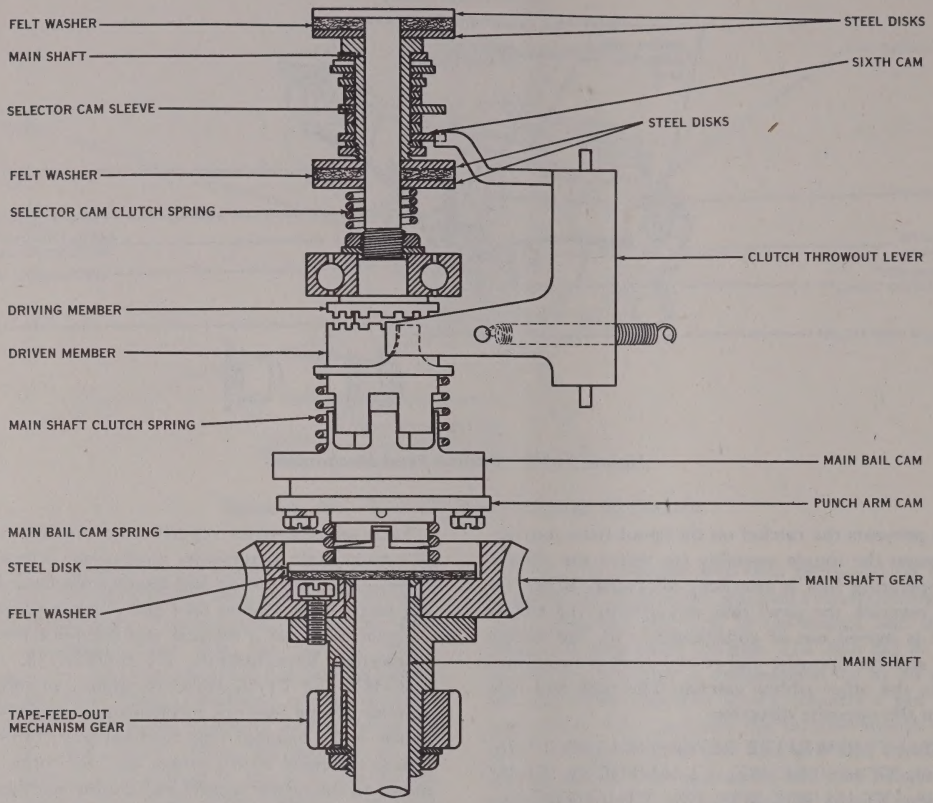

Figure 2—31. Main Shaft Assembly

(*d*) The locking lever cam (second from the top) actuates the locking lever five times during each revolution. The long high part on the cam holds the locking lever out of engagement with the locking wedge during the stop and start impulses. This permits the selector arm to move back and forth during the stop and start impulses without being locked.

(*e*) The five upper cam teeth actuate the five selector levers. The cam teeth are positioned to actuate the selector levers in sequence starting with the top lever (No. 1)

(*f*) The sixth (lower) cam tooth disengages a pivoted clutch throw-out lever from the main shaft clutch. Disengagement of this lever allows the clutch to engage and impart motion to the main bail cam and punch arm cam. The sixth cam is positioned to release the clutch near the end of each revolution of the selector cam sleeve.

(*g*) A helical gear located near the lower end of the main shaft provides a drive for the automatic tape feed-out mechanism on the receiving unit. This gear is also supplied on monitoring units to facilitate converting them to receiving units when desired.

(*h*) The main shaft rotates continuously while the motor is running. During the time in which a closed line circuit (MARKING) condition exists, the selector magnet coils are energized and hold the armature against the magnet core. In this stop position, the selector cam sleeve is held stationary under control of the stop lever on the rangefinder mechanism and the ratchet-tooth clutch is held disengaged by the clutch throw-out lever. While any code combination is being received, the selector cam sleeve makes one revolution. The main bail cam and punch arm cam, under control of the selector cam sleeve through the medium of the clutch throw-out lever, makes one revolution subsequent to each revolution of the selector cam sleeve.

(2) RANGEFINDER MECHANISM.—The rangefinder mechanism consists of a mounting plate with a graduated scale, index arm with thumb screw, stop lever, trip latch, bell crank, and trip-latch plunger (see figure 2-32).

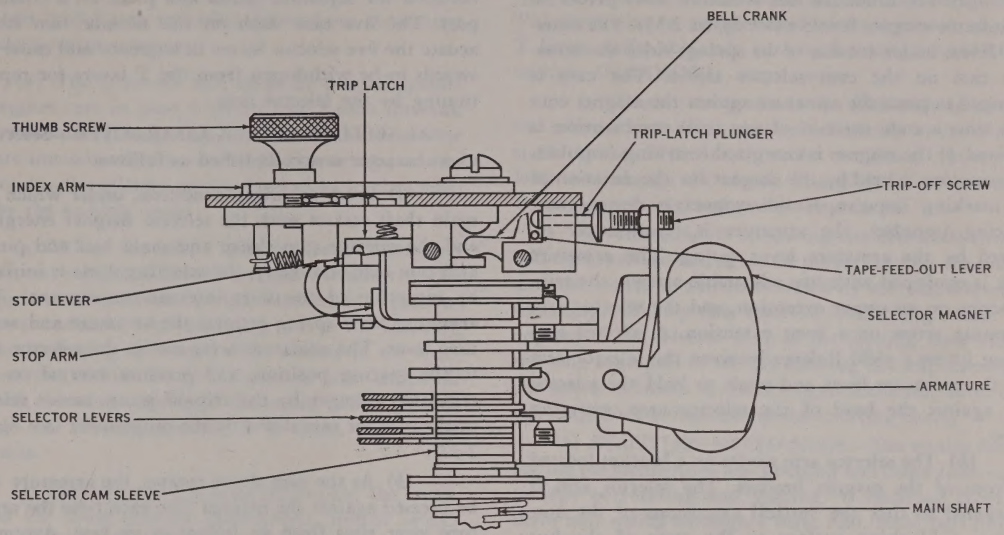

Figure 2—32. Rangefinder Assembly

(*a*) To establish operating margins for the teletypewriter reperforators, the sampling of the signal by the selecting mechanism must occur at the most favorable portion of the signal intervals. This is known as orientation and is accomplished by the rangefinder mechanism. The angular position of the stop lever is controlled by the index arm so that the selector cam sleeve can be stopped at the required position.

(*b*) When the selector magnet is energized by the stop impulse, the stop arm on the selector cam sleeve is blocked by the stop lever and the selector cam sleeve is held stationary. Release of the stop lever occurs when the selector magnet is de-energized by the start impulse. The armature lever presses the trip-off screw against the trip-latch plunger. Movement of the plunger tilts the bell crank and raises the trip latch clear of the stop lever (see figure 2-32). The unlatching of the stop lever releases the stop arm and allows the cam sleeve to rotate.

(3) SELECTOR MECHANISM.—The selector mechanism consists of a selector magnet, armature and armature lever, selector arm, locking lever, and five each of selector levers, swords, and T levers (see figure 2-33). The selector mechanism transforms the selecting intervals of a code combination into motion necessary for positioning the code bars.

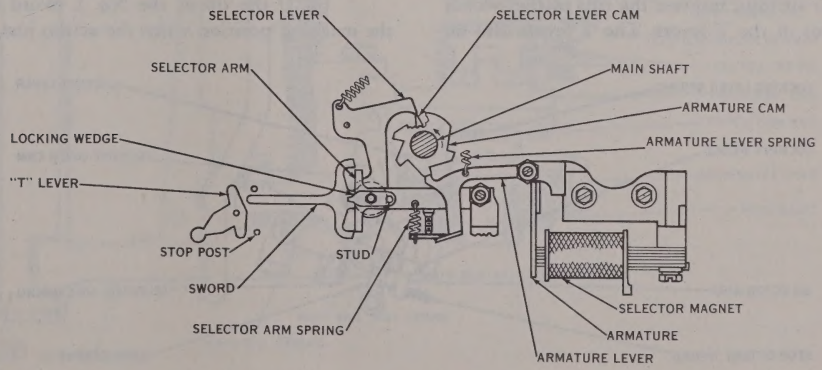

Figure 2—33. Selector Mechanism

(*a*) The armature and armature lever pivots on the selector magnet bracket (see figure 2-33). The armature lever, under tension of its spring, rides the armature cam on the cam selector sleeve. The cam is arranged to press the armature against the magnet core each time a code interval of any code combination is received. If the magnet is energized (marking impulse), the armature is held by the magnet for the duration of the marking impulse. If the magnet is de-energized (spacing impulse), the armature is immediately retracted by the armature lever spring. The armature lever is equipped with two adjustable screws; the trip-off screw on an upper extension, and the selector arm operating screw on a lever extension. A selector arm spring forms a yield linkage between the selector arm and the armature lever and tends to hold the selector arm against the head of the selector arm operating screw.

(*b*) The selector arm pivots on a bracket located in front of the magnet bracket. The selector arm is positioned so that the vertical extensions of the arm present a blocking surface to the arms of the five swords. A locking wedge, with a stud extending downward, is attached to the forward end of the selector arm. A stop detent, into which the stud projects, limits the travel of the selector arm and tends to hold it to either side (see figure 2-34).

(*c*) The locking wedge is acted upon by a locking lever, the forward extension of which locks the selector arm to the right (MARKING) or left (SPACING) as the locking lever drops into each indent of the locking cam on the selector cam sleeve. The locking lever rides its cam under tension from the locking lever spring.

(*d*) The five selecting levers and the swords, which are coupled to the levers by floating pivots, lie between separator plates. The swords are under slight pressure from the leaf springs of these plates. The selector levers pivot on a common post, and, under tension of their springs, impress the tips of the swords against the arms of the T levers. The T levers also lie between the separator plates and pivot on a common post. The five cam teeth on the selector cam sleeve acuate the five selector levers in sequence and cause the swords to be withdrawn from the T levers for repositioning by the selector arm.

(4) SELECTION OF A CHARACTER.—Selection of a character is accomplished as follows:

(*a*) From an idling condition, under which the main shaft rotates with the selector magnet energized and the selector cam sleeve and main bail and punch arm cam held stationary, the selecting cycle is initiated by reception of the start interval (no current). The armature lever spring retracts the armature and armature lever. The armature lever moves the selector arm to the spacing position, and pressure exerted on the trip-latch plunger by the trip-off screw causes release of the selector cam sleeve by the rangefinder (see figure 2-32).

(*b*) As the cam sleeve rotates, the armature will be pressed against the magnet core each time the armature lever rises from an indent in its cam. Assuming that code intervals representing the character Y are being applied to the magnet, the first impulse will be a marking impulse. This impulse holds the armature attracted to the magnet, and the selector arm is moved to the marking position. The locking lever drops into an indent of its cam, and the selector arm will be locked in position. When the No. 1 selector lever is actuated by its cam, the No. 1 sword will be withdrawn from the T lever. Assuming the tip of the sword is in the spacing position, as the sword is withdrawn, its marking arm is blocked by the extension on the selector arm and the sword is moved against the marking stop post. When the No. 1 selector lever drops off the peak of its cam, the selector lever spring actuates the lever and causes the tip of the No. 1 sword to be pressed against the left arm of the No. 1 T lever, rotating it counterclockwise.

(*c*) If the tip of the No. 1 sword is already in the marking position when the action just described in

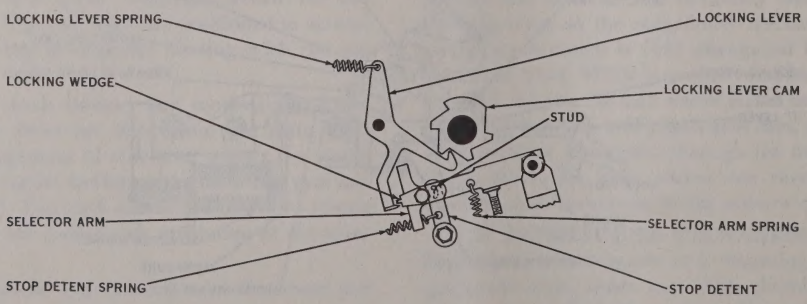

Figure 2—34. Locking Lever and Locking Wedge

(*b*) occurs, it will not require repositioning. The sword is merely withdrawn and returned without contacting the selector arm extension.

(*d*) The armature will again be pressed against the magnet core in time with the No. 2 code interval. Since this interval is spacing, the armature and selector arm are immediately returned to their spacing position in time for the selector arm to be locked in that position by the locking lever.

(*e*) When the No. 2 selector lever is actuated by its cam, the No. 2 sword will be withdrawn. The spacing arm of the sword is then blocked by the extension of the selector arm (assuming it is in the marking position), causing the sword to be shifted to the spacing position. When the No. 2 selector lever drops off the peak of its cam, the tip of the sword will be pressed against the arm of the No. 2 T lever, rotating it clockwise.

(*f*) Corresponding actions accompany the reception of the third impulse MARKING, fourth SPACING, and fifth MARKING, for completion of the Y character selection. Subsequently Nos. 3 and 5 T levers will assume positions corresponding to No. 1, while No. 4 will correspond to No. 2. One end of each T lever extends into the notch of the associated code bar. The code bars are positioned horizontally between spacers mounted on two studs on the pull bar guide. The clockwise or counter-clockwise movement of the T levers shifts the code bars to the left (SPACING) or right (MARKING), respectively.

(*g*) During reception of the fifth code interval, the selector cam sleeve rotates sufficiently to cause the sixth cam tooth (lower) to strike the clutch throw-out lever and engage the clutch. Engaging the clutch initiates the printing and perforating cycle.

(*h*) Immediately following the fifth code interval, the armature will again be pressed against the magnet core where it will be retained by the stop impulse (marking). During this interval, no locking action is applied to the selector arm, as the locking lever rides the long high part of its cam. During the stop interval, the stop arm comes to the rest against the stop lever on the rangefinder, thus ending the selecting cycle.

(5) PRINTING MECHANISM.—The motive force for the performance of the printing and other functions (except perforating and spacing) is obtained from a main bail spring through a main bail, main bail plunger, main bail lever, main bail crank roller, and main bail cam (see figure 2-35). In the normal stop position, the main bell crank roller is on the high part of its cam. In this position the main bail holds the pull bars forward away from the code bars so that the code bars may be positioned by the T levers.

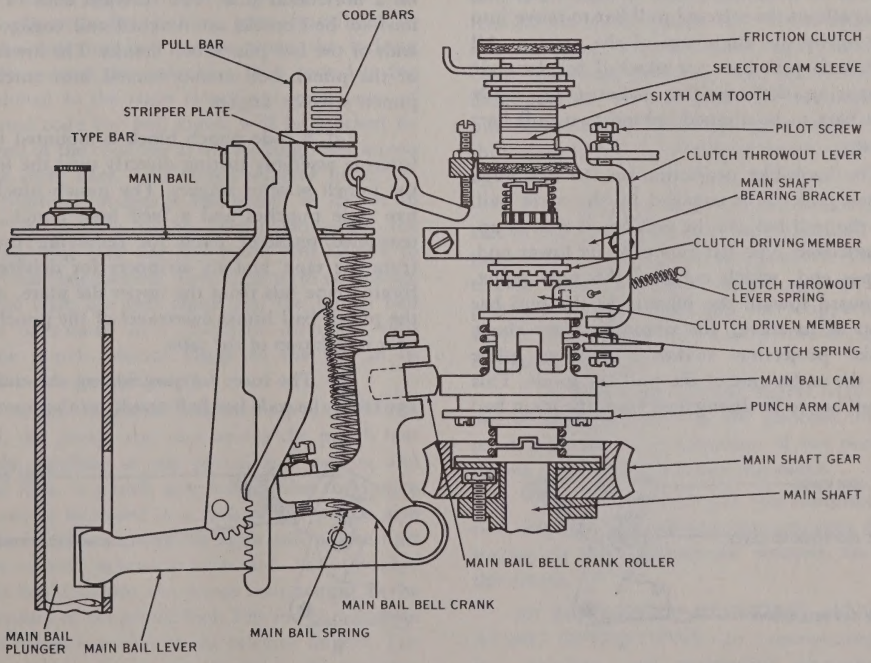

Figure 2–35. Printing Mechanism

The pull bars are positioned vertically in a type bar segment and in the pull bar guide with the upper ends in front of the notched code bars. Springs hold the pull bars against the main bail or code bars. The rear edge of each pull bar has a hook-like projection which engages the main bail (when a pull bar is selected) as it moves upward, causing that bar to be raised. The lower end of each pull bar forms a rack and gear connection with the associated type bar. The type bars pivot on a fulcrum rod at their lower ends so that movement of a pull bar by the main bail causes the type bar to pivot downward toward the platen.

(6) PRINTING OF A SELECTED CHARACTER.—Printing of a selected character is accomplished as follows:

(*a*) Following the selecting cycle, the sixth (lower) cam on the cam sleeve strikes the clutch throwout lever, causing the clutch to engage. This allows the main bail and punch arm cams to make one revolution. As the main bail cam rotates, the main bail bell crank roller rides the low part of the cam, allowing the main bail spring to pull the main bail upward. As the main bail moves upward, pressure is removed from the back of the pull bars, permitting the pull bar springs to move the pull bars toward the code bars.

(*b*) The notches in the five code bars are arranged so that when a character is selected, the notches will all be aligned behind the corresponding pull bar. This allows the selected pull bar to move into the path set up by the alignment of the notches. All other (unselected) pull bars are blocked by the code bars as the spacing of the notches makes it impossible for the code bars to be aligned behind two pull bars simultaneously.

(*c*) The hook-like projection on the rear edge of the selected pull bar is engaged by the main bail, thus raising the pull bar. As the pull bar is moved upward, the associated type bar pivots at its lower end, and the upper end, which contains the type pallet, moves downward toward the platen. As the pull bar nears the top of its travel, the sloping surface above the hook-like projection strikes a stripper plate mounted on the under side of the pull bar guide. This causes the pull bar to be disengaged from the main bail shortly before the type bar reaches the platen. Momentum carries the type bar the remaining distance to the platen.

(*d*) During the first part of the upward stroke of the main bail, a locking lever (figure 2-36) is brought into engagement with the "V" shaped notches in the code bars. The code bar locking lever is located in the extreme right-hand slot of the pull bar guide. It is similar to the pull bars, but does not have the hook-like projection on its rear edge. After each of the code bars has been positioned in accordance with the five selecting impulses, the locking lever spring pulls the lever into engagement with the notches in the code bars. This locks the code bars in position after each selection and holds them in that position until the main bail nears the end of its downward stroke and cams the locking lever out of engagement. When the code bars are not engaged by the locking lever, they are free to be positioned by the selector swords and T levers.

(7) PERFORATING MECHANISM.—The code bar bell cranks lie between separator plates and pivot on a vertical stud (see figure 2-36). The forward ends of the code bar cranks make contact with the upper ends of vertical links which pivot on a horizontal stud. The lower ends of the vertical links connect with the upper ends of intermediate bell cranks which pivot on a horizontal stud. The forward ends of the intermediate bell cranks are notched and engage the right ends of the five punch bell cranks. The lower left ends of the punch bell cranks extend into notches in the punch selector fingers.

(*a*) A code punch block is mounted to the perforating assembly casting directly over the left ends of the punch selector fingers. The punch block contains five code punches and a feed hole punch, a spring-tensioned retractor plate for removing the punches from the tape, and six strippers for driving the perforated tape lids from the upper die plate. A screw in the punch bail limits overtravel of the punches to prevent mutilation of the tape.

(*b*) The force for positioning the train of linkage from the code bar bell cranks to the punch selector

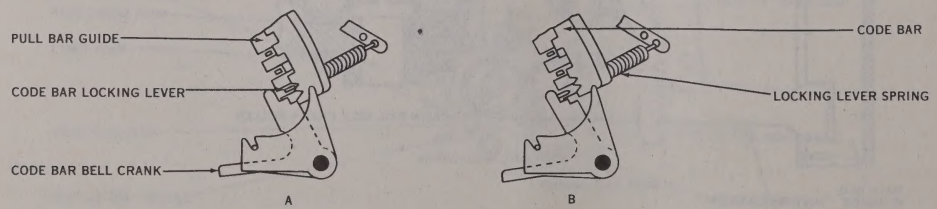

Figure 2—36. Code Bar Locking Lever

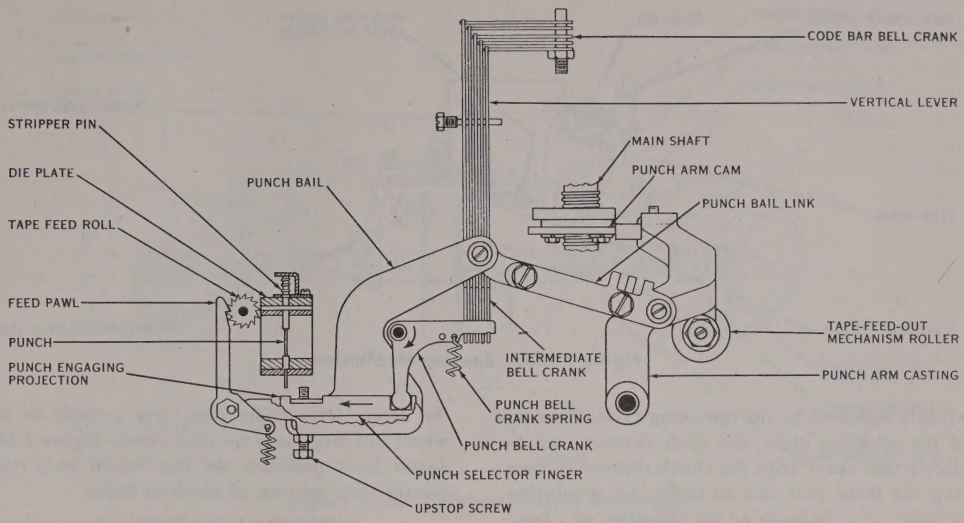

Figure 2–37. Perforating Mechanism

fingers is derived from the punch bell crank springs (see figure 2-37).

(*c*) The positioning of the punch selector fingers occurs early in the upward stroke of the main bail. The motion of the code bar locking lever is utilized to position the code bar bell cranks when the locking lever moves toward the code bars. If a code bar has been positioned to the right (marking), movement of the associated code bar bell crank will be blocked by the right end of the code bar as the locking lever moves toward the code bars. The punch selector finger remains in position to engage the punch as shown in figure 2-37. If the code bar has been positioned to the left (spacing), the code bar bell crank will be free to follow the code bar locking lever. The train of linkage between the code bar bell crank and the punch bell crank will be rotated in a clockwise direction, thus moving the punch selector finger to the left so its recess will be under the punch.

(*d*) When the punch selector fingers have been positioned, the punch arm cam moves the punch bail through the medium of the punch arm casting and punch bail link. A punch arm roller rides the punch arm cam and is mounted in a fork of the punch arm casting which extends along the right side of the unit and pivots on pilot screws at each end. An adjustable punch bail link connects the punch arm casting to the upper extension of the punch bail. The lower extension of the bail forms a guide for the selector fingers. The bail pivots on two pilot screws located in the perforating assembly casting.

(8) CODE PERFORATION.—Code perforation is accomplished as follows:

(*a*) Following the selecting cycle, the punch arm cam is allowed to rotate. Rotation of this cam transfers motion to the punch bail which raises the punch selector fingers. Punch selector fingers which are to the right (punching position) will drive their respective code punches up and perforate the tape. The feed punch is engaged by an extension on the punch bail, thus a feed hole is perforated each time the bail is operated.

(*b*) As the punch arm roller moves to the low side of the punch arm cam, the punch bail and selector fingers are lowered from the punches. The punch retractor, under tension of its two springs, removes the punches from the tape and the strippers, under tension of their springs, drive the peforated tape lids from the upper guide plate.

(*c*) When the selector fingers have been moved out of engagement with the punches, the tape feed pawl, attached to an extension of the punch bail, advances the feed roll ratchet one notch.

(*d*) As the punch arm cam completes its revolution, the clutch throw-out lever engages the camming surface on the clutch-driven member, and disengages the clutch.

(9) SELECTING, PRINTING, AND PERFORATING OPERATIONS.—In summarizing the selecting, printing, and perforating operations just described, it should be noted that the selecting cycle is

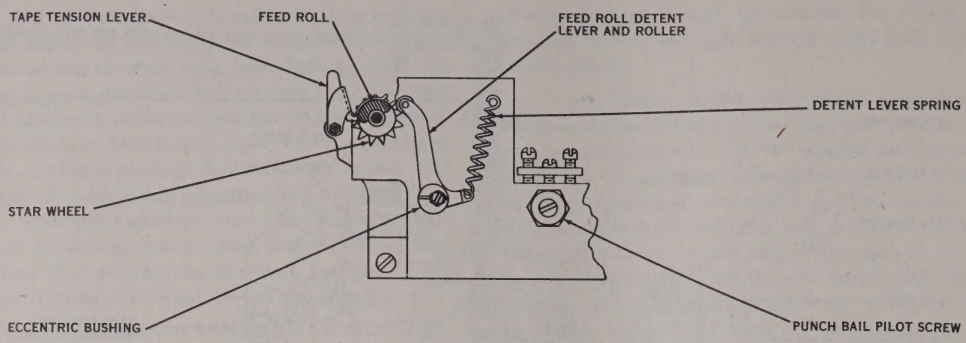

Figure 2–38. Spacing Mechanism

immediately followed by the operating cycle. Near the end of the selecting cycle, the sixth (lower) cam on the selector cam sleeve trips the clutch throw-out lever, allowing the main bail cam to make one revolution. The printing of a character or the operation of a function requires time equivalent to both a selecting and operating cycle. However the positioning of the selector swords for the selection of the next character may be made while the locking lever locks the code bars into place for the performance of the previous operation. When the locking lever releases the code bars, they will immediately assume the position for the character selected. Overlapping action is thereby effected.

(10) SPACING MECHANISM.—The spacing mechanism consists of a feed roll with feed pins and teeth, feed pawl, tape tension lever, star wheel, and detent lever with roller (see figures 2-37 and 2-38).

The feed holes in the tape engage the pins on the feed roll. The tape is fed over the roll and under the tape tension lever which holds the tape in engagement with the feed pins. As the punch bail moves upward, the feed pawl is also moved upward and engages the next higher tooth on the feed roll. As the punch bail moves down, the feed pawl rotates the feed roll one tooth (figure 2-37). When the feed roll is advanced, the detent lever roller rides over a tooth on the star wheel and drops into the next indent (figure 2-38). The detent lever positions the star wheel each time and insures even spacing of the feed holes.

(11) RIBBON MECHANISM.—Each ribbon spool is mounted on one end of a shaft, with a bevel gear attached to the opposite end (see figure 2-39). A ribbon feed shaft, with a bevel gear at each end and a ratchet wheel in the center, is mounted horizontally across the rear of the unit. The feed shaft can be shifted laterally so the right bevel gear will mesh with the right ribbon spool shaft bevel gear or so the left bevel gear will mesh with the left ribbon spool shaft bevel gear. A ribbon feed lever, mounted behind the tape feed shaft, contains a roller which rides on the main bail plunger. Attached to the upper end of the lever is a ribbon feed pawl which engages the teeth on the ribbon feed ratchet wheel. As the main bail moves upward, the ribbon feed lever roller drops into the indent on the main bail plunger, causing the feed pawl to move to the rear and engage a tooth on the ribbon feed ratchet wheel. As the main bail moves downward, the ribbon feed lever roller rides out of the indent in the main bail plunger, causing the ribbon feed pawl to move forward and rotate the ribbon feed ratchet wheel. This

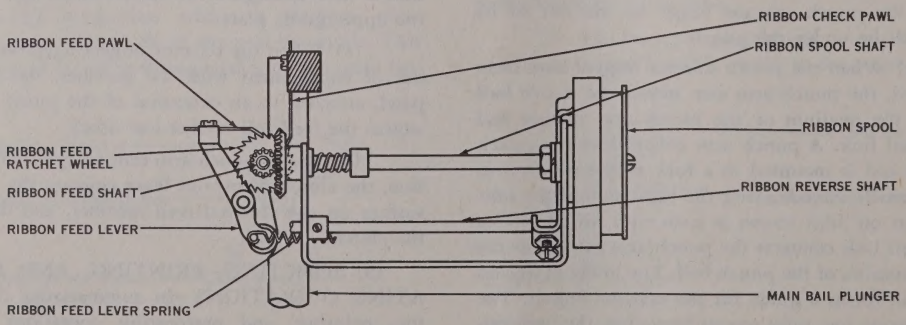

Figure 2–39. Ribbon Mechanism

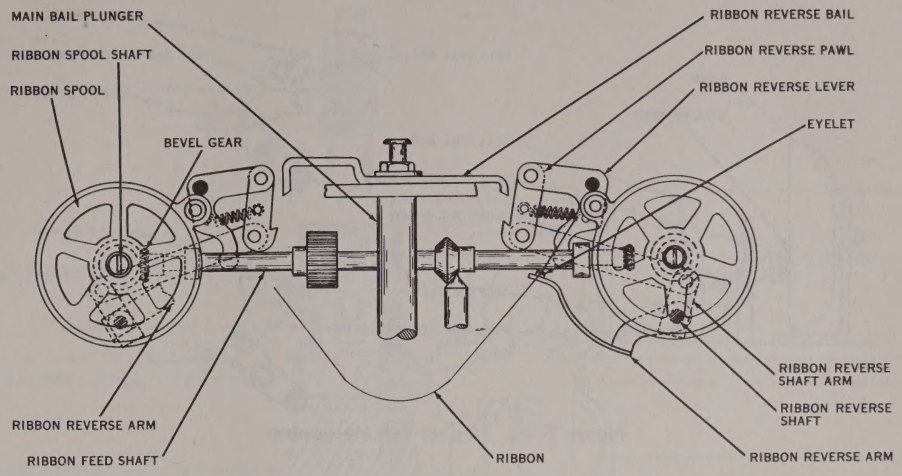

Figure 2—40. Ribbon Reverse Mechanism

motion is transferred through the bevel gear arrangement to a ribbon spool shaft, causing one of the ribbon spools to revolve.

The ribbon is automatically reversed when it has become completely unwound from one spool. This is accomplished by disengaging one set of bevel gears and engaging the other set. Assuming that the ribbon is being wound on the left ribbon spool, reversing occurs as follows.

When the ribbon is almost unwound from the right spool, an eyelet in the ribbon will catch in the right ribbon reverse arm and move it downward. Motion is transferred through the ribbon reverse shaft, reverse shaft arm, and reverse pawl link to the right ribbon reverse pawl. The ribbon reverse pawl moves into the path of the ribbon reverse bail (see figure 2-40). As the main bail moves downward, the ribbon reverse bail engages the ribbon reverse pawl, causing the ribbon reverse lever to engage a shoulder on the ribbon feed shaft and move it to the right. The shifting of the ribbon feed shaft disengages the left set of bevel gears and engages the right set. The ribbon will then be wound on the right ribbon spool.

The reversing operation takes place in a similar manner on the left ribbon spool assembly when the eyelet near the left end of the ribbon engages the slot in the left ribbon reverse arm.

(12) UPPER AND LOWER CASE SHIFT MECHANISM.—The platen is a plastic cylinder that sets in the platen block mounted on the platen shaft which may be shifted back and forth beneath the tape. The platen shaft and a platen guide shaft extend through

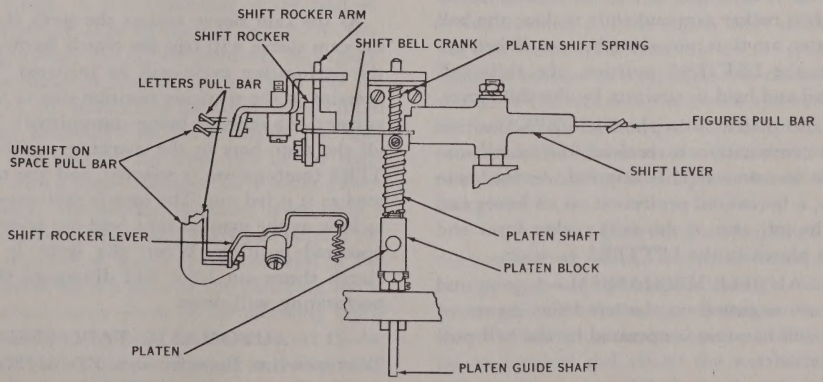

Figure 2—41. Upper and Lower Case Shift Mechanism

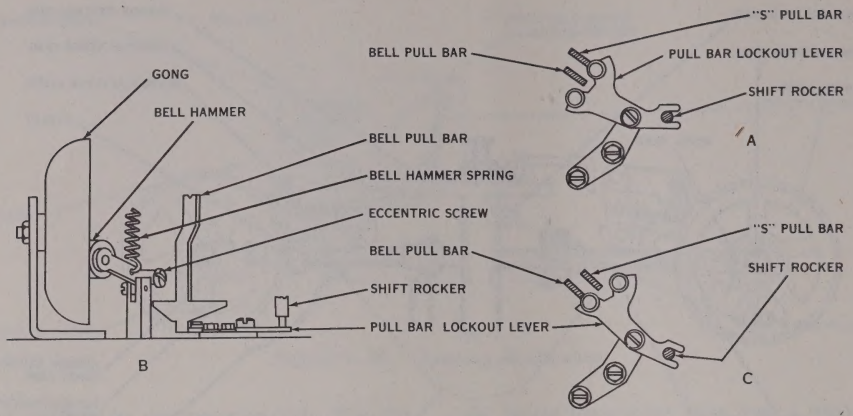

Figure 2—42. Signal Bell Mechanism

guide holes provided in the perforating assembly casting (see figure 2-41).

(*a*) In order to shift the platen from the LETTERS to the FIGURES position, the figures pull bar (extreme right next to the locking lever) must be selected. As the main bail moves upward, the figures pull bar is raised, and a horizontal projection on the lower end of the pull bar engages the shift lever and unlatches it from the shift bell crank on the platen shaft. The platen shift spring moves the platen block to the FIGURES (forward) position. The platen is then in position to receive the figures (upper case) characters of the type pallets.

(*b*) In order to shift the platen from the FIGURES to the LETTERS position, the letters pull bar (second from the left) must be selected. As the main bail moves upward, the letters pull bar is raised; a horizontal projection on its lower end engages the left arm of the shift rocker lever and rotates it about its pivot. Motion is thus transferred to the shift bell crank through the shift rocker arm and shift rocker; the bell crank, and platen are thus moved to the rear. When the platen reaches the LETTERS position, the shift bell crank is latched and held in position by the shift lever.

(*c*) If the platen is in the FIGURES position and the space combination is received, the unshift-on-space pull bar (extreme left) is selected. As the main bail moves up, a horizontal projection on its lower end will engage the left arm of the shift rocker lever and will move the platen to the LETTERS position.

(13) SIGNAL BELL MECHANISM.—A gong and bell hammer are mounted on the left front corner of the unit. The bell hammer is operated by the bell pull bar (third from left).

(*a*) When the platen is moved to the FIGURES position, a lower extension of the shift rocker positions the lock-out lever in front of the S pull bar, allowing the selection of the bell pull bar (see figure 2-42A).

(*b*) As the selected bell pull bar is raised by the main bail, a horizontal projection on its lower end engages the eccentric screw on the bell hammer. The hammer then rotates about its pivot and strikes the gong (see figure 2-42B).

(*c*) When the platen is moved to the LETTERS position, the lock-out lever is positioned in front of the bell pull bar, allowing the selection of the S pull bar (see figure 2-42C).

(14) MANUAL TAPE FEED-OUT LEVER.—A manual tape feed-out lever is mounted on the rear rangefinder mounting post. Its forward extension is positioned in back of the bell crank on the rangefinder and its rear extension is provided with a bakelite handle. Operation of the lever tilts the bell crank and raises the trip latch clear of the stop lever, allowing the selector cam sleeve to rotate.

As the cam sleeve rotates the sixth (lower) cam on the cam sleeve will trip the clutch throw-out lever and the perforating cycle will be initiated. The armature remains in the marking position due to the steady line current, (no message being transmitted). This positions all the code bars in the marking position. The LETTERS combination is selected, and the tape is perforated as it is fed out. The tape is perforated and fed out as long as the manual tape feed-out lever is held in its operated position. When the lever is released, the clutch throw-out lever will disengage the clutch and perforating will cease.

(15) AUTOMATIC TAPE FEED OUT.—The Teletypewriter Reperforators TT-161/FGC-38, TT-162/FGC-38X, and TT-163/FGC-39 are provided with a mechanism for feeding out a predetermined amount of

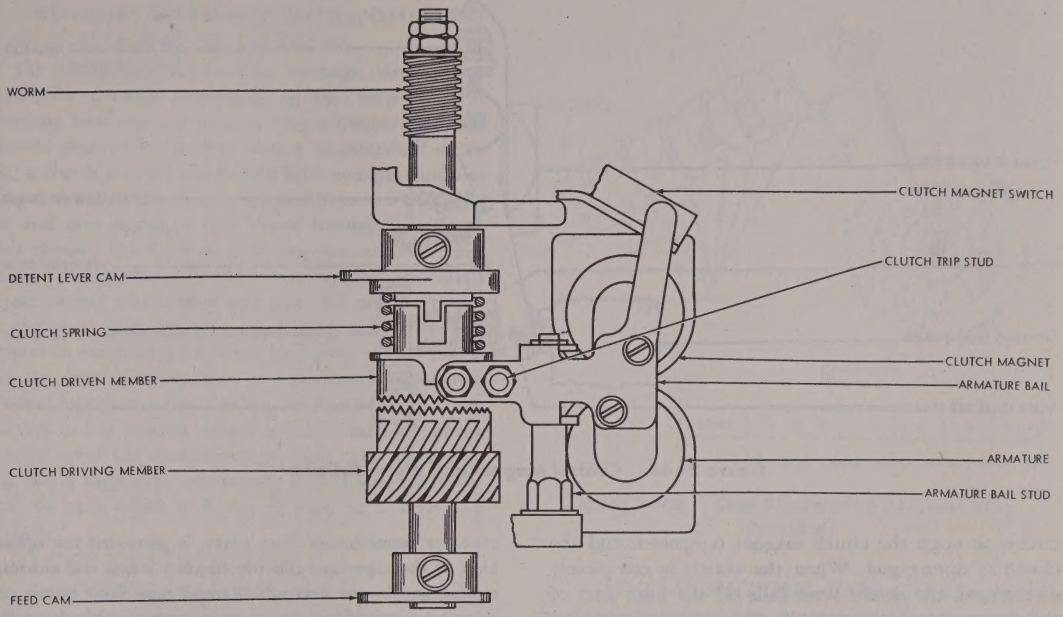

Figure 2—43. Automatic Tape Feed Out, Main Shaft, and Clutch Assembly

tape automatically when the signal line becomes idle for a period of approximately 500 milli-seconds. The other units, TT-164/FGC-138, TT-165/FGC-38X, and TT-166/FGC-39 are not equipped for automatic tape feed out.

(*a*) The tape feed-out and metering mechanism (see figures 2-43 through 2-45) is mounted at the right rear corner of the unit. A clutch magnet is mounted directly beneath an armature to which a pivoted armature bail is secured. The armature bail disengages a stud on its left extension from the driven member of a ratchet tooth clutch. A rear extension of the bail actuates the plunger of a clutch magnet switch. A compression spring causes the clutch members to engage. The driving member is meshed with a gear on the lower portion of the main shaft. Rotation of the clutch shaft is thereby controlled by the armature bail and the clutch. A feed cam on the front end of the shaft makes contact with a roller mounted on a lower extension of the punch arm casting. A detent lever rides a detent cam mounted on the clutch shaft just behind the driven clutch member. A worm at the rear end of the clutch shaft meshes with a gear on the metering shaft. This gear in turn drives a worm on the metering shaft. A worm follower, which pivots on the armature of the control magnet, has a stud at its lower end that rides the metering shaft worm. A projection on the lower end of the follower engages the plunger of the metering switch. Operation of this switch opens the circuit through the clutch magnet.

(*b*) The automatic tape feed out should begin approximately half a second after completion of a message received by typing reperforator. Automatic tape feed out is accomplished by the operation of control relays in the control panels due to a constant marking condition on the line. The clutch magnets and the control magnet are energized through the contacts of these control relays.

(*c*) When the clutch magnet is energized, the armature bail raises the trip stud clear of the clutch driven member and the clutch shaft starts to rotate. As the shaft rotates, the feed cam on the front of the shaft transfers motion to the punch arm casting in a manner similar to the action of the punch arm cam on the main shaft. The tape is then perforated and fed through the punch block. The feed cam continues to operate the punch arm casting as long as the clutch magnet is energized.

(*d*) When the clutch shaft rotates, the worm on the rear end of the shaft transfers motion to the worm on the metering mechanism through the medium of a worm gear. When the control magnet is energized, the worm follower on the armature of the control magnet moves forward and allows the worm follower stud to engage the worm. When the worm follower moves across the worm and contacts the metering switch, the

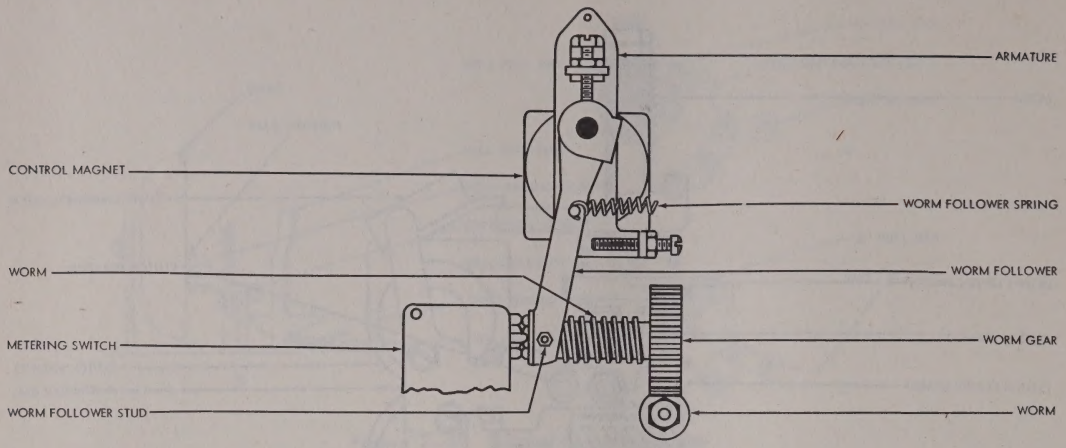

Figure 2—44. Control Magnet and Worm Follower

circuit through the clutch magnet is opened, and the clutch is disengaged. When the clutch is completely disengaged, the detent lever falls off the high part of the detent cam on the clutch shaft and prevents any reverse rotation of the shaft.

(*e*) The mechanism is noninterfering in its operation which means that it will not interfere with the recording of a message that might begin while tape is being fed out. If reception of code impulses should start while the tape feed-out mechanism is operating, the start impulse will cause the clutch magnet to release with the effect that the tape feed-out clutch will become disengaged and the tape feed-out mechanism will come to rest before the perforating cycle of the first character of the message begins.

(16) MANUAL TAPE FEED OUT.—A manual push button, mounted on the left front corner of the receiver reperforator base plate, is provided for operation of the tape feed-out mechanism when the automatic feature is not desired. Manual tape feed out is obtained by removing straps on a terminal block in the receiver group. This will permit energizing of the clutch magnets by the manual operation of the push button. The external control relays will open the circuit of the manual tape feed out upon the start of any incoming message. The metering mechanism operates for manual as well as automatic tape feed out.

(17) ELECTRICAL CONNECTIONS.—The operating and power circuits are brought out and connected to the upper half of a terminal board located at the rear of the unit. The connections on the lower half of the terminal board terminate in a 15-prong plug and a 3-prong plug which connect to receptacles in the receiver cabinet.

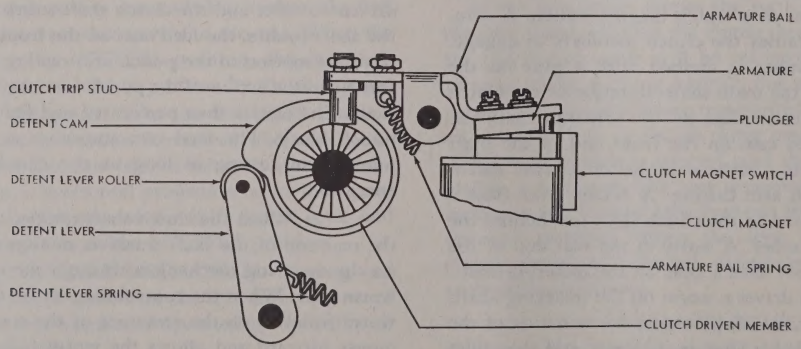

Figure 2—45. Tape Feed-out Mechanism, End View

e. MESSAGE DISTRIBUTOR-TRANSMITTERS TT-167/FGC-38 AND TT-168/FGC-39.

(1) COMPONENTS.—The message distributor-transmitter consists essentially of the following: A mounting base and top plate having a hinged tape lid; a driven gear which meshes with a countershaft drive gear; a clutch magnet assembly which engages and disengages the clutch; a clutch, coupled between the drive gear and cam sleeve; a cam sleeve having cams staggered around the shaft so that the contact levers are actuated in sequence; six contact levers and associated contact points which start and stop the unit or transmit electrical impulses to a signal line; a tape sensing mechanism consisting of levers and pins which transform the code combinations in a perforated tape into electrical impulses; a tape feeding mechanism consisting of levers and a ratchet which automatically advances the tape upon the completion of each cycle of operation; and a tape stop mechanism which automatically stops the unit when it is out of tape or is operated manually.

(2) CYCLE OF OPERATION.

(*a*) CLUTCH MAGNET.—The clutch magnet on the message distributor-transmitter becomes energized by the operation of the letters sensing mechanism on a numbering distributor-transmitter after the number has been transmitted to the signal line. The clutch remains energized until the message is completed and the tape-out sensing mechanism on the message distributor-transmitter is operated.

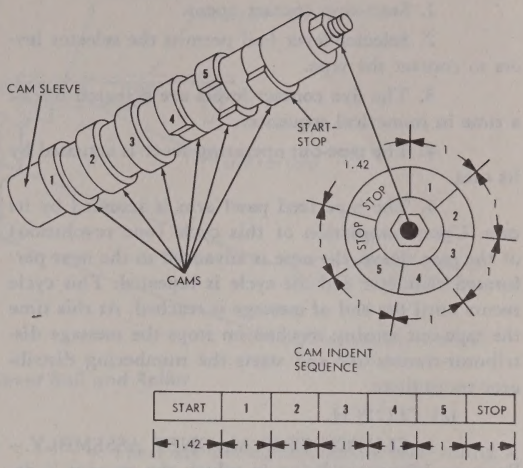

Figure 2—46. Cam Placement on Transmitting Camshaft

(*b*) TRANSMITTING CAM SLEEVE.—When the clutch magnet on the message distributor-transmitter becomes energized, the clutch is engaged and the transmitting cam sleeve is rotated. The transmitting cam sleeve contains cams staggered around the shaft (see figure 2-46).

As the cam sleeve rotates, the individual cams actuate the contact levers to produce the following cycle:

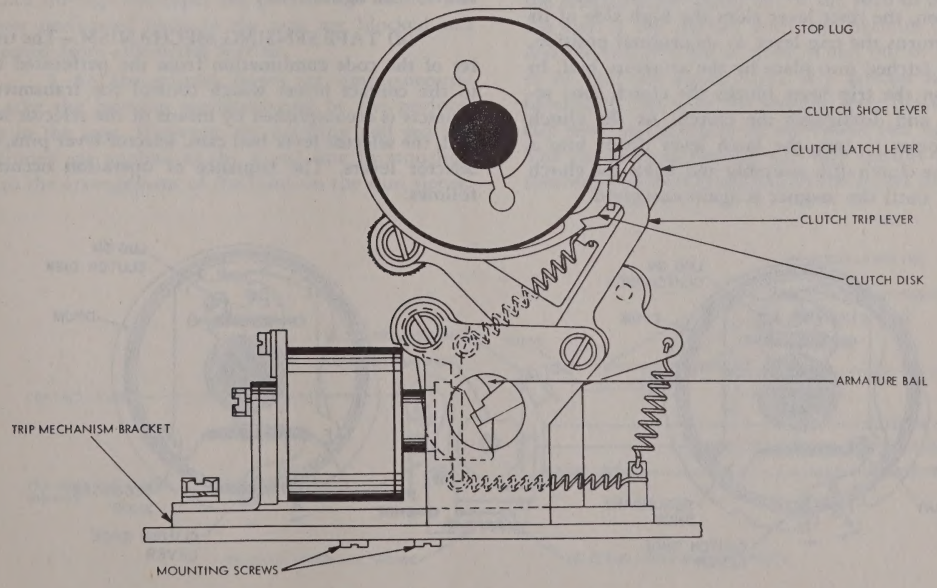

Figure 2—47. Clutch Assembly

1. Start-stop contact opens.

2. Selector lever bail permits the selector levers to contact the tape.

3. The five contact levers are actuated one at a time in numerical sequence.

4. The tape-out operating lever is actuated by its cam.

5. The tape feed pawl arm is actuated by its cam. Upon completion of this cycle (one revolution) of the cam sleeve, the tape is advanced to the next perforated character and the cycle is repeated. This cycle recurs until the end of message is reached. At this time the tape-out sensing mechanism stops the message distributor-transmitter and starts the numbering distributor-transmitter.

(*c*) CLUTCH.

1. CLUTCH TRIP MAGNET ASSEMBLY.—From an idling condition in which the magnet is deenergized, the clutch disengaged, the start-stop contact closed, and the selector pins in their downward position, battery is applied to the clutch magnet. The clutch magnet attracts the armature to the core, and the trip lever is unlatched by the armature bail (see figure 2-47). The trip lever disengages the clutch shoe release lever, permitting the clutch to engage and rotate the cam sleeve assembly. The clutch and cam sleeve assembly will rotate as long as the clutch magnet is energized.

When the clutch magnet circuit is broken, the armature and bail are returned to their original position by the armature spring. As the clutch assembly completes its revolution, the reset lever rides the high side of its cam and returns the trip lever to its original position, where it is latched into place by the armature bail. In this position the trip lever blocks the clutch shoe release lever and disengages the clutch. As the clutch assembly comes to rest, the latch lever drops into a notch on the clutch disk assembly and holds the clutch disengaged until the magnet is again energized.

2. CLUTCH ASSEMBLY.—The clutch is disengaged by moving the lower end of the clutch shoe lever (B) toward the lug on the clutch cam disk. The upper end of the lever contains two ears (C and D) which pivot as the lever is moved and allow the spring to pull the clutch shoes together and out of contact with the drum (see figure 2-48).

The clutch is engaged by releasing the lower end of the clutch shoe lever (see figure 2-49). When the lever is released, its upper end is pivoted about its ear (C). The ear (C) bears against the upper end of the secondary shoe and moves the shoe ear (D) which, in turn, bears against the upper end of the primary shoe. This action forces the primary shoe into contact with the drum at point E. As the drum rotates counterclockwise, it drives the primary shoe downward, so that it again makes contact with the drum at point F. This further pushes the primary shoe, causing it to move into contact with the secondary shoe at point G., thus forcing the secondary shoe into the drum at point H. The revolving drum contacts the secondary shoe and drives it upward in contact again with the drum at point I. Since the forces involved are multiplied at each of the preceding steps, the final force developed at point I is very great. This force is applied to the lug (J) which is an integral part of the clutch cam disk, thus the disk and drum rotate together. The cam disk is keyed to the cam sleeve assembly and the clutch drum is connected to the drive shaft. When the clutch is disengaged, the drive shaft is free to turn on the inside of the clutch sleeve. (See figure 2-48.)

(*d*) TAPE SENSING MECHANISM.—The transfer of the code combination from the perforated tape to the contact levers which control the transmitting contacts is accomplished by means of the selector lever bail, the selector lever bail cam, selector lever pins, and selector levers. The sequence of operation occurs as follows:

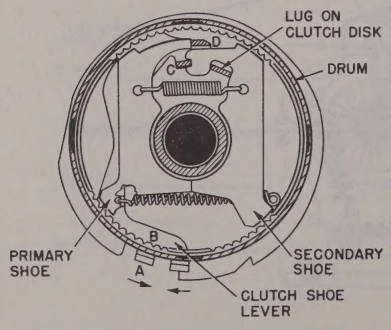

Figure 2—48. Clutch Disengaged

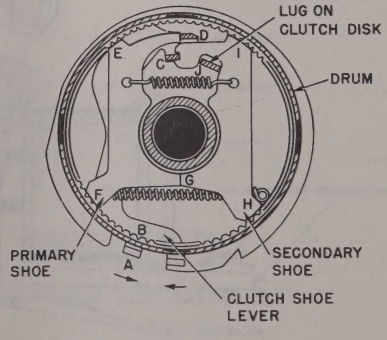

Figure 2—49. Clutch Engaged

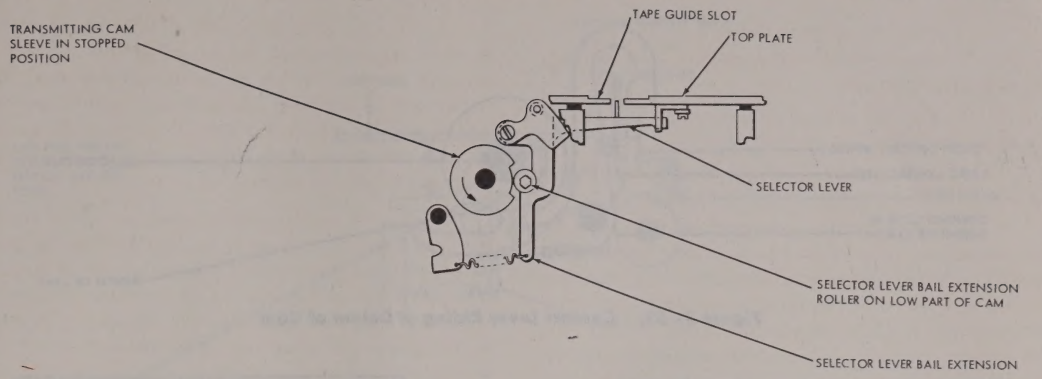
TRANSMITTING CAM SLEEVE IN STOPPED POSITION
TAPE GUIDE SLOT
TOP PLATE
SELECTOR LEVER
SELECTOR LEVER BAIL EXTENSION ROLLER ON LOW PART OF CAM
SELECTOR LEVER BAIL EXTENSION

Figure 2–50. Selector Lever Bail and Roller

1. The start-stop contacts open to produce the start interval (spacing) on the line. These points then remain open during the transmission of the code. After the code is transmitted, the start-stop contact closes and produces a stop interval (marking) on the signal line.

2. As the cam sleeve rotates, the selector lever bail extension roller rides onto the high side of its cam, actuating the selector lever bail (see figure 2-50). The selector levers are now free to respond to the tension exerted on them by their springs. The selector levers rotate and remove their pins upward through an opening in the top plate to sense the perforated tape. The selector lever pins which encounter holes in the tape advance through the tape; the pins which do not encounter perforated holes in the tape are blocked and prevented from advancing further.

3. All the selector levers act simultaneously and take the position predetermined by the perforations in the tape. However, the marking and spacing conditions are applied to the signal line in sequence, due to the arrangement of the cams on the cam sleeve.

4. There are five contact levers, each riding a cam on the cam sleeve (see figures 2-51 and 2-52). As each lever drops into the indent of the cam, its respective contact points close. The cam indents are positioned so that the No. 1 contact points close and open first, then the No. 2, etc., close and open until all five have closed and opened in sequence during one revolution of the cam sleeve. When the contact points close, a marking condition is put on the signal line.

5. The position of the selector lever determines whether or not the contact lever is blocked or permitted to ride into the indent of its cam. If a selector lever pin passes through a perforation in the tape, the selector lever moves out of the path to be taken by the end of the contact lever and permits the contact lever to rotate when it rides in and out of the indent in its cam (see figure 2-51). If a selector lever pin is blocked by the tape, the selector lever blocks the contact lever and prevents its movement (see figure 2-53). The transmitting contact will then remain open and a spacing condition is created on the signal line.

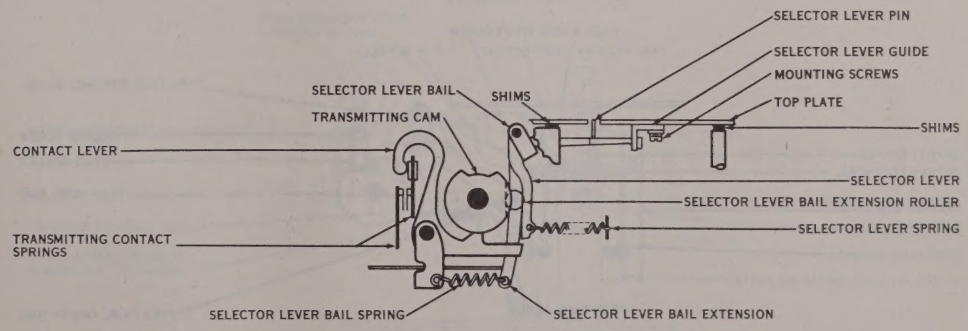

Figure 2–51. Selector Lever in the Marking Position

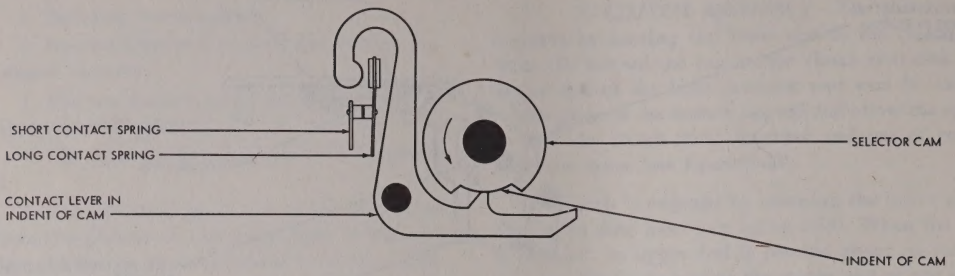

Figure 2–52. Contact Lever Riding in Detent of Cam

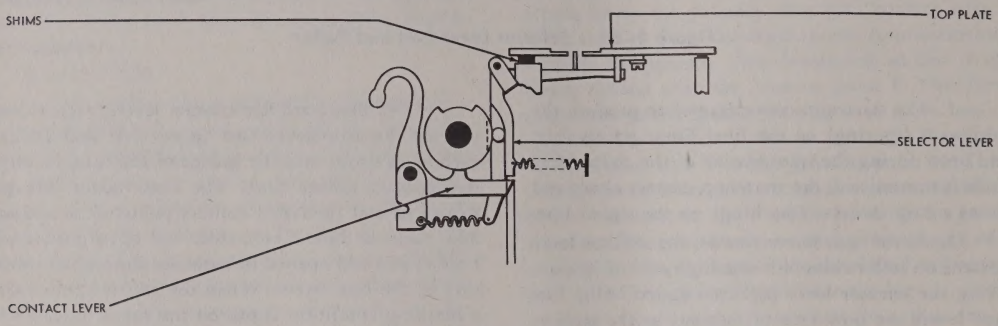

Figure 2–53. Selector Lever in the Spacing Position

6. As the tape is advanced through the transmitter, each perforated character is positioned over the selector lever pins and the above cycle recurs.

7. After the fifth code interval has been applied to the circuit, the selector lever bail extension roller drops into the indent of its cam and raises the selector lever bail to retract all of the selector levers from their sensing position.

(*e*) TAPE FEEDING.—Immediately after the selector lever bail has retracted all the selector lever pins from the tape, the feed roller moves down the low part of its cam (see figures 2-54, 2-55 and 2-56). This motion is passed on to the tape feed ratchet wheel by means of the feed pawl lever and feed pawl. The feed wheel, which is an integral part of the ratchet shaft, has pins on its periphery which engage the feed holes in the tape. As the tape feed ratchet wheel is advanced, the feed wheel positions the perforated characters in the tape over the selector lever pins. An eccentric on the tape feed ratchet detent provides adjustment

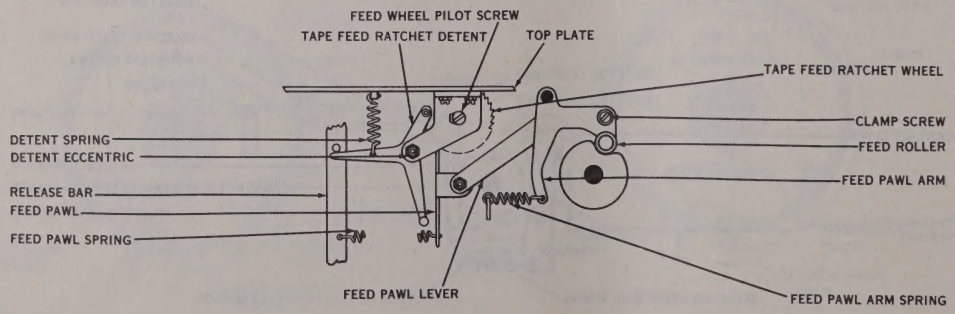

Figure 2–54. Feed Roller on High Side of Cam

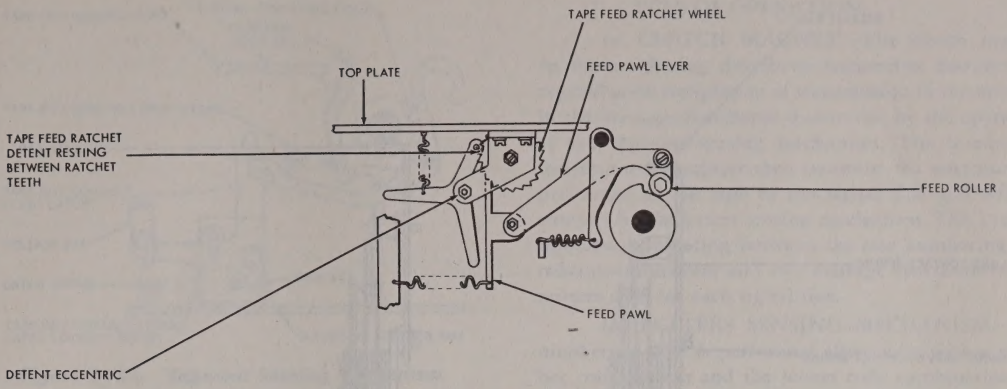

Figure 2–55. Tape Feed Ratchet Advancing

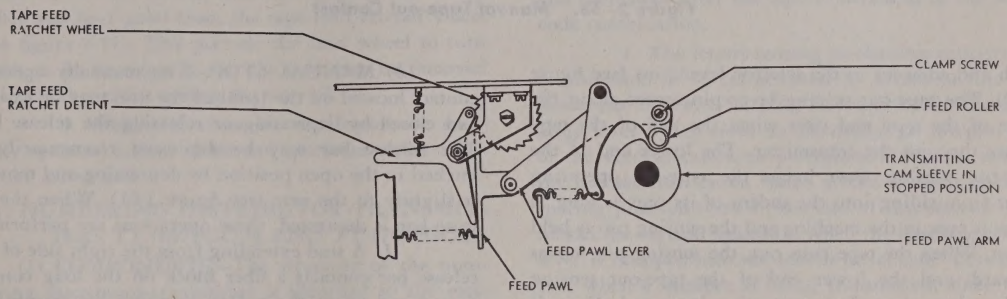

Figure 2–56. Tape Feed Ratchet in Advanced Position

for perfect alignment between the perforations in the tape and the selector lever pins (see figure 2-51).

(*f*) STOP MECHANISM.—The clutch magnet circuit can be interrupted in either of two ways. The clutch magnet windings are connected in series with an automatically operated tape out contact (see figure 2-57) and a manually operated contact (see figure 2-58). When either contact is opened, operation of the unit will stop.

(*g*) AUTOMATIC STOP.—The operation of the automatic tape-out stop is the same as that of the selector levers. The tape-out sensing lever pin is in line

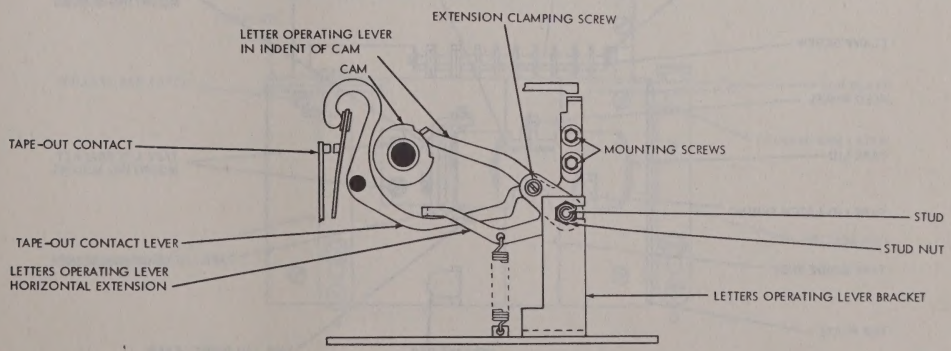

Figure 2–57. Automatic Tape-out Contact

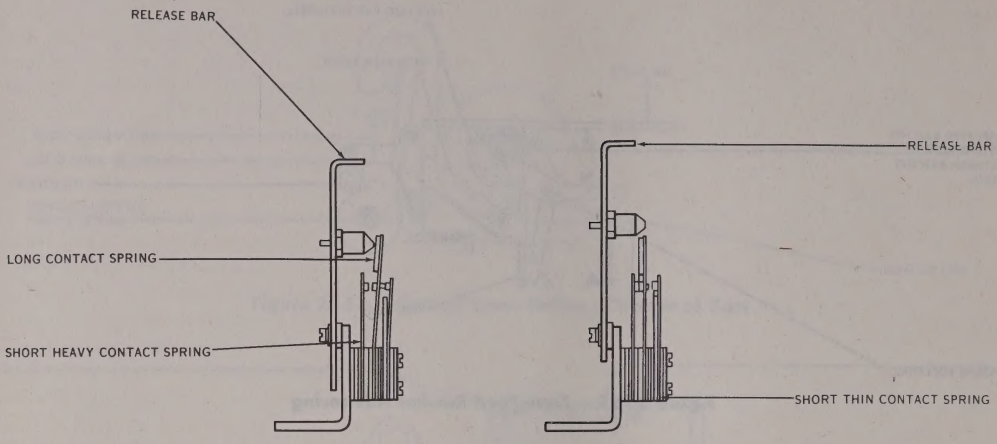

Figure 2—58. Manual Tape-out Contact

with and adjacent to the selector lever pins (see figure 2-59). The tape-out sensing lever pin senses along the edge of the tape and rises when the end of the tape passes through the transmitter. The lower end of the tape-out sensing lever keeps the tape-out operating lever from riding into the indent of its cam as long as there is tape in the machine and the sensing pin is held down. When the tape runs out, the sensing pin moves upward, and the lower end of the tape-out sensing lever swings clear of the operating lever and allows it to drop into the indent of its cam (see figure 2-60). This actuates the tape-out contact lever so that one end of this lever opens the contact points while the other end of this lever becomes latched by the tape-out contact lever latch (see figure 2-60). The opening of the tape-out contact breaks the circuit of the clutch magnet and stops the unit.

(*b*) MANUAL STOP.—The manually operated contact located on the front of the unit may be opened and closed by depressing or releasing the release bar. The release bar may be depressed momentarily or latched in the open position by depressing and moving it slightly to the rear (see figure 2-61). When the release bar is depressed, three operations are performed.

1. A stud extending from the right side of the release bar contacts a fiber block on the long contact spring and opens the points, stopping the transmitter (see figure 2-58).

2. A stud extending from the lower left-hand side of the release bar actuates the tape-out contact lever latch, permitting the tape-out contacts to close (see figure 2-60).

3. A stud extending from the upper left-hand side of the release bar (see figure 2-58) actuates the

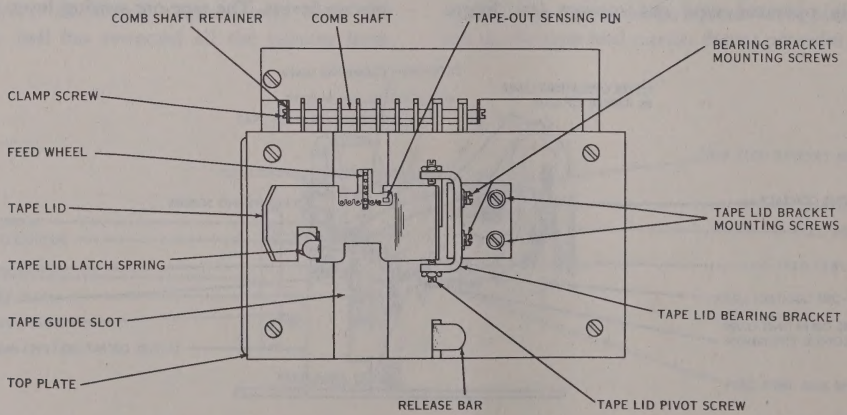

Figure 2—59. Tape-out Sensing Lever Pin

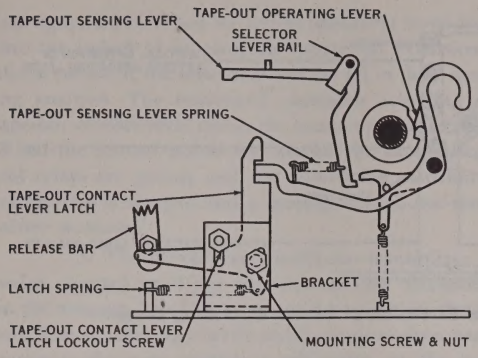

Figure 2–60. Tape-out Sensing Mechanism

tape-feed ratchet detent, thus disengaging the detent roller and feed pawl from the tape-feed ratchet wheel (see figure 2-54). This permits the feed wheel to turn freely in its bearings so that the tape may be removed or inserted without raising the tape lid.

4. When the release bar is released, the manually operated contact closes and operation of the transmitter is resumed.

f. NUMBERING DISTRIBUTOR-TRANSMITTERS TT-169/FGC-38 AND TT-170/FGC-39.

(1) COMPONENTS.—The structure of the numbering distributor-transmitter is identical to the message distributor-transmitter, except for the addition of a letters sensing mechanism. The letters sensing mechanism consists of a combination of levers. These levers are actuated by a cam when the letters code combination (five perforations in the tape) is sensed in the numbering tape. The sensing mechanism operates a contact which is connected to external control relays. The relays stop the numbering distributor-transmitter and start the message distributor-transmitter.

(2) CYCLE OF OPERATION.

(*a*) CLUTCH MAGNET.—The clutch magnet on the numbering distributor-transmitter becomes energized upon completion of transmission of the message in the message distributor-transmitter by the operation of the tape-out sensing mechanism. The numbering distributor-transmitter then transmits the next number perforated in the tape to the signal line and will be stopped by the letters sensing mechanism. This cycle is repeated, alternating between the one numbering distributor-transmitter and two message distributor-transmitters used for each signal line.

(*b*) LETTERS SENSING MECHANISM.—The numbering tape is perforated alternately with a number combination and the letters code combination. As the tape feeds through the numbering distributor-transmitter, the unit transmits a number to the line and then stops after the tape is advanced to the letters code combination.

1. The letters sensing mechanism consists of a combination of levers actuated by a cam on the cam sleeve (see figures 2-56, 2-62, 2-63, and 2-64). The operating lever which rides on the cam is an integral part of the vertical extension positioned along the ends of the five selector levers. When a selector lever is in the spacing position (down), the end of this selector lever blocks the vertical extension when the letters operating lever is dropped into the indent of its cam. This is the case when a number is being transmitted, since there are no number combinations where the selector levers are all in their marking position. After the number has been transmitted and the tape advanced to the letters code combination, all the selector levers are up in their mark position. The upper extension is then free to move when the operating lever is dropped into the indent in its cam (see figure 2-64).

2. A horizontal extension clamped to the letters operating lever rides over the tape-out contact lever

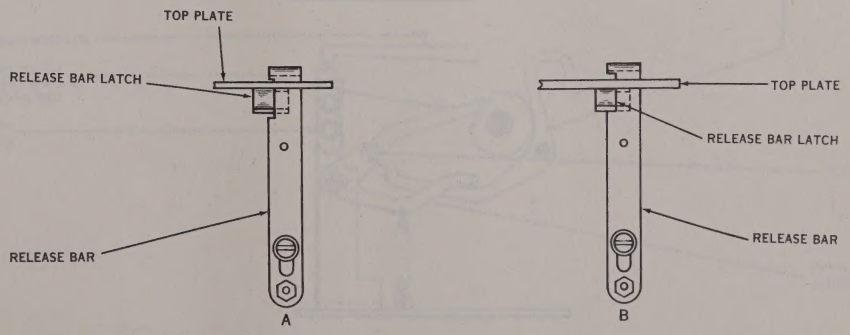

Figure 2–61. Release Bar in Latched and Unlatched Position

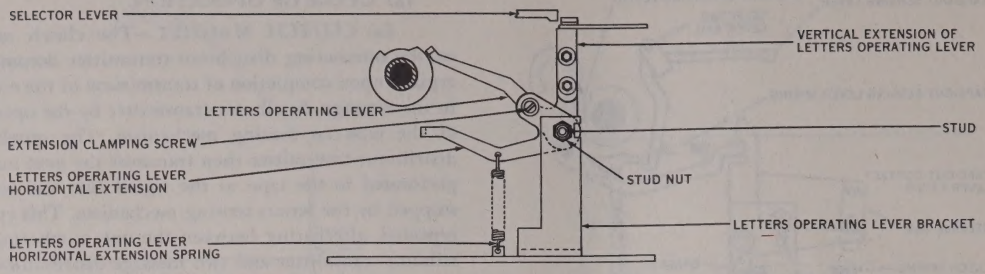

Figure 2–62. Selector Levers Blocking Vertical Extension of Letters Operating Lever

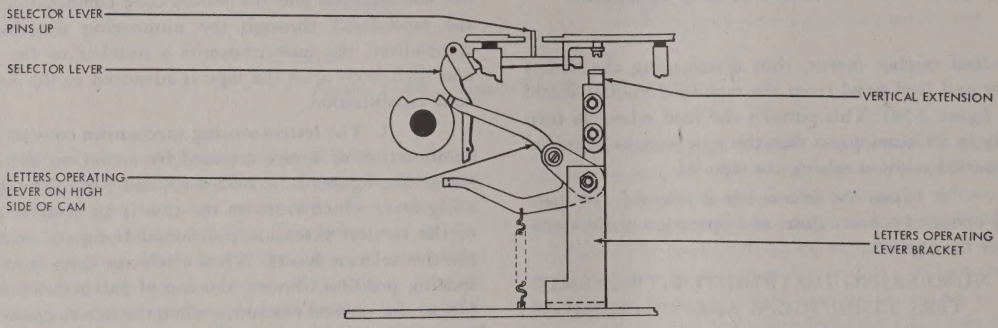
SELECTOR LEVER PINS UP
SELECTOR LEVER
VERTICAL EXTENSION
LETTERS OPERATING LEVER ON HIGH SIDE OF CAM
LETTERS OPERATING LEVER BRACKET

Figure 2–63. Letters Operating Lever on High Side of Cam

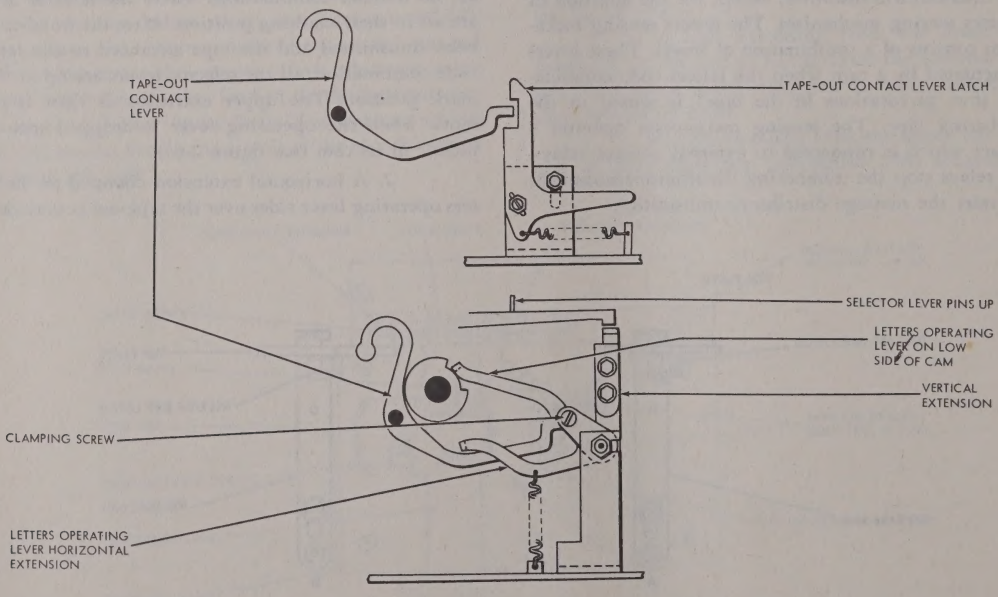
TAPE-OUT CONTACT LEVER
TAPE-OUT CONTACT LEVER LATCH
SELECTOR LEVER PINS UP
LETTERS OPERATING LEVER ON LOW SIDE OF CAM
VERTICAL EXTENSION
CLAMPING SCREW
LETTERS OPERATING LEVER HORIZONTAL EXTENSION

Figure 2–64. Letters Operating Lever on Low Side of Cam

(see figure 2-64). When the letters operating lever drops into the indent of its cam, the horizontal extension is also actuated, if the selector levers are all in their marking position. The horizontal extension actuating the tape-out contact lever causes the contact points to open. When the contact points are opened, the external control relays are pulsed, and the numbering distributor-transmitter is stopped and a message distributor-transmitter is started.

3. The numbering distributor-transmitter remains stopped until the tape-out sensing mechanism on the message distributor-transmitter energizes the circuit. The numbering distributor-transmitter then starts, transmits the next number combination on the tape, and stops again when the letters combination is sensed by the letters sensing mechanism. This cycle is repeated as long as the units are in operation.

g. MOUNTING BASES MT-1369/FGC-38, MT-1370/FGC-38X, AND MT-1371/FGC-39. The numbering distributor-transmitters are equipped with tape winding devices which take up and rewind the numbering tapes. One set of tape reels is located on the front cover of the unit and is used for storing the tape in preparation for transmission. A crank handle is provided on each of these reels to facilitate loading the numbering tape. A set of take-up reels is located on top of the unit. This set of reels is mounted on a shaft which is driven from the base countershaft by means of a feed arm and ratchet assembly. The upper end of the feed arm pivots on the tape reel shaft. A slot in the lower end of the feed arm mounts over an off-center stud on the end collar of the countershaft. Rotation of the end collar applies an oscillating motion to the lower end of the feed arm. A feed pawl, attached to the upper end of the feed arm, rotates the ratchet wheel and the tape reel shaft. Turning of the tape reel shaft applies a continuous friction to each tape reel through its clutch. As tape is fed from the tape feeding mechanism of the transmitter, the take-up reels turn with the shaft and wind up the tape.

A tape snubber assembly is provided on the distributor-transmitter assembly for each tape reel to keep the tape taut and to direct it onto the reel. A tight tape arm and ratchet assembly is also provided for each reel. The ratchet wheel is attached to the left side (front view) of each take-up reel. The tight tape arm, with a check pawl attached, pivots at the tape reel shaft and extends forward to the tape. When a tape becomes tight, the tight tape arm lifts and causes the check pawl to go into engagement with its ratchet wheel, thus applying a positive stoppage to the tape reel. This positive stop removes the torque applied to the tape reel through the clutch. When more tape is fed, slack in the tape permits the tight tape arm to move downward and release the check pawl. The tape reel then rotates due to the friction applied through the clutch. As the tape becomes tight again, this procedure is repeated and the reel is stopped.

INSTRUCTION BOOK

for

TELETYPEWRITER SETS AN/FGC-38, AN/FGC-38X, and AN/FGC-39

SECTION 3

INSTALLATION

TABLE OF CONTENTS

Paragraph		Page
1.	Unpacking	3-0
a.	General	3-0
b.	Unpacking	3-0
2.	Installation, Teletypewriter Sets, AN/FGC-38, AN/FGC-38X, and AN/FGC-39	3-0
a.	General	3-0
b.	Cabinet Installation	3-3
c.	Power and Signal Line Connections	3-5
	(1) Power Connections	3-5
	(2) Signal Line Connections	3-6
d.	Strapping Arrangements	3-10
e.	Assembling and Connecting the Equipment	3-12
	(1) Receiver Group OA-615/FGC-38, OA-619/FGC-38X, or OA-622/FGC-39	3-12
	(2) Transmitter Group OA-615/FGC-38, OA-618/FGC-38X, or OA-621/FGC-39	3-13
	(3) Monitor Group OA-617/FGC-38, OA-620/FGC-38X, or OA-623/FGC-39	3-16
f.	Speed Conversion-Teletypewriter Sets AN/FGC-38, AN/FGC-38X, and AN/FGC-39	3-17
3.	Initial Adjustments	3-20
a.	Receiver Group OA-616/FGC-38, OA-619/FGC-38X, or OA-622/FGC-39	3-20
	(1) Adjusting the Tape Path through the Reperforators	3-20
	(2) Manual Tape Feed-out Button Adjustment	3-20
	(3) Tape-out Contact Adjustment	3-21
	(4) Polar-Neutral Switch	3-21
	(5) Length of Tape Feed Out	3-21
b.	Transmitter Group OA-615/FGC-38, OA-618/FGC-38X, or OA-621/FGC-39	3-21
c.	Monitor Group OA-617/FGC-38, OA-620/FGC-38X, or OA-623/FGC-39	3-22
	(1) Adjusting the Tape Path	3-22
	(2) Adjusting the Tape-out Alarm Switch	3-22
	(3) Reset Time Stamp	3-22
d.	Testing	3-22
4.	Auxiliary Equipment	3-25

LIST OF ILLUSTRATIONS

Figure	Title	Page
3-1	Primary Power Distribution Diagram	3-1
3-2	Teletypewriter Set AN/FGC-38, AN/FGC-38X, or AN/FGC-39, Installation Arrangement	3-2
3-3	Teletypewriter Set AN/FGC-38, AN/FGC-38X, or AN/FGC-39, Office Layout Plan	3-3
3-4	Receiver and Monitor Cabinet, Floor Plan	3-4
3-5	Receiver, Monitor, and Transmitter Group, Wireways	3-4
3-6	Transmitter Cabinet, Floor Plan	3-4
3-7	Over-all System Cabling Diagram	3-5
3-8	KEY Group Jack Frame and Terminal Blocks	3-7
3-9	Connections for Long Message Facilities	3-9
3-10	Mounting a Reperforator	3-12
3-11	Receiver Group OA-616/FGC-38, OA-619/FGC-38X, or OR-622/FGC-39, Left and Right Side Wireway	3-14
3-12	Receiver Cabinet CY-1523/FGC, Shelf Arrangement for Front Accessibility	3-15
3-13	Transmitter Group OA-615/FGC-38, OA-618/FGC-38X, or OA-621/FGC-39, Wireway, Plug-in Locations	3-16

LIST OF ILLUSTRATIONS—(Cont'd)

Figure	Title	Page
3–14	Monitor Group OA-617/FGC-38, OA-620/FGC-38X, or OA-623/FGC-39, Wireway, Plug-in Locations	3–17
3–15	Change Required in Main Shaft for 100 WPM (Experimental) Operation	3–19
3–16	Motor Pinion Change for 100 WPM (Experimental) Operation	3–19
3–17	Parts Required for Changing Selector Mechanism to 100 WPM (Experimental) Operation	3–19
3–18	Parts Required for Changing Range Scale Assembly to 100 WPM (Experimental) Operation	3–19
3–19	Parts Required for Changing Main Bail to 100 WPM (Experimental) Operation	3–19
3–20	Adjusting the Tape Guides	3–21
3–21	KEY Group Jack Strips and Receiver Group Patching Jacks	3–23
3–22	External Connections to Distributor-Transmitter to Adapt it for Auxiliary Use with AN/FGC-38, AN/FGC-38X, or AN/FGC-39	3–24
3–23	Teletypewriter Set AN/FGC-38, AN/FGC-38X, or AN/FGC-39, Interconnecting Diagram	3–25

LIST OF TABLES

Table	Title	Page
3–1	Incoming Line Connections	3–6
3–2	Additional Incoming Line Connections	3–6
3–3	Outgoing Line Connections	3–8
3–4	Connection Removals for Manual Tape Feed Out	3–10
3–5	Connections for Open Line Alarm Lamp Elimination for Spare Position	3–10
3–6	Connections for Use of Synchronizing Pulse	3–10
3–7	Connection Changes to Eliminate Use of the Number-Delete Switch on Control Panel	3–10
3–8	Connection Changes to Remove Rerun Message Numbering	3–10
3–9	First Step to Supply Transmitting Line Current Remotely on One Line Only	3–11
3–10	First Step to Supply Transmitting Line Current Remotely for Two or Three Lines	3–11
3–11	Second Step to Supply Transmitting Line Current Remotely for One, Two, or Three Lines	3–11
3–12	Third Step to Supply Transmitting Line Current Remotely for One, Two, or Three Lines	3–11
3–13	First Step to Supply Receiving Line Current Locally	3–11
3–14	Second Step to Supply Receiving Line Current Locally	3–11
3–15	Connection Changes to Reduce Receiver Bias to 10 MA	3–12
3–16	Parts for Converting Typing Reperforators to 100 WPM (Experimental) Operation	3–18
3–17	Parts for Converting Multiple Transmitter Bases to 75 or 100 WPM (Experimental) Operation	3–20

SECTION 3
INSTALLATION

1. UNPACKING.

a. GENERAL.—Teletypewriter Sets AN/FGC-38, AN/FGC-38X, and AN/FGC-39 are packed complete in a total of 12 shipping boxes (see table 1-4). Within each box are the units listed below; all the necessary mounting hardware will be found in muslin bags which are attached to the appropriate unit. Care should be exercised to avoid misplacing or mixing up the hardware. The three longest boxes, numbered 1, 2, and 3, contain the cabinets. Boxes 4 and 5 contain one power supply each. Box 6 contains two message distributor-transmitter bases, three numbering distributor-transmitters, and six message distributor-transmitters. Box 7 contains one numbering distributor-transmitter base on which are to be mounted the three numbering distributor-transmitters from box 6. Boxes 8 and 9 contain two receiver reperforators each. Box 10 contains one monitor reperforator, one reeling machine, and one maintenance parts kit. Box 11 contains one monitor reperforator, one reeling machine, and one time stamp. Box 12 contains one monitor reperforator, one reeling machine, and two time stamps. (Teletypewriter Set AN/FGC-38X does not have the time stamps.) When unpacking the units, as described below, care should be exercised so as not to damage or mar the equipment. Unpack the boxes in their numerical order and keep the components of each cabinet near the appropriate cabinet to facilitate easy assembly. The transmitter cabinet (Electrical Equipment Cabinet CY-1524/FGC) accommodates three numbering distributor-transmitters, six message distributor-transmitters, one numbering distributor-transmitter base, two message distributor-transmitter bases, three control panels (SB-358/FGC), and one power supply (PP-987/U). The receiver cabinet (Electrical Equipment Cabinet CY-1523/FGC) accommodates four reperforators, one power supply (PP-987/U), and four control panels (SB-357/FGC). The monitor cabinet (Electrical Equipment Cabinet CY-1522/FGC) accommodates three reperforators, three reeling machines (RL-173/FGC), and three Time Stamps (MX-1527/U). (Teletypewriter Set AN/FGC-38X does not have time stamps.)

b. UNPACKING.

(1) Boxes, 1, 2, and 3 are packed in a similar manner. To unpack these boxes, cut the steel strapping from around the boxes, remove the cover panel, take out the cabinet, and set it upright. Take the tape off the Kraft wrapping paper and remove the paper. The cabinet accessory box is located in the bottom of the cabinet. The accessory box contains mounting hardware, tape container brackets, tape containers, tape guides, tape chute assemblies, and adapters.

(2) Boxes 4 and 5 contain the power supplies and are wrapped in the same way. Remove the steel strapping, the cover panel, and the wrapping paper as above. One power supply goes into the receiver cabinet and one power supply goes into the transmitter cabinet.

(3) Box 6 is unpacked as above. The individual message and numbering distributor-transmitters are packed separately in cardboard boxes in the wooden crate. After box 6 is unpacked, these individual boxes must be removed and unpacked separately. With each unit is a bag of hardware tied to the unit.

(4) Box 7 contains one numbering distributor-transmitter base only. Unpack this unit as in *b*(2) above.

(5) Boxes 8 and 9, containing the two reperforators, are wooden crates with each unit in an individual cardboard box. Unpack as in *b*(3) above.

(6) Boxes 10, 11, and 12 are packed as in *b*(3) and are unwrapped in the same manner.

2. INSTALLATION.

a. GENERAL.—A Teletypewriter Set AN/FGC-38, AN/FGC-38X, or AN/FGC-39 consists of a receiver, a transmitter, and a monitor group. An installation may consist of many sets. The receiver groups may be terminated in central distribution points, called KEY receiver groups. The transmitter groups may be terminated in central distribution points, called KEY transmitter groups. A maximum number of five groups plus a KEY group comprise an installation group. As many installation groups are used as are necessary for each particular installation.

Any receiver group or transmitter group may be converted into a KEY receiver group or KEY transmitter group by installing the jack strips and terminal boards on the interconnecting cables into the patching frame of the key receiver or key transmitter group of the installation group (see figure 3-3). The receiver, transmitter, and monitor groups may be arranged in three

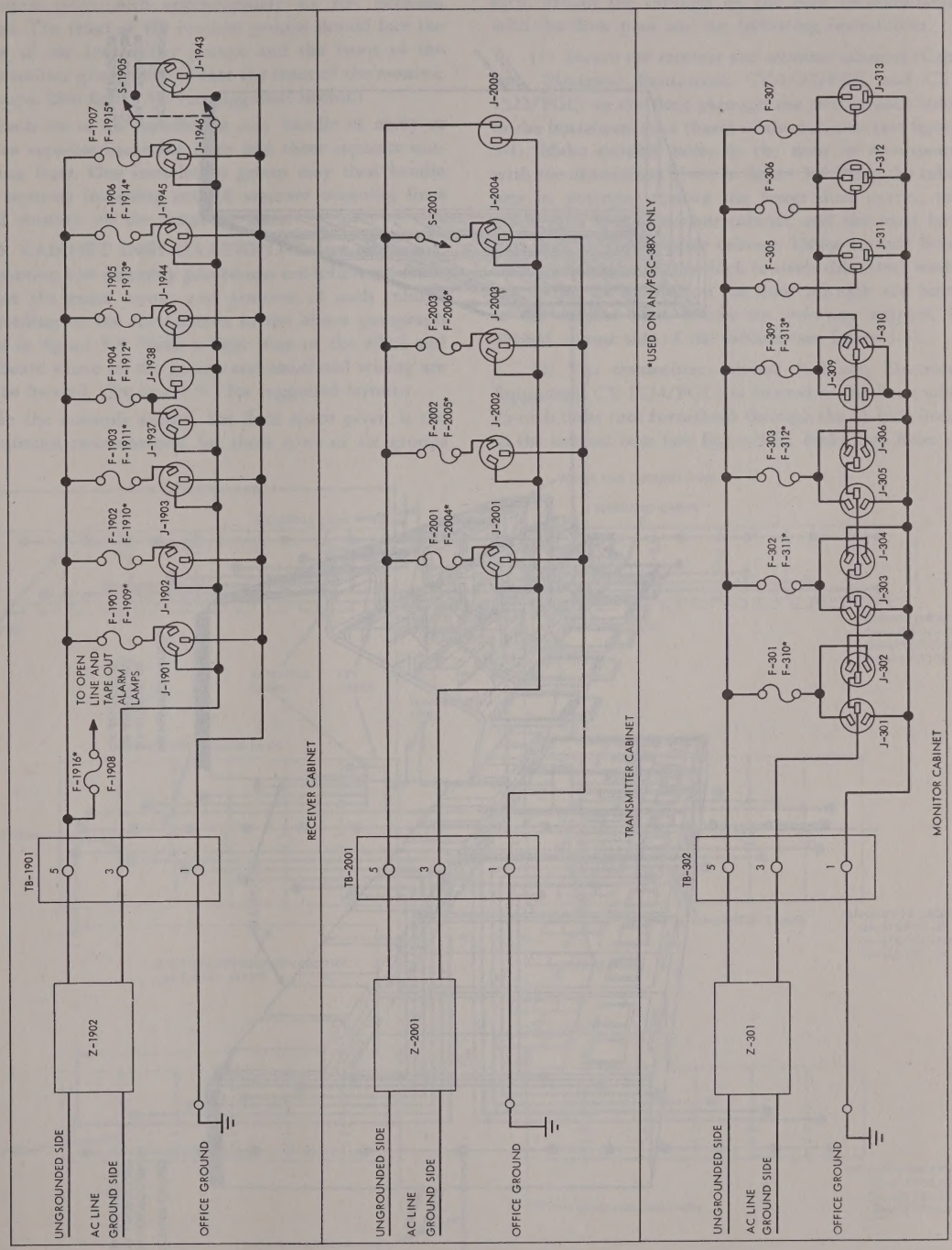

Figure 3—1. Primary Power Distribution Diagram

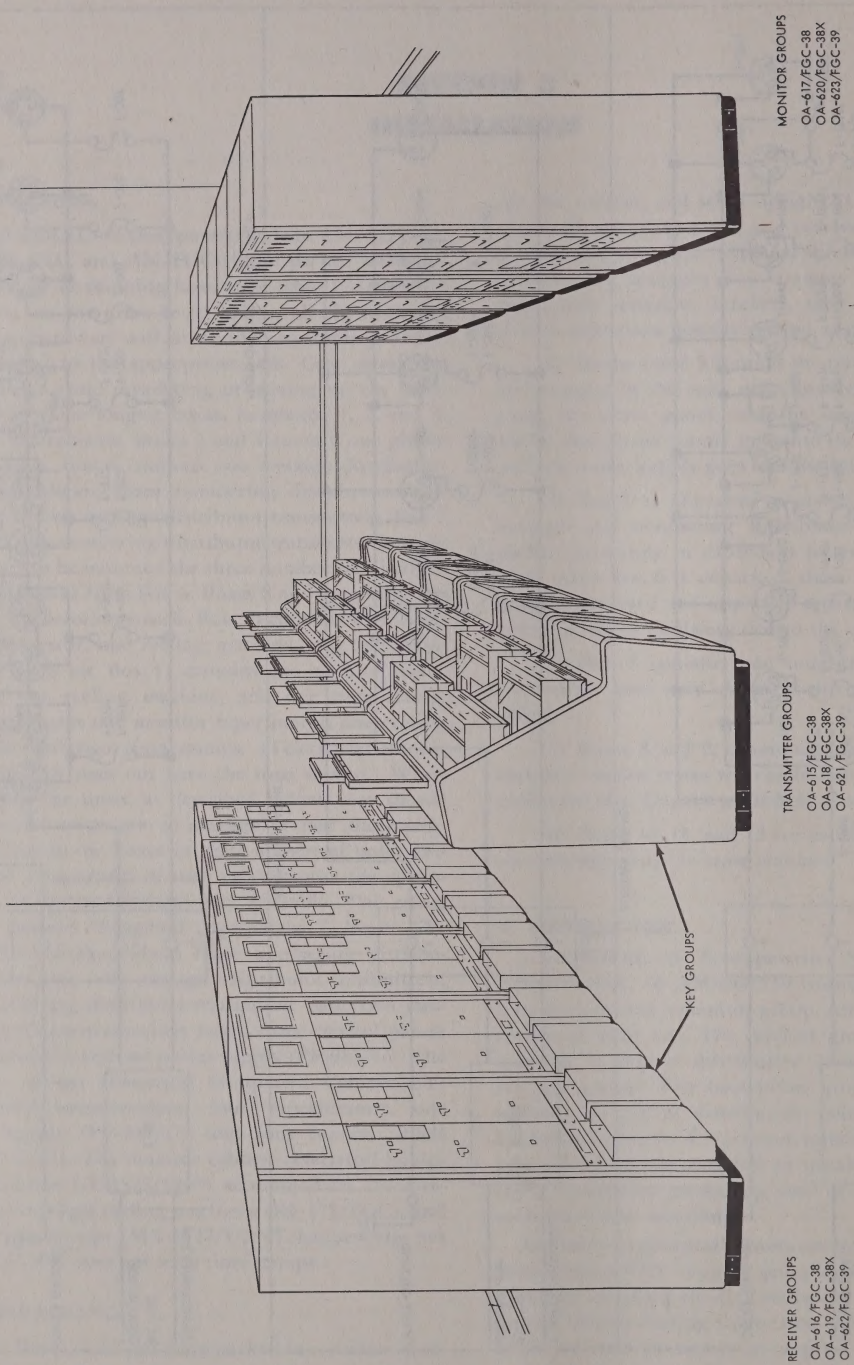

Figure 3—2 Teletypewriter Set AN/FGC-38, AN/FGC-38X, or AN/FGC-39, Installation Arrangement

separate rows, with approximately six feet between rows. The front of the receiver groups should face the rear of the transmitter groups and the front of the transmitter groups should face the front of the monitor groups. (See figure 3-2 for suggested layout.)

Each set in an installation may handle as many as three separate incoming lines and three separate outgoing lines. One installation group may then handle 18 separate incoming and 18 separate outgoing lines and monitor all the outgoing lines.

b. CABINET INSTALLATION.—Before any actual mounting and assembly procedures are followed, determine the exact layout and position of each cabinet according to the instructions in the above paragraph and in figure 3-3. Make a floor plan of the office and indicate where all the groups and associated wiring are to be located. (See figure 3-3 for suggested layout.)

In the example shown, the floor space given is the minimum recommended for three rows of six groups each. Mount the cabinets on the floor in accordance with the floor plan and the following instructions.

(1) Secure the receiver and monitor cabinets (Cabinet, Electrical Equipment CY-1523/FGC and CY-1522/FGC) to the floor through the two ½-inch holes in the horizontal duct (base) of the cabinets (see figure 3-4). Make suitable holes in the floor in accordance with the dimensions given in figure 3-4. Place the cabinets in position, remove the lower duct covers, the guide rails in the receiver cabinet, and the fixed bottom shelf in the monitor cabinet. Using ½-inch bolts (not furnished) with one-inch (outside diameter) washers, secure the cabinet to the floor through the holes in the cabinet base. Secure the wireway adapter, if needed, to one side of the cabinet (see figure 3-5).

(2) The transmitter cabinet (Cabinet, Electrical Equipment CY-1524/FGC) is secured to the floor with ½-inch bolts (not furnished) through the ½-inch holes in the cabinet base (see figure 3-6). Make two holes in

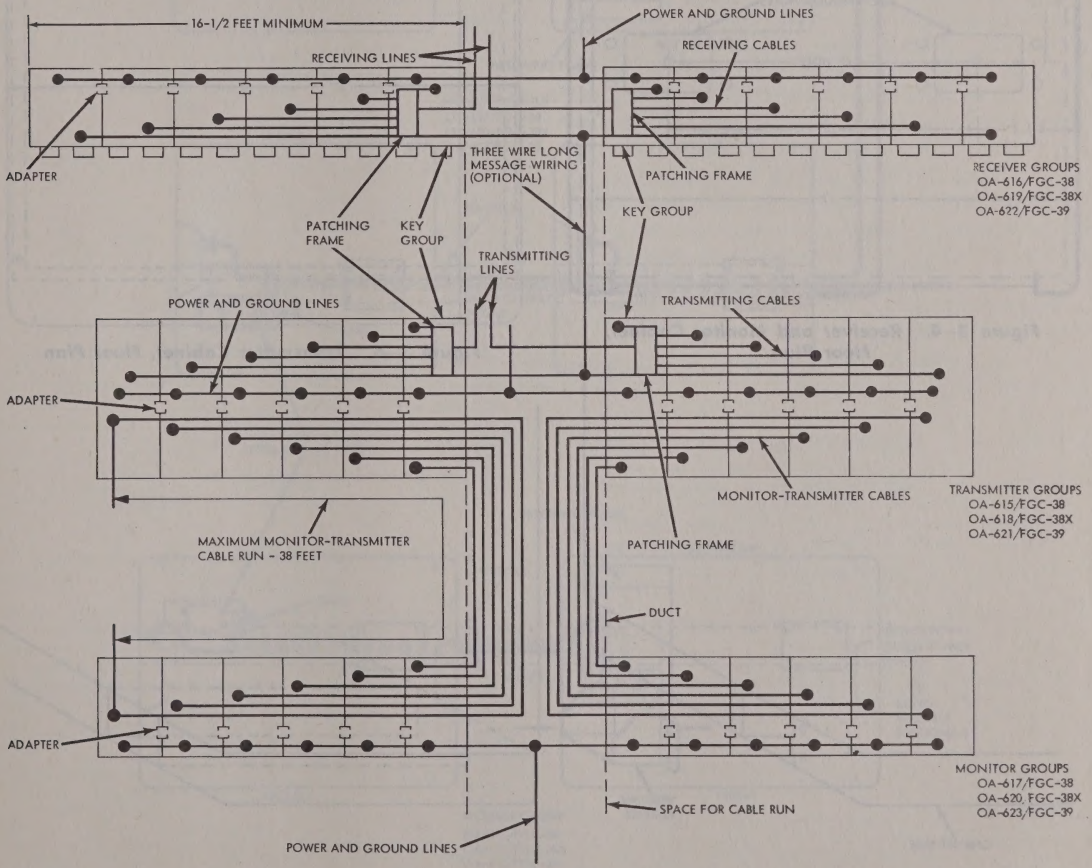

Figure 3—3. Teletypewriter Set AN/FGC-38, AN/FGC-38X, or AN/FGC-39, Office Layout Plan

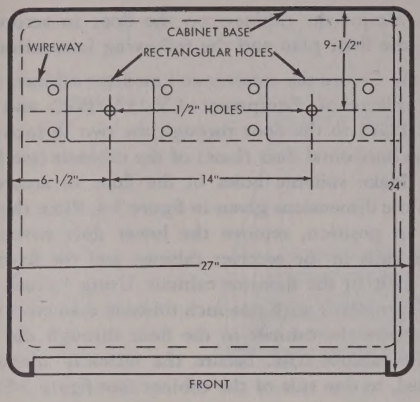

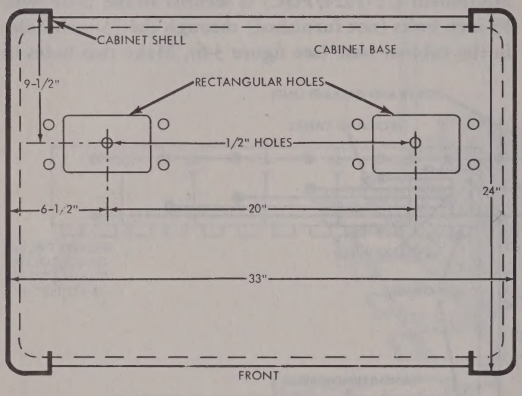

Figure 3–4. Receiver and Monitor Cabinet, Floor Plan

the floor in the proper position in accordance with the floor plan and the transmitter cabinet base drawing (see figures 3-3 and 3-6). Secure the cabinet to the floor using one-inch (outside diameter) washers between the cabinet and the bolt. Secure the wireway adapter, if needed, to one side of the cabinet (see figure 3-5).

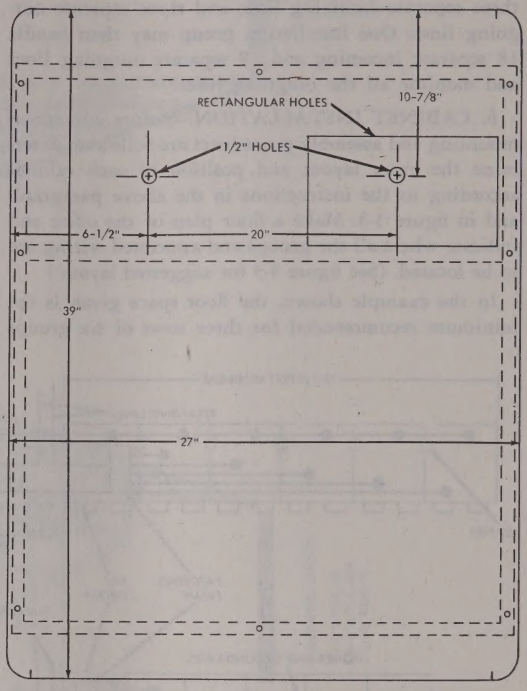

Figure 3–6. Transmitter Cabinet, Floor Plan

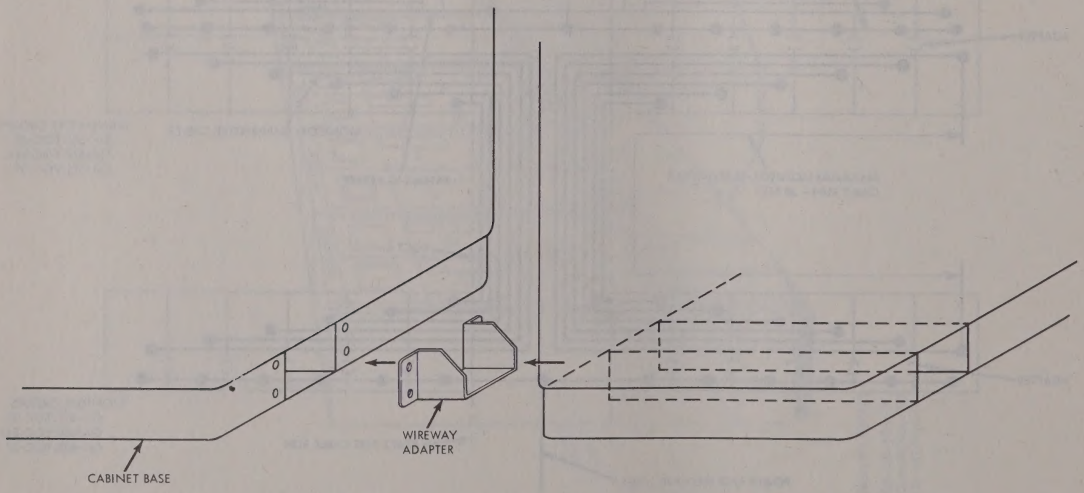

Figure 3–5. Receiver, Monitor, and Transmitter Group, Wireways

c. POWER AND SIGNAL LINE CONNECTIONS.

(1) POWER CONNECTIONS.—Bring into each cabinet 115-volt, single-phase, 60-cycle (50-60 cycle unregulated for AN/FGC-38X) and office ground lines. The power and ground lines are fed through the cable ducts in the bases of the cabinets and brought up into the individual cabinet through the floor opening nearest the electrical noise suppressor. The power lines must be connected to the electrical noise suppressor as noted on the filter can inside the suppressor or as noted on the actual wiring diagrams (see also figure 3-7). Grounded and ungrounded sides of the power lines are

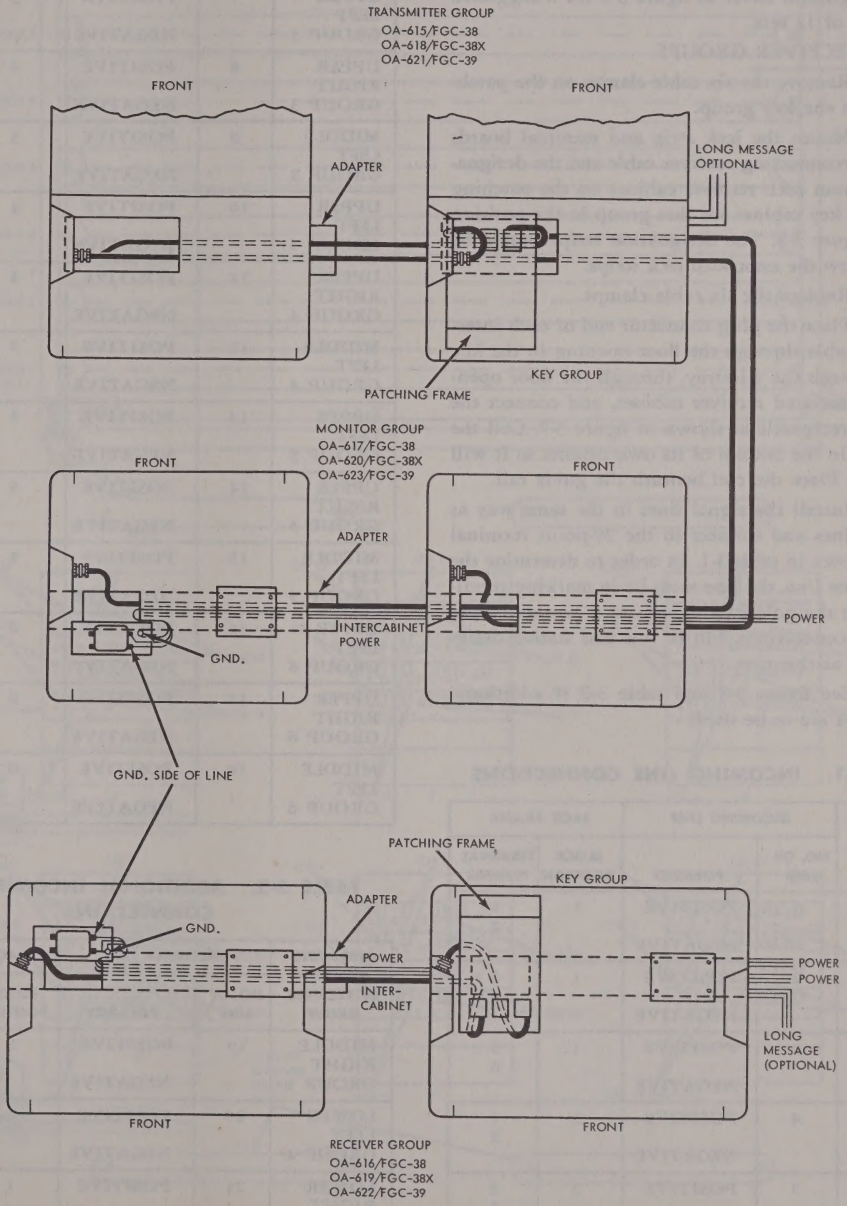

Figure 3–7. Over-all System Cabling Diagram

not interchangeable. Connect the office ground line to the suppressor mounting screw.

(2) SIGNAL LINE CONNECTIONS.—Determine which cabinets will be the key receiver and key transmitter groups (see figure 3-23). One key group is required for each group of not more than six receiver or transmitter groups. Refer to figure 3-3 for a suggested office layout of 12 sets.

(*a*) RECEIVER GROUPS.

1. Remove the six cable clamps on the patching frame in the key group.

2. Mount the jack strip and terminal boards on each interconnecting receiver cable and the designation strips from each receiver cabinet on the patching frame of the key cabinet for that group in the position shown in figure 3-8. The designation strips should be installed below the associated jack strips.

3. Replace the six cable clamps.

4. Place the plug connector end of each interconnecting cable through the floor opening in the key cabinet, through the wireway, through the floor opening of its associated receiver cabinet, and connect the plug to the receptacle as shown in figure 3-7. Coil the excess cable in the bottom of its own cabinet so it will not unwind. Place the coil beneath the guide rail.

5. Install the signal lines in the same way as the power lines and connect to the 20-point terminal boards as shown in table 3-1. In order to determine the polarity of the line, the line must be in marking condition. Be sure the polarity determined is correct before making the connections. Fill in line and station designation cards at this time.

6. See figure 3-8 and table 3-2 if additional line positions are to be used.

TABLE 3-1. INCOMING LINE CONNECTIONS

OPERATING POSITION IN RECEIVER GROUP	INCOMING LINE		JACK FRAME	
	NO. OF LINE	POLARITY	BLOCK POSITION	TERMINAL NUMBER
UPPER LEFT GROUP 1	1	POSITIVE NEGATIVE	1	1 2
UPPER RIGHT GROUP 1	2	POSITIVE NEGATIVE	1	3 4
MIDDLE LEFT GROUP 1	3	POSITIVE NEGATIVE	1	5 6
UPPER LEFT GROUP 2	4	POSITIVE NEGATIVE	2	1 2
UPPER RIGHT GROUP 2	5	POSITIVE NEGATIVE	2	3 4
MIDDLE LEFT GROUP 2	6	POSITIVE NEGATIVE	2	5 6
UPPER LEFT GROUP 3	7	POSITIVE NEGATIVE	3	1 2
UPPER RIGHT GROUP 3	8	POSITIVE NEGATIVE	3	3 4
MIDDLE LEFT GROUP 3	9	POSITIVE NEGATIVE	3	5 6
UPPER LEFT GROUP 4	10	POSITIVE NEGATIVE	4	1 2
UPPER RIGHT GROUP 4	11	POSITIVE NEGATIVE	4	3 4
MIDDLE LEFT GROUP 4	12	POSITIVE NEGATIVE	4	5 6
UPPER LEFT GROUP 5	13	POSITIVE NEGATIVE	5	1 2
UPPER RIGHT GROUP 5	14	POSITIVE NEGATIVE	5	3 4
MIDDLE LEFT GROUP 5	15	POSITIVE NEGATIVE	5	5 6
UPPER LEFT GROUP 6	16	POSITIVE NEGATIVE	6	1 2
UPPER RIGHT GROUP 6	17	POSITIVE NEGATIVE	6	3 4
MIDDLE LEFT GROUP 6	18	POSITIVE NEGATIVE	6	5 6

TABLE 3-2. ADDITIONAL INCOMING LINE CONNECTIONS

OPERATING POSITION IN RECEIVER GROUP	INCOMING LINE		JACK FRAME	
	NO. OF LINE	POLARITY	BLOCK POSITION	TERMINAL NUMBER
MIDDLE RIGHT GROUP 1	19	POSITIVE NEGATIVE	1	7 8
LOWER LEFT GROUP 1	20	POSITIVE NEGATIVE	1	9 10
LOWER RIGHT GROUP 1	21	POSITIVE NEGATIVE	1	11 12

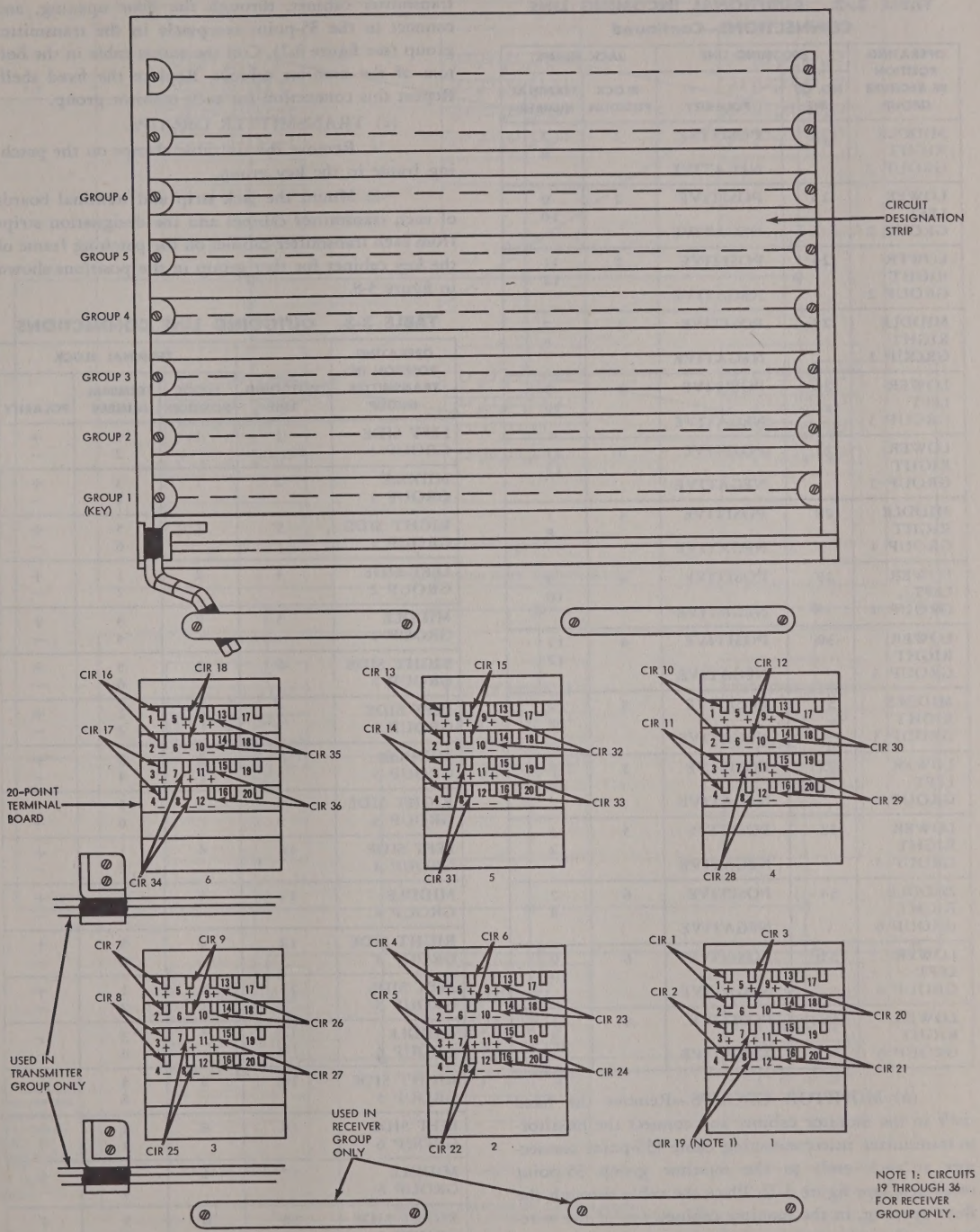

Figure 3—8. KEY Group Jack Frame and Terminal Blocks

TABLE 3.-2. ADDITIONAL INCOMING LINE CONNECTIONS—Continued

OPERATING POSITION IN RECEIVER GROUP	INCOMING LINE		JACK FRAME	
	NO. OF LINE	POLARITY	BLOCK POSITION	TERMINAL NUMBER
MIDDLE RIGHT GROUP 2	22	POSITIVE NEGATIVE	2	7 8
LOWER LEFT GROUP 2	23	POSITIVE NEGATIVE	2	9 10
LOWER RIGHT GROUP 2	24	POSITIVE NEGATIVE	2	11 12
MIDDLE RIGHT GROUP 3	25	POSITIVE NEGATIVE	3	7 8
LOWER LEFT GROUP 3	26	POSITIVE NEGATIVE	3	9 10
LOWER RIGHT GROUP 3	27	POSITIVE NEGATIVE	3	11 12
MIDDLE RIGHT GROUP 4	28	POSITIVE NEGATIVE	4	7 8
LOWER LEFT GROUP 4	29	POSITIVE NEGATIVE	4	9 10
LOWER RIGHT GROUP 4	30	POSITIVE NEGATIVE	4	11 12
MIDDLE RIGHT GROUP 5	31	POSITIVE NEGATIVE	5	7 8
LOWER LEFT GROUP 5	32	POSITIVE NEGATIVE	5	9 10
LOWER RIGHT GROUP 5	33	POSITIVE NEGATIVE	5	11 12
MIDDLE RIGHT GROUP 6	34	POSITIVE NEGATIVE	6	7 8
LOWER LEFT GROUP 6	35	POSITIVE NEGATIVE	6	9 10
LOWER RIGHT GROUP 6	36	POSITIVE NEGATIVE	6	11 12

(*b*) MONITOR GROUPS.—Remove the fixed shelf in the monitor cabinet and connect the monitor-to-transmitter interconnecting cable (35-point connectors at each end) to the monitor group 35-point receptacle (see figure 3-7). Place the cable through the floor opening, in the monitor cabinet, out of the wireway in the cabinet base, and to the associated transmitter group. Place the cable in the wireway, in the transmitter cabinet, through the floor opening, and connect to the 35-point receptacle in the transmitter group (see figure 3-7). Coil the excess cable in the bottom of the monitor cabinet. Replace the fixed shelf. Repeat this connection for each monitor group.

(*c*) TRANSMITTER GROUPS.

1. Remove the six cable clamps on the patching frame in the key group.

2. Mount the jack strip and terminal boards of each transmitter cabinet and the designation strips from each transmitter cabinet on the patching frame of the key cabinet for that group in the positions shown in figure 3-8.

TABLE 3-3. OUTGOING LINE CONNECTIONS

OPERATING POSITION IN TRANSMITTER GROUP	OUTGOING LINE	TERMINAL BLOCK		
		BLOCK POSITION	TERMINAL NUMBER	POLARITY
LEFT SIDE GROUP 1	1	1	1 2	+ –
MIDDLE GROUP 1	2	1	3 4	+ –
RIGHT SIDE GROUP 1	3	1	5 6	+ –
LEFT SIDE GROUP 2	4	2	1 2	+ –
MIDDLE GROUP 2	5	2	3 4	+ –
RIGHT SIDE GROUP 2	6	2	5 6	+ –
LEFT SIDE GROUP 3	7	3	1 2	+ –
MIDDLE GROUP 3	8	3	3 4	+ –
RIGHT SIDE GROUP 3	9	3	5 6	+ –
LEFT SIDE GROUP 4	10	4	1 2	+ –
MIDDLE GROUP 4	11	4	3 4	+ –
RIGHT SIDE GROUP 4	12	4	5 6	+ –
LEFT SIDE GROUP 5	13	5	1 2	+ –
MIDDLE GROUP 5	14	5	3 4	+ –
RIGHT SIDE GROUP 5	15	5	5 6	+ –
LEFT SIDE GROUP 6	16	6	1 2	+ –
MIDDLE GROUP 6	17	6	3 4	+ –
RIGHT SIDE GROUP 6	18	6	5 6	+ –

NOTE: The positive side of the line is grounded.

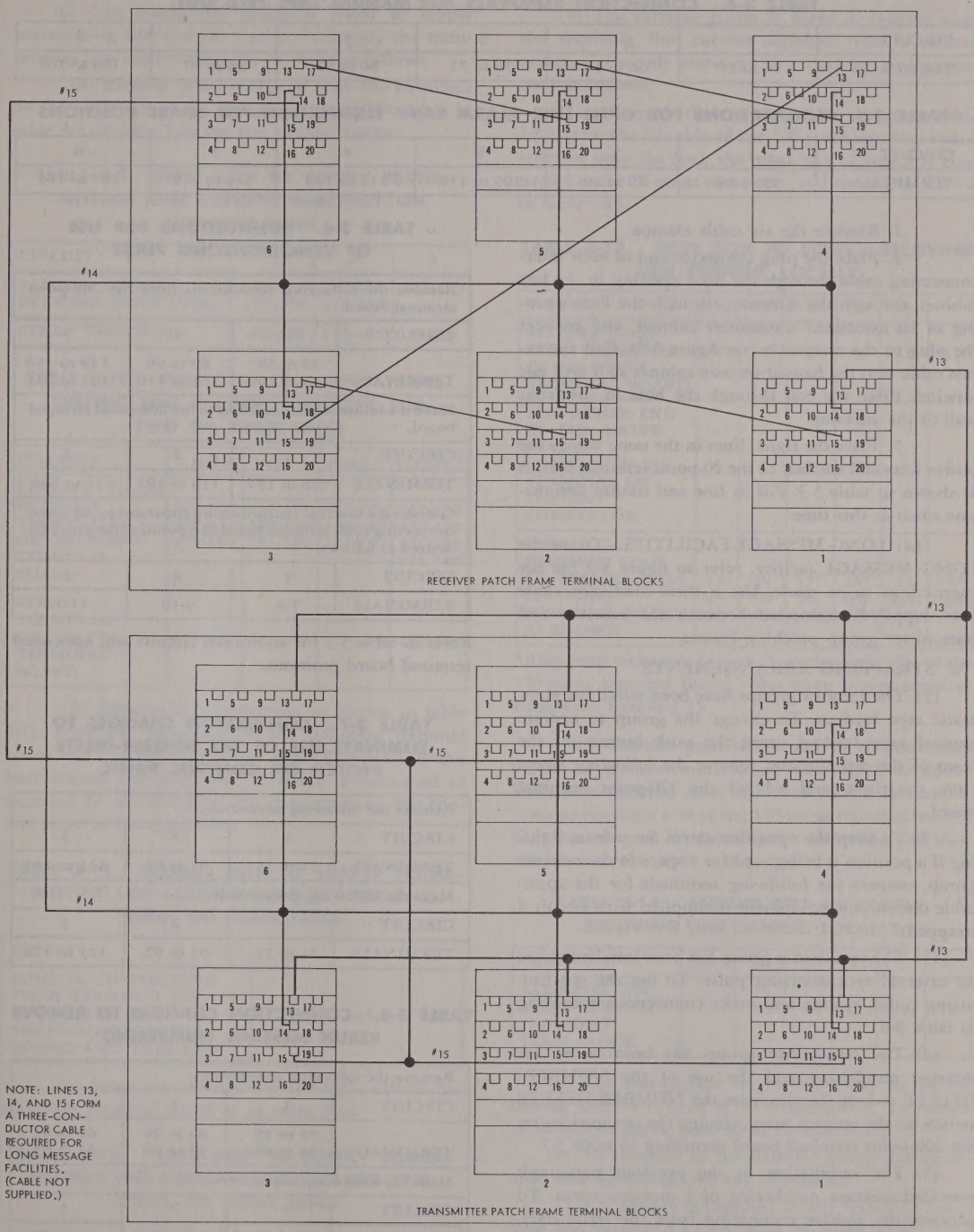
#15
#14
#13
RECEIVER PATCH FRAME TERMINAL BLOCKS
TRANSMITTER PATCH FRAME TERMINAL BLOCKS
NOTE: LINES 13, 14, AND 15 FORM A THREE-CONDUCTOR CABLE REQUIRED FOR LONG MESSAGE FACILITIES. (CABLE NOT SUPPLIED.)

Figure 3–9. Connections for Long Message Facilities

TABLE 3-4. CONNECTION REMOVALS FOR MANUAL TAPE FEED OUT

CIRCUIT	1	2	3	4	5	6
TERMINALS	56 to 57	66 to 67	76 to 77	86 to 87	96 to 97	106 to 107

TABLE 3-5. CONNECTIONS FOR OPEN LINE ALARM LAMP ELIMINATION FOR SPARE POSITIONS

CIRCUIT	1	2	3	4	5	6
TERMINALS	23 to 24	29 to 30	109 to 110	111 to 112	113 to 114	115 to 116

3. Replace the six cable clamps.

4. Place the plug connector end of each interconnecting cable through the floor opening in the key cabinet, through the wireway, through the floor opening of its associated transmitter cabinet, and connect the plug to the receptacle (see figure 3-7). Coil the excess cable into the base of its own cabinet so it will not unwind. Place the coil through the hole in the front wall of the wireway.

5. Place the signal lines in the same way as the power lines and connect to the 20-point terminal boards as shown in table 3-3. Fill in line and station designation cards at this time.

(*d*) LONG MESSAGE FACILITIES.—To use the LONG MESSAGE facility, refer to figure 3-9 for the connections to be made. Use a three-conductor cable (not supplied) connected between the receiver and transmitter group patching frames.

d. STRAPPING ARRANGEMENTS.

(1) The receiver groups have been wired for automatic tape feedout. To change the group to operate manual tape feedout using the push button on the front of the reperforator, remove the following straps from the right-hand side of the 120-point terminal board.

(2) To keep the open-line alarm lamp from lighting if a position is being used for a spare in the receiver group, connect the following terminals for the applicable circuit (the equipment is supplied with circuit 4 strapped).

(3) The transmitter group has been installed to use no external synchronizing pulse. To use the synchronizing pulse, change and make connections according to table 3-6.

(4) The transmitter group has been wired for message numbering and the use of the NUMBER-DELETE switch. To eliminate the NUMBER-DELETE switch on the control panel, change the connections on the 200-point terminal board according to table 3-7.

(5) The installation in the previous paragraph provided message numbering of a monitor rerun. To permanently remove numbering from the rerun only, change the connections on the 200-point terminal board according to table 3-8.

TABLE 3-6. CONNECTIONS FOR USE OF SYNCHRONIZING PULSE

Remove the following connections from the 200-point terminal board.			
CIRCUIT	1	2	3
TERMINALS	29 to 30 100 to 108	89 to 90 101 to 110	149 to 150 102 to 111
Make the following connections to the 200-point terminal board.			
CIRCUIT	1	2	3
TERMINALS	108 to 184	110 to 185	11 to 186
Connect the external synchronizing apparatus to the interconnecting cable terminal board (20-point) of the group(s) desired as follows:			
CIRCUIT	1	2	3
TERMINALS	7-8	9-10	11-12

Refer to table 3-3 for additional circuits and associated terminal board positions.

TABLE 3-7. CONNECTION CHANGES TO ELIMINATE USE OF THE NUMBER-DELETE SWITCH ON CONTROL PANEL

Remove the following connections.			
CIRCUIT	1	2	3
TERMINALS	31 to 33	91 to 93	121 to 123
Make the following connections.			
CIRCUIT	1	2	3
TERMINALS	31 to 32	91 to 92	121 to 122

TABLE 3-8. CONNECTION CHANGES TO REMOVE RERUN MESSAGE NUMBERING

Remove the following connections.			
CIRCUIT	1	2	3
TERMINALS	35 to 36 38 to 39	95 to 96 98 to 99	60 to 61 63 to 65
Make the following connections.			
CIRCUIT	1	2	3
TERMINALS	36 to 37 37 to 38	96 to 97 97 to 98	61 to 62 62 to 63

(6) The transmitter group is wired to supply transmitting line current locally. To supply the transmitting line current remotely, proceed as follows.

(*a*) Remove positive ground from the terminals on the right side of the 200-point terminal board as in table 3-9 or table 3-10 for any circuit change:

TABLE 3-9. FIRST STEP TO SUPPLY TRANSMITTING LINE CURRENT REMOTELY ON ONE LINE ONLY

CIRCUIT	1	2	3
REMOVE STRAPS BETWEEN TERMINALS	162-177 177-179	177-179 179-189	181-189
STRAP TERMINALS	162-179	177-189	None

TABLE 3-10. FIRST STEP TO SUPPLY TRANSMITTING LINE CURRENT REMOTELY FOR TWO OR THREE LINES

CIRCUITS	1 and 2	1 and 3	2 and 3	1, 2 and 3
REMOVE STRAPS BETWEEN TERMINALS ON 200-POINT TERMINAL BOARD	162-177 177-179 179-189	162-177 177-179 181-189	177-179 179-189 181-189	162-177 177-179 179-189 181-189
STRAP TERMINALS ON 200-POINT TERMINAL BOARD	162-189	162-179	177-189	162-189

(*b*) Remove the connection, as shown in table 3-11, from the right side of the 200-point terminal board and tape the end of the lead. (Remove only the lead desired, the other end of which is connected to terminal 14 of the lower slip connectors on the control panel of the circuit(s).)

TABLE 3-11. SECOND STEP TO SUPPLY TRANSMITTING LINE CURRENT REMOTELY FOR ONE, TWO, OR THREE LINES

CIRCUIT	1	2	3
REMOVE CONNECTION FROM TERMINAL ON RIGHT SIDE OF 200-POINT TERMINAL BOARD AND TAPE END	45	105	52

(*c*) Strap the terminals on the right side of the 200-point terminal board as in table 3-12.

TABLE 3-12. THIRD STEP TO SUPPLY TRANSMITTING LINE CURRENT REMOTELY FOR ONE, TWO, OR THREE LINES

CIRCUIT	1	2	3
STRAP TERMINALS	45 to 177	105 to 179	52 to 181

(7) The receiver group is wired to operate with the receiving line current supplied from a remote source. To supply receiving line current locally, proceed as follows.

(*a*) Remove the connection, as shown in table 3-13, from the left side of the 120-point terminal board (remove only the lead, the other end of which is connected to the 24-point connector) and connect as shown in table 3-13.

TABLE 3-13. FIRST STEP TO SUPPLY RECEIVING LINE CURRENT LOCALLY

CIRCUIT	1	2	3	4	5	6
REMOVE LEAD FROM TERMINAL OF 120-POINT TERMINAL BOARD	2	4	6	8	10	12
THE OTHER END OF THE ABOVE LEAD IS CONNECTED TO TERMINAL OF 24-POINT CONNECTOR	A	C	E	G	J	L
CONNECT REMOVED LEAD TO TERMINAL ON 120-POINT TERMINAL BOARD AS SHOWN	13 left side	14 left side	15* left side	15* left side	14 right side	15* right side

*Also strap terminals 14 and 15 on the right side of the 120-point terminal board. This strap places negative battery on terminal 15.

(*b*) Connect positive ground to the terminals on the 120-point terminal board from which the above leads were removed as in table 3-14 (make the connections on the right side of the 120-point terminal board). Connect terminal 21 to one of the following and then strap one to the other as required.

TABLE 3-14. SECOND STEP TO SUPPLY RECEIVING LINE CURRENT LOCALLY

CIRCUIT	1	2	3	4	5	6
TERMINAL ON RIGHT SIDE OF 120-POINT TERM BLOCK	2	4	6	8	10	12

(8) The bias current for the line relay in the receiving cabinet is fixed at 30 milliamperes. To reduce to 10 milliamperes, proceed as in table 3-15.

(9) To transmit to the monitor group during an open line condition, proceed as follows:

(*a*) If battery is supplied locally, insert an open plug into the CIRCUIT JACK at the patch frame. This will close the line at the jack and permit transmission to the monitor.

TABLE 3-15. CONNECTION CHANGES TO REDUCE RECEIVER BIAS TO 10 MA

CIRCUIT	1	2	3	4	5	6
REMOVE STRAPS FROM TERMINAL ON RIGHT SIDE OF 120-POINT TERMINAL BOARD	50	60	70	80	90	100
CONNECT STRAPS REMOVED ABOVE TO TERMINAL ON RIGHT SIDE OF 120-POINT TERMINAL BOARD	51	61	71	81	91	101

(*b*) If battery is supplied remotely, insert a jack, connected to line battery, into the set jack at the patch frame (observe polarity).

e. ASSEMBLING AND CONNECTING THE EQUIPMENT.—Assemble and connect the set according to the following instructions. The equipment supplied is assembled for 60 wpm operation. To convert to 75 or 100 (experimental) wpm operation, see paragraph 2*f.*, of this section.

(1) RECEIVER GROUP OA-616/FGC-38, OA-619/FGC-38X, OR OA-622/FGC-39.—Four reperforators, four control panels, four line relays, six message log holders, two tape bins, and one power supply must be mounted in the Receiver Group.

Mount the two tape grips on the two holes in the upper front wall of the cabinet. To mount, insert the shank of the tape grip into the hole. Place the tape grip spring over the shank, hold the spring onto the shank using the number six washer and number 6-40 nut supplied, and lock the assembly with the second number 6-40 nut.

Mount the reperforators (see figure 3-10) by placing them on the shock-mount pins on the shelves of the receiver cabinet. Be sure that the shock-mount pins mate with the holes in the reperforator base. The tape feed-out mechanism must be over the cutout in the rotating tray. Remove the muslin bag containing the speed conversion parts and place them in the accessory box on the bottom of the cabinet.

Mount the four tape container assemblies using the hardware tied to the assemblies. The assemblies mount over the two holes on the rear of the sliding shelves with the contact pile-up toward the right wall of the cabinet. Place a flat washer on the screw, then the spring; screw into the base of the container assembly so that the hexagonal nut can be fastened on top of the

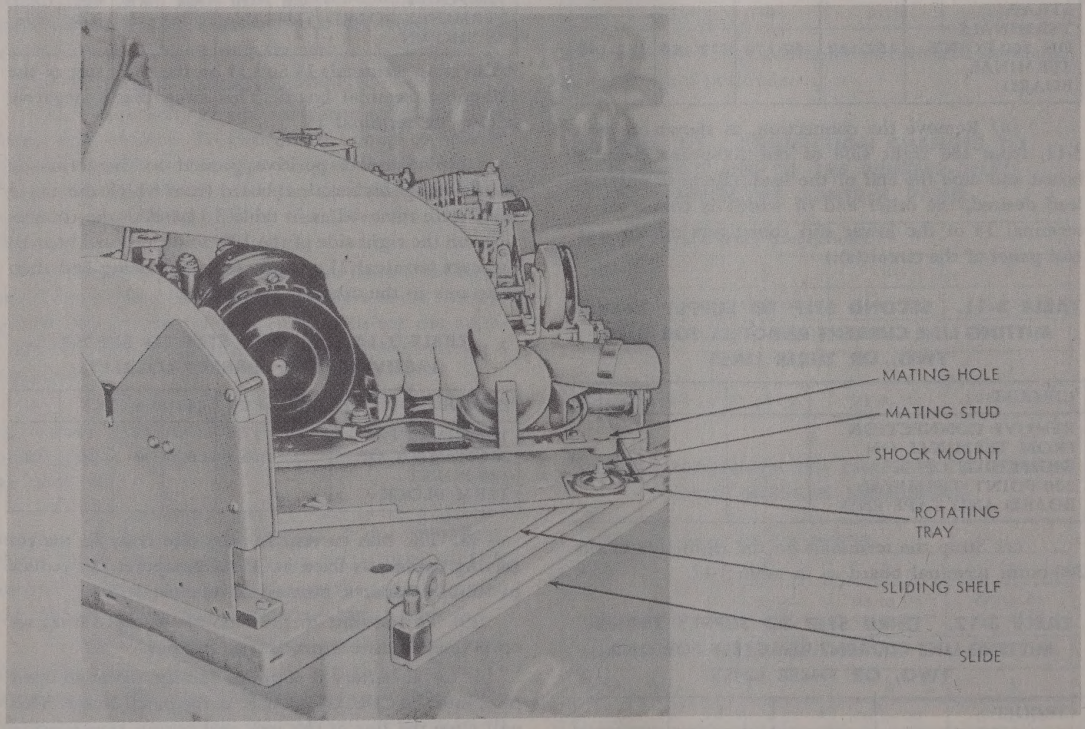

Figure 3—10. Mounting a Reperforator

base for locking. This should provide a spring-loaded tape container that can be pulled foward at the top to permit tape loading when front accessibility of the shelf is used.

Mount the four tape deflectors on the four reperforators. The tape deflectors mount on the left side of the front of the base plate of the reperforators using the screws in the base plate. Clip the spring tape deflector to the mounted tape deflector.

Mount the four tape guides on the four reperforators. The guides mount on the front of the right side of the base plate with the screws of the base plate.

The control panels are mounted in the top section of the cabinet from the front or rear depending upon whether front or rear accessibility is used in the installation. To mount the control panels, insert the end opposite to the thumb screw into the slot in the mounting strip, push the control panel into a vertical position, and screw the thumb screw into the tapped hole in the mounting strip.

Place the power supply in the bottom of the receiver group cabinet in the right front corner with the front of the power supply facing the rear for rear accessibility or facing the front for front accessibility.

Place the reperforator 15-connector plugs in the 15-connector receptacles on the wireway. The reperforator cords for the reperforators on the right side shelves of the cabinet fit into the receptacles on the right side wireway. The upper reperforators fit into the upper receptacles, the middle reperforators fit into the middle receptacles, and the lower receptacles, if they are to be installed, fit into the lower receptacles. The three-connector power plugs fit into the receptacles on the same level as the 15-connector receptacles (see figure 3-11). Power cords on the reperforators on the left bank should be placed under cable clamps on left wireway as shown in figure 5-1.

CAUTION

When withdrawing or returning shelves, the cables must be hand guided to prevent them from snarling or catching on the motor or shelf.

The control panel plugs fit into the receptacles on the wireway (see figure 3-11). The two control panel plugs on the right side of the cabinet fit into the two receptacles on the right side wireway, and the two control panel plugs on the left side of the cabinet fit into the left side wireway.

Place the power supply power input cord into the receptacle at the bottom front of the right side wireway, and the power output cord into the receptacle at the bottom rear of the right side wireway (see figure 3-11).

Place the two-connector plug on the cable from the tape container into the receptacle at the rear of the reperforator.

When the cabinet is to be mounted for front accessibility, the sliding shelves mounting the reperforators must be reversed. Rearrange the latch and slides as shown in figure 3-12.

(2) TRANSMITTER GROUP OA-615/FGC-38, OA-618/FGC-38X, OR OA-621/FGC-39.—Six message distributor-transmitters, three numbering distributor-transmitters, three control panels, the message and numbering distributor-transmitter bases, the tape holder, and the power supply must be mounted in the transmitter group.

Mount the tape holder on top of the transmitter cabinet using the hardware tied to it. The tape holder should be adjusted so that the edges of the bottom of the tape holder are parallel with the top of the cabinet.

Drop the front plate of the message distributor-transmitter base by removing the screws holding the plates to the base. Place three of the screws and bushings from the bag in the three rear raised tapped holes in the base.

Slide the message distributor-transmitter under the screw until the gears of the distributor-transmitter and the base shaft mesh with a barely perceptible backlash. Be sure the slip connectors on the distributor-transmitters mate properly with the slip connector receptacles on the message distributor-transmitter base. Place the screws in the two front tapped holes and tighten the screws. Repeat this for the other two distributor-transmitters. Replace the front plate of the base. Repeat this for both message bases. Place each base on the front shelves of the transmitter cabinet so that they are centered on the shelf. The signal cord from the upper message distributor-transmitter base must be placed over the central wall of the cabinet and into the upper receptacle in the wireway (see figure 3-13). Place the power cord over the central wall and place it in the receptacle in the wireway (see figure 3-13). Guide the lower message base signal and power cords through the hole in the cabinet central wall. Place them in the receptacle provided in the wireway (see figure 3-13).

Remove the front plate of the numbering distributor-transmitter base and mount the three numbering distributor-transmitters in the base in the same way as the message distributor-transmitters are mounted. Mount the tape snubbers on the base with the screws provided in the muslin bags. Remove the muslin bags containing the speed conversion parts from the distributor-transmitters and bases and place them in the accessory box on the sliding shelf.

Pull out the sliding shelf in the rear of the transmitter cabinet by raising the thumb screw on the left

side of the sliding shelf assembly and pulling out the shelf. Center the base on the shelf and lead and place the power and signal cords in the receptacles in the wireway (see figure 3-13). When pushing the shelf back in its operating position, hand guide the power and signal cords.

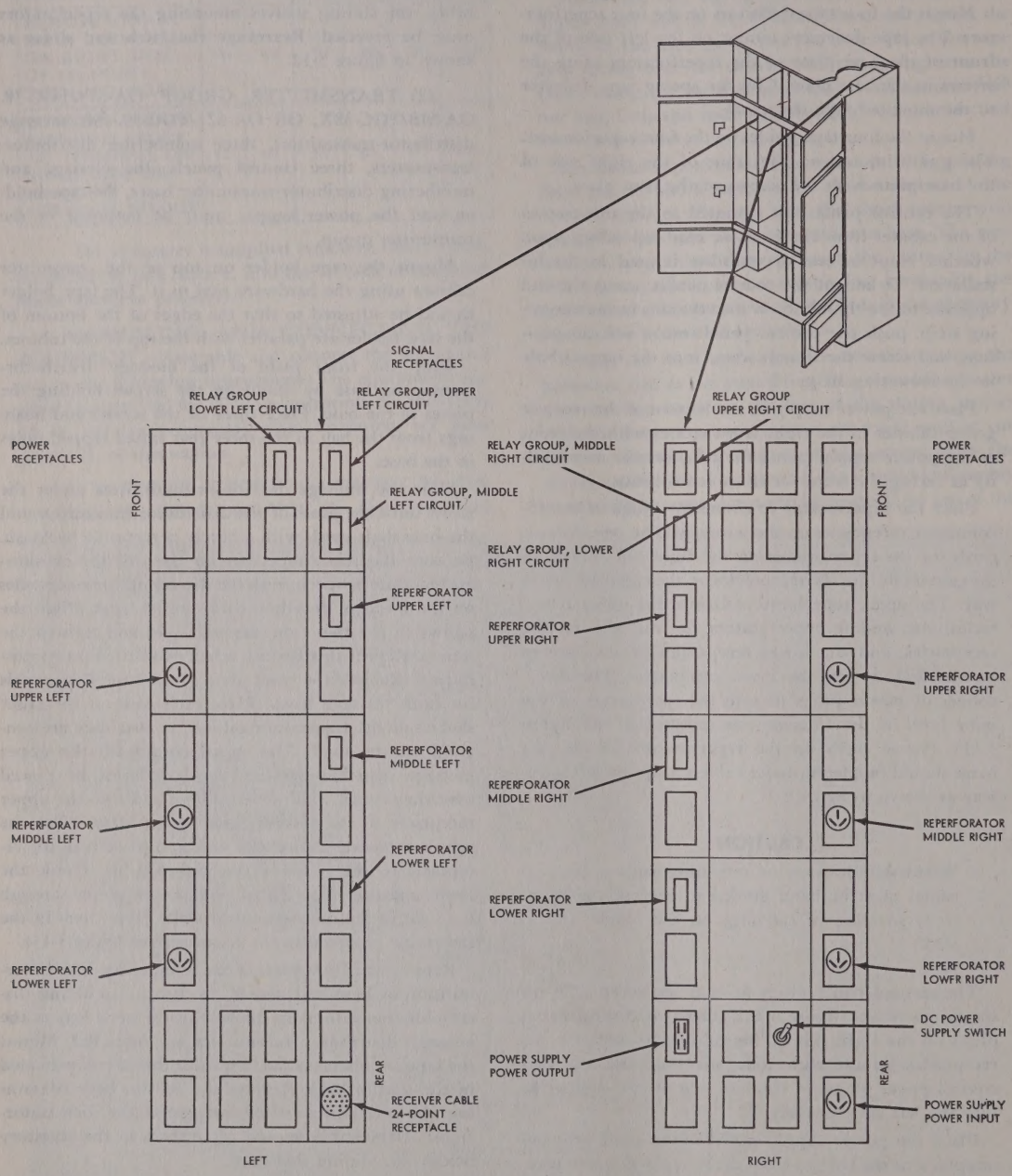

Figure 3—11. Receiver Group OA-616/FGC-38, OA-619/FGC-38X, or OA-622/FGC-39, Left and Right Side Wireway

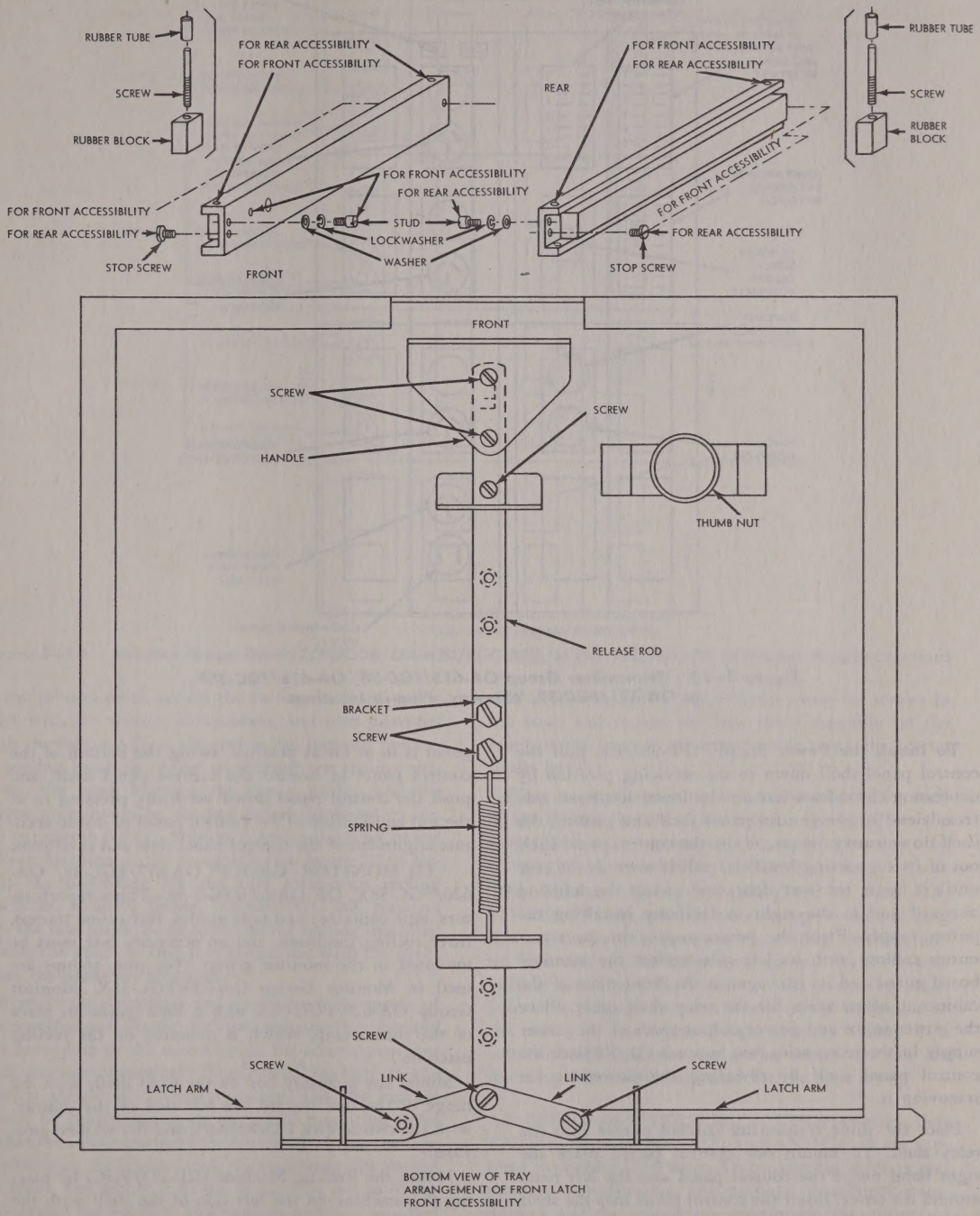

BOTTOM VIEW OF TRAY
ARRANGEMENT OF FRONT LATCH
FRONT ACCESSIBILITY

Figure 3–12. Receiver Cabinet CY-1523/FGC, Shelf Arrangement for Front Accessibility

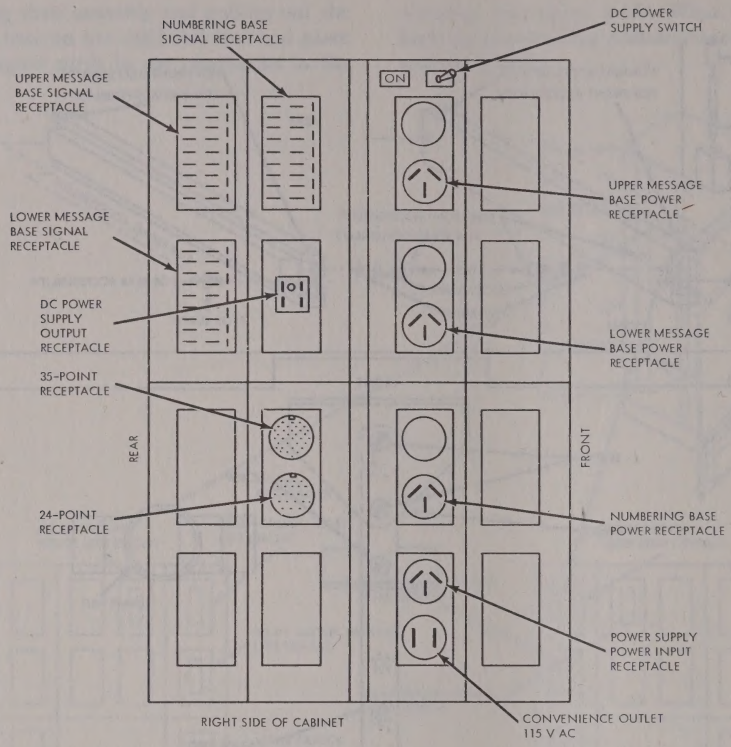

Figure 3—13. Transmitter Group OA-615/FGC-38, OA-618/FGC-38X, or OA-621/FGC-39, Wireway, Plug-in Locations

To install the Power Supply (PP-987/U), pull the control panel shelf down to the servicing position by depressing the release bar on the lower left-hand side (rear view) of the control panel shelf and pulling the shelf downward in an arc. Raise the control panel shelf out of its supporting brackets, pull it towards the rear until it clears the rear door, and swing the left end outward and to the right to facilitate installing the power supply. Place the power supply in the transmitter cabinet with its left side against the terminal board guard and its rear against the front plate of the cabinet to allow space for the relay shelf cable. Place the power input and power output cords of the power supply in the receptacles (see figure 3-13). Replace the control panel shelf by reversing the procedure for removing it.

Place the three transmitter control panels into the relay shelf. To mount one control panel, place the right hand under the control panel and the left hand around the cover, insert the control panel into the shelf as high as possible with the bottom of the control panel held away from the shelf. When the top of the control panel is in as far as possible, swing the bottom of the control panel in toward the control panel shelf, and push the control panel down vertically pressing in at the top and bottom of the control panel to insure accurate alignment of the control panel slots and shelf pins.

(3) MONITOR GROUP OA-617/FGC-38, OA-620/FGC-38X, OR OA-623/FGC-39.—Three reperforators, tape container and tape guides, three time stamps, three reeling machines, and an accessory box must be mounted in the monitor group. (No time stamps are used in Monitor Group OA-620/FGC-38X. Monitor Group OA-620/FGC-38X uses a tape guide in place of the time stamp, which is mounted on the reeling machine.)

Mount the accessory box on the fixed shelf, with the hinge of the box toward the left side of the cabinet, with the two screws, lockwashers, and flat washers provided.

Mount the Reeling Machine (RL-173/FGC) by placing the machine on the left side of the shelf with the tape snubbers facing the front, and line up the two holes in the reeling machine base plate with the holes

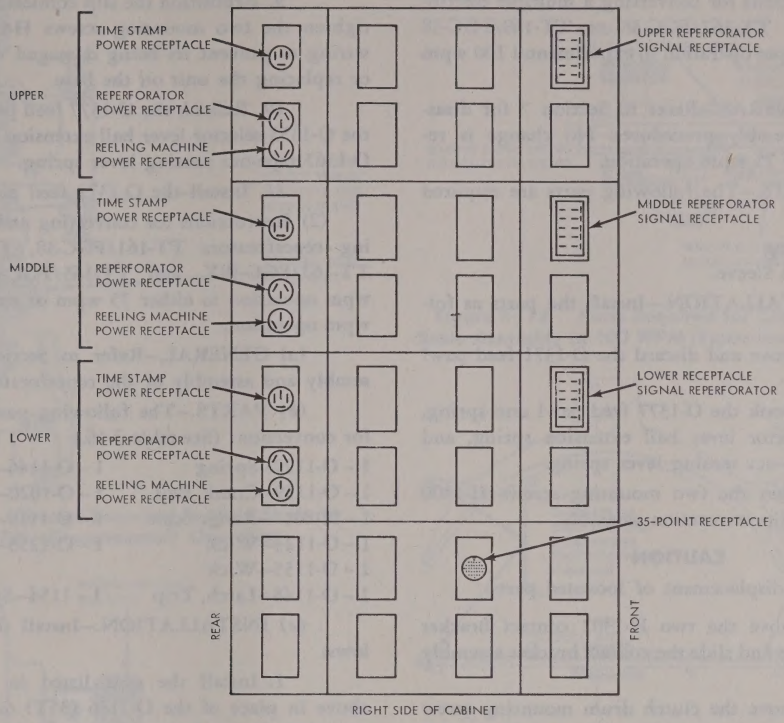

Figure 3–14. Monitor Group OA-617/FGC-38, OA-620/FGC-38X, or OA-623/FGC-39, Wireway, Plug-in Locations

in the cabinet shelf. Secure the reeling machine to the shelf with the screws, lockwashers, and nuts provided with the cabinet. Place the reel in the forward notches of reeling machine. After unpacking the reeling machine, the mesh between the motor pinion and the driven gear should be checked before applying power. See paragraph 6.*d.*(1), Section 7. Insert the plug of the reeling machine in the receptacle (see figure 3-14). Repeat the procedure for the two remaining reeling machines. Monitor Group OA-620/FGC-38X requires that the tape guide be mounted on the reeling machine. Mount the guide so that it is horizontal with the shelf, using the hardware supplied.

Remove the nameplate and guard from the motor of the reperforator. Secure the tape container bracket and the nameplate to the motor using the screws provided with the tape container. The cutout portion of the bracket should be toward the rear, and the bracket should be positioned in its elongated mounting holes so that the upper portions are horizontal. Place the tape container on the bracket with the mounting slot toward the front, and secure it to the bracket by means of the two screws, flat washers, lockwashers, and nuts supplied with the container. Place the speed conversion parts in the accessory box. Mount the tape guide on the right side of the base of the reperforator using the screws in the base, and mount the tape shute assembly on the front of the base of the reperforator using the screws in the base.

Place a reperforator on the shock mounts on each of the sliding shelves of the monitor group. Place the power and signal plugs of the reperforators in the receptacles in the wireway (see figure 3-14).

In Monitor Groups OA-617/FGC-38 and OA-623/FGC-39 only, place a time stamp on each sliding shelf of the cabinet between the reeling machine and the reperforator. Slide the time stamp toward the rear until it mates with both studs on the mounting plate. Insert the plug of the time stamp in the receptacle in the wireway (see figure 3-14). Monitor Group OA-620/FGC-38X does not use a time stamp. Do not use the receptacles ordinarily used for the time stamp.

f. SPEED CONVERSION. — Teletypewriter Sets AN/FGC-38, AN/FGC-38X, and AN/FGC-39 are supplied to operate at 60 wpm. To convert the receiver and monitor reperforators, the message distributor-transmitters, and the numbering distributor-transmitters to 75 or 100 (experimental) wpm, proceed with the following instructions:

(1) Instructions for converting a multiple distributor-transmitter TT-167/FGC-38 or TT-169/FGC-38 from 60 or 75 wpm operation to experimental 100 wpm operation.

(*a*) GENERAL.—Refer to Section 7 for disassembly and assembly procedures. No change is required for 60 or 75 wpm operation.

(*b*) PARTS.—The following parts are required for conversion

1 - O-1372—Spring
1 - O-1312—Cam Sleeve.

(*c*) INSTALLATION.—Install the parts as follows:

1. Remove and discard the O-1371 feed pawl spring.

2. Unhook the O-1377 feed pawl arm spring, the O-1353 selector lever bail extension spring, and the O-1367 tape-out sensing lever spring.

3. Loosen the two mounting screws H-1300 and move the slip connection assembly.

CAUTION

Prevents displacement of loosened parts.

4. Remove the two H-1302 contact bracket mounting screws and slide the contact bracket assembly to the right.

5. Remove the clutch drum mounting screw nut, lockwasher, and screw. Move the cam shaft with its gear far enough toward the left to remove the cam sleeve O-1311 and the shims O-1314.

CAUTION

Take care not to lose any of the shims.

6. Install the O-1312 cam sleeve and add O-1314 shims at the right end of the assembly until the proper clearance is obtained. With the screw and lockwasher replaced in the driving clutch member, the transmitting cam sleeve assembly should have a maximum end play of 0.002 inch.

7. Replace the clutch drum mounting screw H-1369, lockwasher H-1368, and nut H-1367.

8. Replace the contact bracket assembly; dress the wiring to prevent interference with moving parts.

9. Reposition the slip connector assembly and tighten the two mounting screws H-1300. Dress the wiring to prevent its being damaged when removing or replacing the unit on the base.

10. Rehook the O-1377 feed pawl arm spring, the O-1353 selector lever bail extension spring, and the O-1367 tape-out sensing lever spring.

11. Install the O-1372 feed pawl spring.

(2) Instructions for converting and adjusting typing reperforators TT-161/FGC-38, TT-164/FGC-38, TT-162/FGC-38X, and TT-165/FGC-38X, from 60 wpm operation to either 75 wpm or experimental 100 wpm operation.

(*a*) GENERAL.—Refer to Section 7 for disassembly and assembly of the reperforators.

(*b*) PARTS.—The following parts are required for conversion: (See table 3-16.)

1 – O-1122—Spring	1 – O-1146—Spring
1 – O-1139—Crank, Bell	1 – O-1020—Spring, Clutch
1 – N-801 —Range Scale	1 – O-1119—Spring
1 – O-1123—Wick	1 – O-1253—Main Bail
1 – O-1155—Wick	Assembly
1 – O-1148—Latch, Trip	1 – 1154—Spring

(*c*) INSTALLATION.—Install the parts as follows:

1. Install the gear listed in paragraph (*b*) above in place of the O-1186 (35T) or O-1007 (30T) gear. Install the pinion in place of the O-605 (7T) or O-711 (7T) pinion (60 wpm). See figures 3-15 and 3-16.

2. Install the O-1020 clutch spring in place of the O-1019 clutch spring. (See figure 3-17.)

3. Insert the O-1156 wick in the O-1154 selector arm spring and install the spring in place of the O-1153 selector arm spring. (See figure 3-17.)

4. Install the O-1119 selector arm detent spring in place of the O-1118 selector arm detent spring. (See figure 3-17.)

5. Install the O-1148 trip latch in place of the O-1147 trip latch. (See figure 3-18.)

6. Install the O-1146 trip latch spring in place of the O-1145 trip latch spring. (See figure 3-18.)

7. Install the O-1139 bell crank in place of the O-1138 bell crank. (See figure 3-18.)

TABLE 3-16. PARTS FOR CONVERTING TYPING REPERFORATORS TO 100 WPM (EXPERIMENTAL) OPERATION

MODEL	QTY	75 WPM				100 WPM			
		PINION	(TEETH)	GEAR	(TEETH)	PINION	(TEETH)	GEAR	(TEETH)
TT-161/FGC-38 TT-164/FGC-38	1	O-1218	7	O-1008	24	O-1219	16	O-1009	42
TT-162/FGC-38X TT-165/FGC-38X	1	O-1221	8	O-1187	32	O-1222	14	O-1188	43

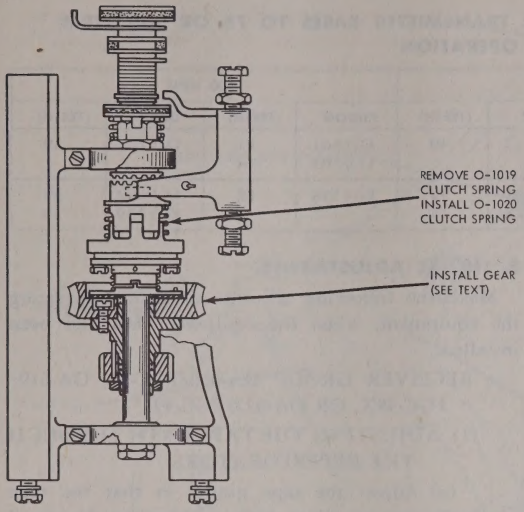

Figure 3-15. Change Required in Main Shaft for 100 WPM (Experimental) Operation

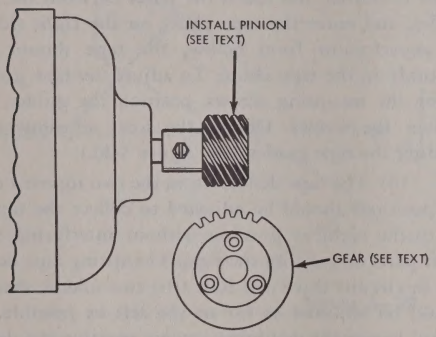

Figure 3-16. Motor Pinion Change for 100 WPM (Experimental) Operation

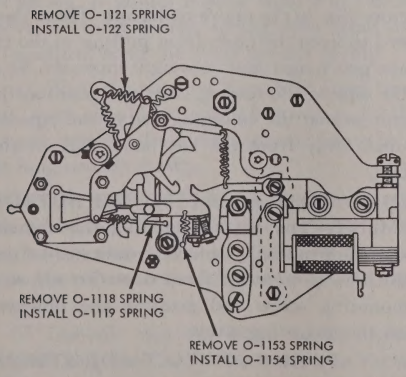

Figure 3—17. Parts Required for Changing Selector Mechanism to 100 WPM (Experimental) Operation

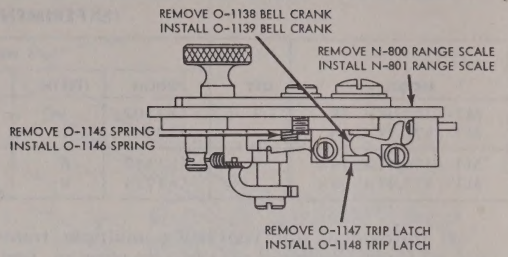

Figure 3—18. Parts Required for Changing Range Scale Assembly to 100 WPM (Experimental) Operation

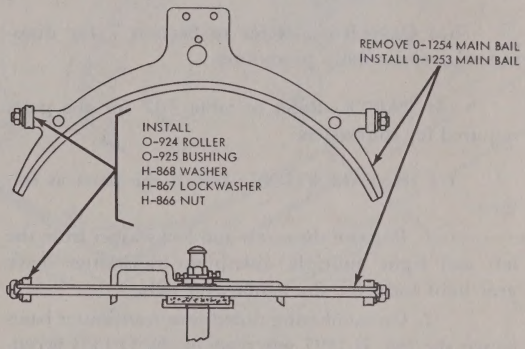

Figure 3—19. Parts Required for Changing Main Bail to 100 WPM (Experimental) Operation

8. Install the N-801 range scale in place of the N-800 range scale. (See figure 3-18.)

9. Insert the O-1123 wick in the O-1122 locking lever spring and install the spring in place of the O-1121 locking lever spring. (See figure 3-19.)

10. Replace the O-1254 main bail with the O-1253 main bail. (See figure 3-19.)

11. Remove and discard the O-1181 pull bar stripper.

(*d*) ADJUSTMENTS.—Remake all adjustments that have been disturbed (refer to Section 7). Change the requirements for the following adjustments.

Adjustment	*New Requirements*
Selector Arm Detent Spring Tension	6¾-7¾ ozs.
Armature Spring Tension	22-26 ozs.
Selector Arm Spring	1¾-2¼ ozs.
Trip Latch Spring Compression	3-3½ ozs.
Selector Clutch Torque	16-22 ozs.
Main Shaft Clutch Spring Tension	40-64 ozs.
Selector Separator Plates Adjustment	0.050"-0.060"
Locking Lever Spring Tension	7-10 ozs.

TABLE 3-17. PARTS FOR CONVERTING MULTIPLE TRANSMITTER BASES TO 75 OR 100 WPM (EXPERIMENTAL) OPERATION

MODEL	QTY	75 WPM				100 WPM			
		PINION	(TEETH)	GEAR	(TEETH)	PINION	(TEETH)	GEAR	(TEETH)
MT-1369/FGC-38 MT-1372/FGC-38	1	O-1502 O-1702	11 11	O-1712	40	O-1501 O-1701	14 14	O-1711	39
MT-1370/FGC-38X MT-1373/FGC-38X	1	O-1557 O-1724	8 8	O-1561 O-1728	34 34	O-1558	12	O-1562 O-1729	39 39

(3) Instructions for converting multiple transmitter base MT-1369/FGC-38, MT-1372/FGC-38, MT-1370/FGC-38X, or MT-1373/FGC-38X from 60 wpm operation to either 75 wpm or experimental 100 wpm operation.

(*a*) GENERAL.—Refer to Section 7 for disassembly and assembly procedures.

(*b*) PARTS.—Refer to table 3-17 for the parts required for conversion.

(*c*) INSTALLATION.—Install the parts as follows:

1. Remove the screw and lockwasher from the left and right multiple distributor-transmitter drive gear hubs and from the motor gear hub.

2. On numbering distributor-transmitter bases loosen the two H-1595 setscrews in the O-1533 eccentric hub assembly.

3. Slide the main shaft O-1545 to the left. Remove the right multiple distributor-transmitter drive gear O-1543 and the motor gear and hub assembly. Remove the O-1538 (50T) or O-1560 (53T) motor gear (60 wpm) from its hub.

4. Remove the H-1526 gear guard.

5. Remove the H-1522 screw and H-1523 lockwasher from the O-1503 (11T) or O-605 (10T) motor pinion (60 wpm) and remove the pinion from the motor shaft.

6. Install the 75 or 100 wpm pinion on the motor shaft.

7. Replace the H-1526 gear guard.

8. Place the 75 or 100 wpm motor gear on the hub and secure with screws and washers.

9. Place the motor gear and right drive gear on the main shaft and slide the shaft back into position.

10. Secure the right and left drive gears and motor gear to the main shaft.

11. On numbering distributor-transmitter bases tighten the two H-1595 setscrews in the O-1533 eccentric hub assembly.

12. Check any adjustments that may have been disturbed. Refer to Section 7.

3. INITIAL ADJUSTMENTS.

Make the following adjustments before operating the equipment, when the equipment has first been installed.

a. RECEIVER GROUP OA-616/FGC-38, OA-619/FGC-38X, OR OA-622/FGC-39.

(1) ADJUSTING THE TAPE PATH THROUGH THE REPERFORATORS.

(*a*) Adjust the tape guides so that the tape leaves the tape container without riding on the round spacer. The tape should be 1/16-inch from the panel of the container, not touch the wires between the tape guides, and enter the tape chute on the right side of the reperforator from below; the tape should ride smoothly in the tape chute. To adjust the tape guides, loosen the mounting screws, position the guides, and tighten the screws. Obtain the final adjustment by bending the tape guides. (See figure 3-20.)

(*b*) The tape deflectors on the two topmost cabinet positions should be adjusted to deflect the tape as far to the right as possible without interfering with other parts or snarling the tape. The spring tape deflectors in circuits three and four (the two middle shelves) should be adjusted as far to the left as possible. To adjust, loosen the mounting screws, position the deflectors, and tighten the mounting screws. Make sure that the tape deflectors are positioned vertically with respect to the openings in the cabinet doors. The spring-type deflectors clip to the above deflectors. These should be adjusted to keep the tapes from pulling to the right as the tape gets longer and its weight increases. To adjust, tear the tape at the tearing edge and position the tape deflector so that the emerging end of the tape is about 1/16-inch away from the left hand edge of the tape deflector.

(2) MANUAL TAPE FEED-OUT BUTTON ADJUSTMENT.—The bracket holding the manual tape feed-out push button should be positioned so that it is 1/16-inch away from the front door. To adjust, loosen the mounting screw and position the bracket, then tighten the mounting screw.

(3) TAPE-OUT CONTACT ADJUSTMENT.

(*a*) The stiffener of the short tape-out contact should be straight. Adjust by bending stiffener.

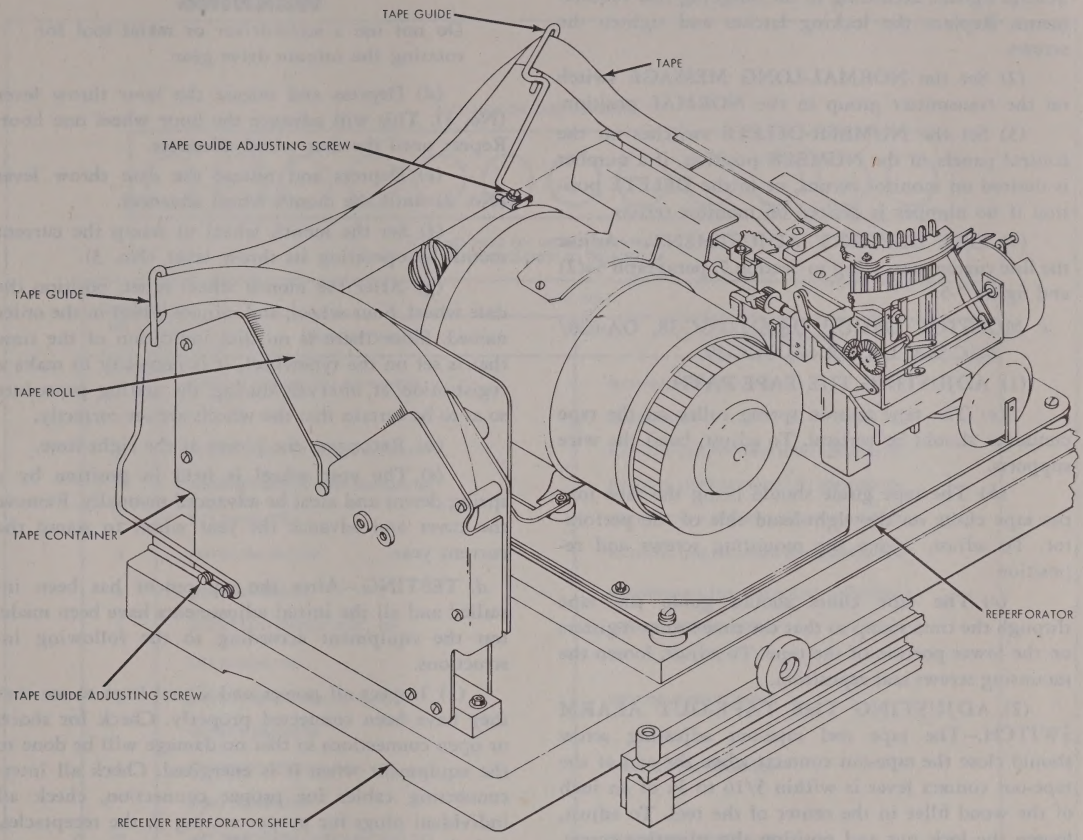

Figure 3—20. Adjusting the Tape Guides

(*b*) With the tape-out lever held away from the contacts, push down with an 8 ounce scale on the short contact spring. It should require from 2 to 3 ounces to just move the short contact spring away from its stiffener. To adjust, bend the short contact spring.

(*c*) With the tape-out lever held away from the contacts, there should be from 0.045 inch to 0.055 inch contact gap between the contact points. Adjust by bending the long contact spring.

(*d*) The tape-out lever should close the tape-out contacts when the end of the tape-out lever is within 5/16 inch to 3/8 inch of the wood filler in the center of the tape container. Adjust by bending the tape-out lever.

(*e*) Unhook tape-out lever spring from the spring post and hook a 32-ounce scale in the spring eye. With the tape-out lever held parallel to the bottom of the container, it should require 12 to 16 ounces to stretch the spring to position length. Replace the spring on the spring post.

(4) POLAR-NEUTRAL SWITCH.—Place the POLAR-NEUTRAL switches on the control panels in the POLAR or NEUTRAL position, according to the signal on the incoming line. Always replace the locking latch to prevent inadvertent operation of the switches. Do this for all the incoming lines.

(5) LENGTH OF TAPE FEED OUT.—The receiver reperforators are adjusted to feed out 30 inches of tape. To change the length of feed out, see the reperforator tape feed out clutch adjustments (Section 7, paragraph 6*g*(98)).

b. TRANSMITTER GROUP OA-615/FGC-38, OA-618/FGC-38X, OR OA-621/FGC-39.

(1) Lift the locking latches after loosening the mounting screws and set the POLAR-NEUTRAL switches on each control panel to transmit polar or

neutral signals, according to the outgoing line requirements. Replace the locking latches and tighten the screws.

(2) Set the NORMAL-LONG MESSAGE switch on the transmitter group in the NORMAL position.

(3) Set the NUMBER-DELETE switches on the control panels in the NUMBER position, if a number is desired on monitor reruns, or in the DELETE position if no number is desired on monitor reruns.

(4) LINE CURRENT ADJUSTMENT. — Adjust the line current according to Section 7, paragraph 5*a*(2) and figure 7-5.

c. MONITOR GROUP OA-617/FGC-38, OA-620/FGC-38X, OR OA-623/FGC-39.

(1) ADJUSTING THE TAPE PATH.

(*a*) The tape tension spring roller on the tape container should be vertical. To adjust, bend the wire supports.

(*b*) The tape guide should bring the tape into the tape chute on the right-hand side of the perforator. To adjust, loosen the mounting screws and reposition.

(*c*) The tape chute should guide the tape through the time stamp so that the time stamp registers on the lower portion of the tape. To adjust, loosen the mounting screws and reposition.

(2) ADJUSTING THE TAPE-OUT ALARM SWITCH.—The tape reel tape-out adjusting screw should close the tape-out contacts when the end of the tape-out contact lever is within 5/16 to ⅜ of an inch of the wood filler in the center of the reel. To adjust, loosen the lock nut and position the adjusting screw. Tighten the lock nut.

(3) RESET TIME STAMP.—When the time stamp is installed in its operating position (in Monitor Groups OA-617/FGC-38 and OA-623/FGC-39 only), the cover is not removable. However, a door in the top of the cover provides access to the throw-lever extensions (No. 1, 2, and 3) and the drive mechanism. The typewheels may then be advanced manually to reset the time registration by depressing the throw levers and by moving the minute drive mechanism.

(*a*) In order that the typewheels unlock, feed, and then lock again, a definite sequence must be followed in setting the typewheel position. Each typewheel should stop in its locked or detented position for proper printing.

(*b*) If a typewheel change in excess of a few minutes is to be made, disconnect the power just after a minute advance occurs.

(*c*) Raise the drive lever to unlock the ratchet feed pawl. Rotate the minute drive gear until the hour push pawl advances the hour wheel.

WARNING

Do not use a screwdriver or metal tool for rotating the minute drive gear.

(*d*) Depress and release the hour throw lever (No. 1). This will advance the hour wheel one hour. Repeat until the date wheel advances.

(*e*) Depress and release the date throw lever (No. 2) until the month wheel advances.

(*f*) Set the month wheel to stamp the current month by operating its throw lever (No. 3).

(*g*) After the month wheel is set, position the date wheel, hour wheel, and minute wheel in the order named. Since there is no dial indication of the time that is set on the typewheel, it is necessary to make a registration at intervals during the setting procedure so as to be certain that the wheels are set correctly.

(*h*) Reconnect the power at the right time.

(*i*) The year wheel is held in position by a spring detent and must be advanced manually. Remove the cover and advance the year wheel to stamp the current year.

d. TESTING.—After the equipment has been installed and all the initial adjustments have been made, test the equipment according to the following instructions.

(1) Inspect all power and signal lines to see that they have been connected properly. Check for shorts or open connections so that no damage will be done to the equipment when it is energized. Check all interconnecting cables for proper connection, check all individual plugs for proper seating in the receptacles, and check the cords and cables for proper placement and anchorage. Inspect each solder connection to see that no "cold solder" joints have been made. Make sure all fuses are installed and have the correct value (see Section 5).

(2) Energize the equipment by placing the d-c power supply switches in the transmitter and receiver groups in the ON position, and the switches on the wireways of the transmitter and receiver groups in the ON position. The pilot lamps of the d-c power supplies should light. Then turn on all the reperforator switches in the receiver and monitor groups (except the SPARE position of the receiver groups), and turn on the message and numbering distributor-transmitter base switches of the transmitter groups. Turn on all the reeling machine switches.

(3) Press all the RESET buttons. If one or more OPEN LINE alarm lamps do not extinguish, that line is open (see Section 7 to determine cause).

(4) Insert a message tape in each distributor-transmitter in every transmitter group, load every tape container in both the monitor and receiver groups, and

JACK STRIP ON CABLE ASSEMBLIES

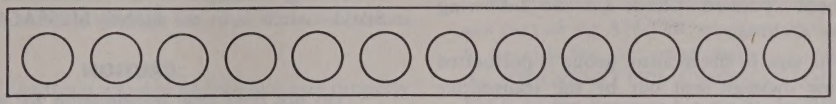

TO BE MOUNTED ON THE PATCHING FRAME
WITH THE JACKS CLOSEST TO THE BOTTOM

JACK NO.	FUNCTION	
	TRANSMITTER CABLE	RECEIVER CABLE
1	SENDING LINE FOR LEFT TRANSMITTER	RECEIVING LINE FOR UPPER LEFT REPERFORATOR
2	SENDING LINE FOR CENTER TRANSMITTER	RECEIVING LINE FOR UPPER RIGHT REPERFORATOR
3	SENDING LINE FOR RIGHT TRANSMITTER	RECEIVING LINE FOR MIDDLE LEFT REPERFORATOR
4	LEFT TRANSMITTER	RECEIVING LINE FOR MIDDLE RIGHT REPERFORATOR
5	CENTER TRANSMITTER	RECEIVING LINE FOR LOWER LEFT REPERFORATOR
6	RIGHT TRANSMITTER	RECEIVING LINE FOR LOWER RIGHT REPERFORATOR
7	CIRCUIT FOR EXTERNAL SYNC. TO LEFT TRANSMITTER	UPPER LEFT REPERFORATOR
8	CIRCUIT FOR EXTERNAL SYNC. TO CENTER TRANSMITTER	UPPER RIGHT REPERFORATOR
9	CIRCUIT FOR EXTERNAL SYNC. TO RIGHT TRANSMITTER	MIDDLE LEFT REPERFORATOR
10	LEFT TRANSMITTER CLUTCH MAGNET CKT.	MIDDLE RIGHT REPERFORATOR
11	CENTER TRANSMITTER CLUTCH MAGNET CKT.	LOWER LEFT REPERFORATOR
12	RIGHT TRANSMITTER CLUTCH MAGNET CKT.	LOWER RIGHT REPERFORATOR

PATCHING JACKS ON RECEIVER GROUP

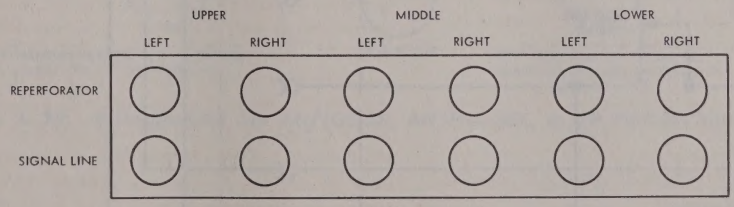

POSITIONS 5 AND 6 ARE NOT EQUIPPED
POSITION 4 IS STRAPPED TO BE USED AS SPARE

Figure 3—21. KEY Group Jack Strips and Receiver Group Patching Jacks

load the numbering distributor-transmitters with numbering tapes. Depress and release the release bars of the message distributor-transmitters starting with KEY group the top left (circuit 1, upper), then the bottom left, and progress down the line until all the release bars have been operated. Check for the following operations on all lines.

(*a*) The tape in the monitor group is perforated with the same message sent out by the transmitter group, the number appears on the monitor tape previous to each message, the tape is stamped with the time and date every minute during the busy line condition (in Monitor Groups OA-617/FGC-38 and OA-623/FGC-39 only), and the tape is reeled up by the reeling machine without snarling or tearing.

(*b*) When the message from the upper distributor-transmitter on each circuit is completed, the lower message distributor-transmitter begins its transmission, after the insertion of a number.

(*c*) The time stamp operates when:

1. a message is running,
2. the transmitter release bar is held down,
3. the channel BUSY lamp is lit,
4. a plug is in the RERUN jack (even without a running message) or the NORMAL-LONG MESSAGE switch is in the LONG MESSAGE position.

CAUTION

Do not hold tape transmission for an appreciable length of time with release bar down, or the tape in the time stamp will be mutilated.

(5) For one method of checking a receiving reperforator, inject a signal from a test transmitter on each set jack at the patch frame in the KEY group or on the reperforator jacks at the front of the groups. Check the message coming out of the reperforator to see that it is the same as the message that was put on the line. Battery must be supplied in series with the

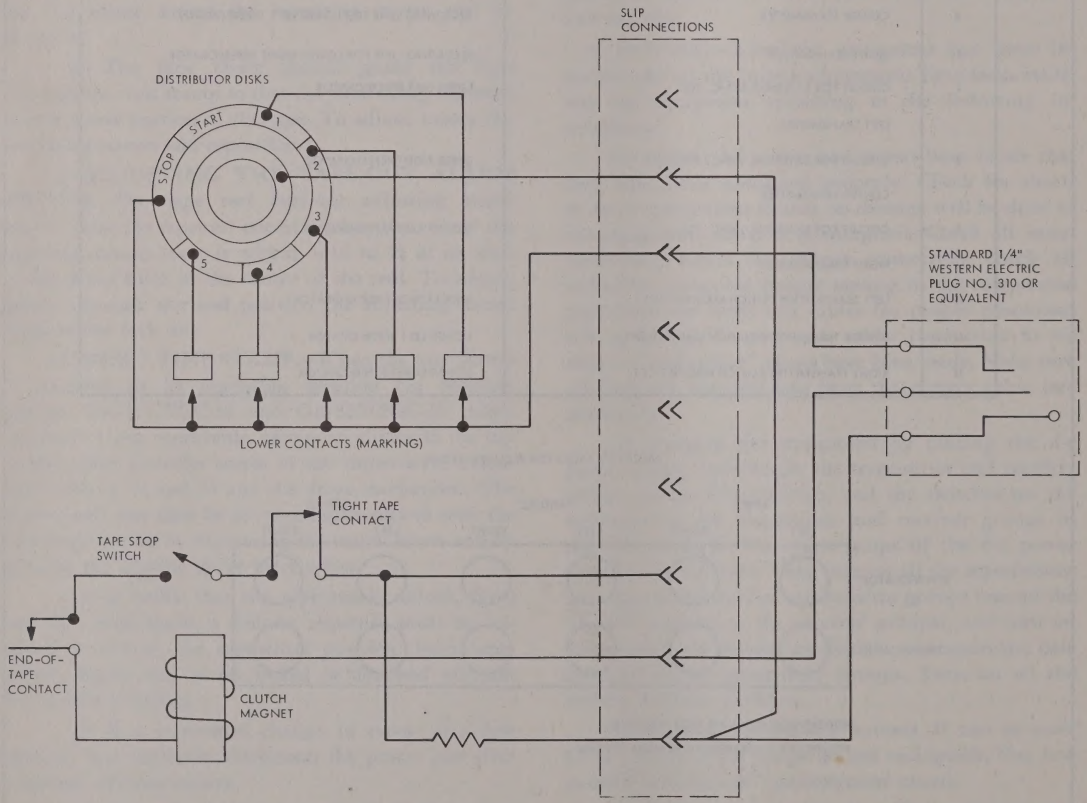

Figure 3—22. External Connections to Distributor-Transmitter to Adapt It for Auxiliary Use with AN/FGC-38, AN/FGC-38X, or AN/FGC-39

test transmitter (polarity must be correct). (See figure 3-16.)

(6) Check for the following operations. For operating procedures, refer to Section 4.

(*a*) The long message facility (if used) operates properly.

(*b*) The rerun message facility operates properly with and without a number (using the NUMBER-DELETE switch).

(*c*) Check the TAPE OUT lamps.

(7) Check the receiving range with the signal on the incoming line according to the procedure in Section 7, paragraph 5.

4. AUXILIARY EQUIPMENT.

An auxiliary distributor-transmitter (not furnished as a part of the AN/FGC equipment) must be available to provide for the transmission of messages through the TRANSMITTER CIRCUIT (LONG MESSAGE) JACK of the Receiver Group or the RERUN TRANSMITTER JACK of the Monitor Group. When so used, the auxiliary distributor-transmitter must be modified as shown in figure 3-22.

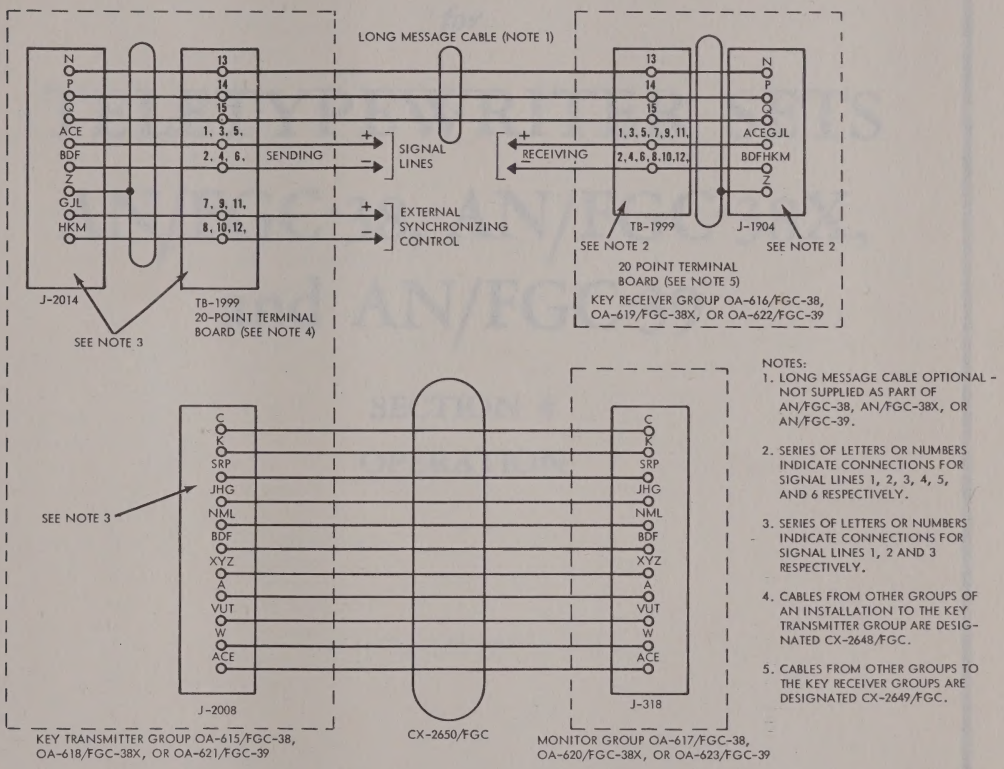

Figure 3—23. Teletypewriter Set AN/FGC-38, AN/FGC-38X, or AN/FGC-39, Interconnecting Diagram

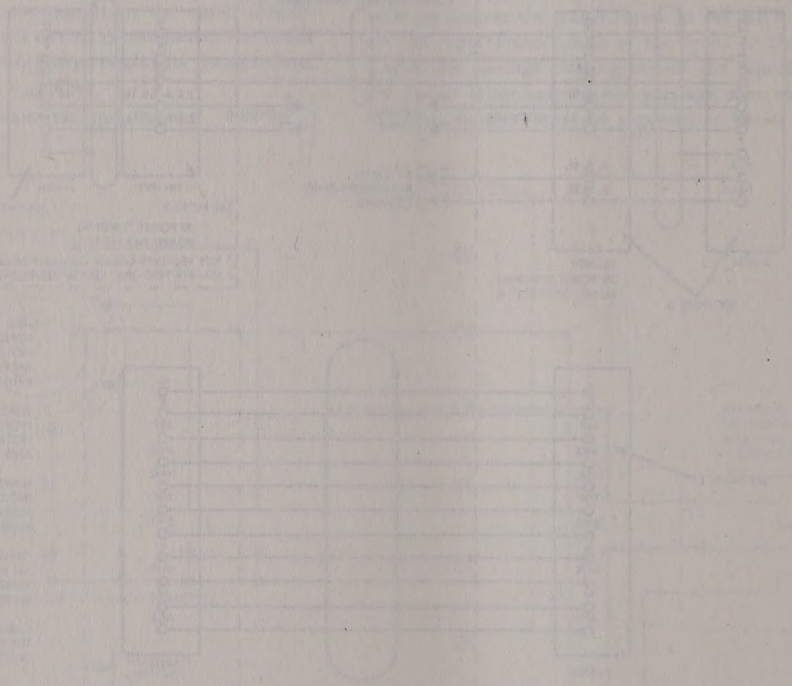

INSTRUCTION BOOK

for

TELETYPEWRITER SETS AN/FGC-38, AN/FGC-38X, and AN/FGC-39

SECTION 4

OPERATION

INSTRUCTION BOOK

for

TELETYPEWRITER SETS AN/FGC-38, AN/FGC-38X, and AN/FGC-39

SECTION 4

OPERATION

TABLE OF CONTENTS

Paragraph		Page
1.	Introduction	4-0
a.	General	4-0
b.	Receiver Group OA-616/FGC-38, OA-619/FGC-38X, or OA-622/FGC-39	4-0
c.	Transmitter Group OA-615/FGC-38, OA-618/FGC-38X, or OA-621/FGC-39	4-0
d.	Monitor Group OA-617/FGC-38, OA-620/FGC-38X, or OA-623/FGC-69	4-5
2.	Capabilities and Limitations	4-5
a.	Receiver Group	4-5
b.	Transmitter Group	4-5
c.	Monitor Group	4-5
3.	Operation of Each Function	4-5
a.	Installing Tapes and Ribbons	4-5
	(1) Installing Reperforator Ribbons	4-5
	(2) Installing Receiver Message Tape	4-6
	(3) Installing Monitor Tape	4-9
b.	Installing Number Tapes	4-9
c.	Starting the Equipment	4-9
d.	Operating Procedure for Teletypewriter Set	4-9
e.	Deleting a Number	4-10
f.	Transmitting Long Messages	4-10
g.	Rerunning Messages	4-10
h.	Number Delete for Long Message or Rerun	4-11
i.	Replacing Tape in Receiver Group	4-11
j.	Replacing Ribbon in Receiver Group	4-11
k.	Replacing Tapes in Monitor Group	4-12
l.	Replacing the Ribbon in Monitor Reperforator	4-12
m.	Changing Ribbon in Time Stamp	4-13
n.	Transmitting to the Monitor Group on Open Line	4-13
o.	Patching at the Key Transmitting Group	4-13
p.	Patching at the Key Receiver Group	4-14
4.	Summary of Operation	4-14
a.	Installing Number Tapes	4-14
b.	Starting the Equipment	4-14
c.	Operating Procedures	4-14
d.	Deleting a Number	4-16
e.	Transmitting Long Messages	4-16
f.	Rerunning Messages	4-16
g.	Number-Delete on Long Message	4-16
h.	Number-Delete on Rerun	4-16
i.	Changing Reperforator Ribbons	4-16
j.	Changing Receiver Message Tape	4-24
k.	Changing Monitor Tape	4-24
l.	Changing Ribbon in the Time Stamp	4-24
m.	Transmitting to the Monitor Group on Open Line	4-25
	(1) Battery Supplied Locally	4-25
	(2) Battery Supplied Remotely	4-25

LIST OF ILLUSTRATIONS

Figure	Title	Page
4-1	Receiver Group OA-616/FGC-38, OA-619/FGC-38X, or OA-622/FGC-39, Front View	4-1
4-2	Transmitter Group OA-615/FGC-38, OA-618/FGC-38X, or OA-621/FGC-39, Front View	4-2
4-3	Transmitter Group, Rear View	4-3
4-4	Monitor Group OA-617/FGC-38, OA-620/FGC-38X, or OA-623/FGC-39, Front View	4-4
4-5	Installing Reperforator Ribbons	4-6
4-6	Installing Receiver Reperforator Tape	4-7
4-7	Installing Monitor Reperforator Tape	4-8
4-8	Transmitter Group, Rear View, Changing the Number Tape	4-15
4-9	Teletypewriter Set, Starting Procedure	4-17
4-10	Teletypewriter Set, Operating Procedure	4-19
4-11	Teletypewriter Set, Long Message Operations	4-21
4-12	Teletypewriter Set, Rerunning Message Operations	4-23

SECTION 4
OPERATION

1. INTRODUCTION.

a. GENERAL.—Teletypewriter Set AN/FGC-38, AN/FGC-38X, or AN/FGC-39 is a semiautomatic tape relay equipment and performs three basic functions. The first function of the equipment is to receive automatic telegraph signals from distant points and record these signals on a chadless perforated tape with the message typed over the perforations. The second function of the equipment is to produce automatic telegraph signals from perforated tape and to transmit these signals to distant points. The third function of the equipment is to automatically monitor all transmitted messages and numbers for storage.

b. RECEIVER GROUP OA-616/FGC-38, OA-619/FGC-38X, OR OA-622/FGC-39.—The receiver group is composed, basically, of three reperforators, each of which is associated with a separate incoming signal line. (See figure 4-1.) A fourth reperforator is also included which is used as a spare. An incoming message, in the form of automatic telegraph signals, is applied to a reperforator. The reperforator records the message on a tape in two ways; first, by perforating, and second, by typing the message on the tape. The received message is then fed out of the reperforator through a slot in the front of the receiver cabinet. The entire receiving operation is fully automatic.

Two visual indicators are provided to enable an operator to determine that the supply of tape for a reperforator is nearly exhausted. The first visual indicator is the TAPE OUT lamp that lights when a roll of tape is nearly exhausted, and the second is the tape itself which is red as it approaches the end of the roll. Four TAPE OUT lamps (two front and two rear) are provided, two (one front and one rear) for each half of the receiver cabinet. The controls on the rear panel are in parallel with those on the front panel. The TAPE OUT lamp, located on the left side of the front panel, lights when either reperforator in the left half of the receiving cabinet is running out of tape. The TAPE OUT lamp, located on the right side of the front panel, lights when any reperforator in the right half of the receiving cabinet is running out of tape. The specific reperforator that is running out of tape, of the three possible indicated by the TAPE OUT lamp, is identified by the red tape coming out of that reperforator. When the exhausting roll has been identified, a new roll of tape must be inserted after the end of a message.

Since replacing the roll of tape in a particular operating reperforator may result in the loss of messages, a spare reperforator is provided in each receiver group. The spare reperforator in this instance becomes the operating reperforator while the new roll of tape is being placed on the reel in the tape container. The spare reperforator is placed in the circuit in order that any incoming message may be recorded with no interruption in the service. To accomplish this, a jack panel on the front and rear of the receiver cabinet and a patch cord are provided. Removal of the patch cord from the jack panel on the front or rear of the cabinet removes the spare reperforator from the line.

In the event that an incoming message is interrupted, due to a line failure, an OPEN LINE alarm lamp lights to warn the operator of the interrupted condition. One OPEN LINE alarm lamp is provided for each reperforator. The OPEN LINE alarm lamp remains lighted even after service is restored and is extinguished only by depressing the RESET button associated with the lighted lamp. The RESET buttons must also be depressed by the operator each time the equipment is turned on after shut-down. An OPEN LINE alarm lamp is also provided for the spare reperforator and must be extinguished by depressing that RESET button after the patching cord has been removed from the jack panel.

All the controls and jacks mentioned above are duplicated at the rear of the receiver group. The sliding trays are assembled to be pulled out from the rear of the cabinet, but they may be changed to be pulled out from the front instead of from the rear. There is space for six operating positions in each receiver group; four reperforators are supplied, thus leaving provision for two more reperforators in the cabinet when additional shelves are added. A transmitter circuit jack and a power receptacle located on the front of the cabinet are used for long message operation (optional) and are described in the following paragraph.

c. TRANSMITTER GROUP OA-615/FGC-38, OA-618/FGC-38X, OR OA-621/FGC-39.—The transmitter group is composed basically of six message distributor-transmitters and two bases, and three numbering distributor-transmitters and a base. (See figure 4-2.)

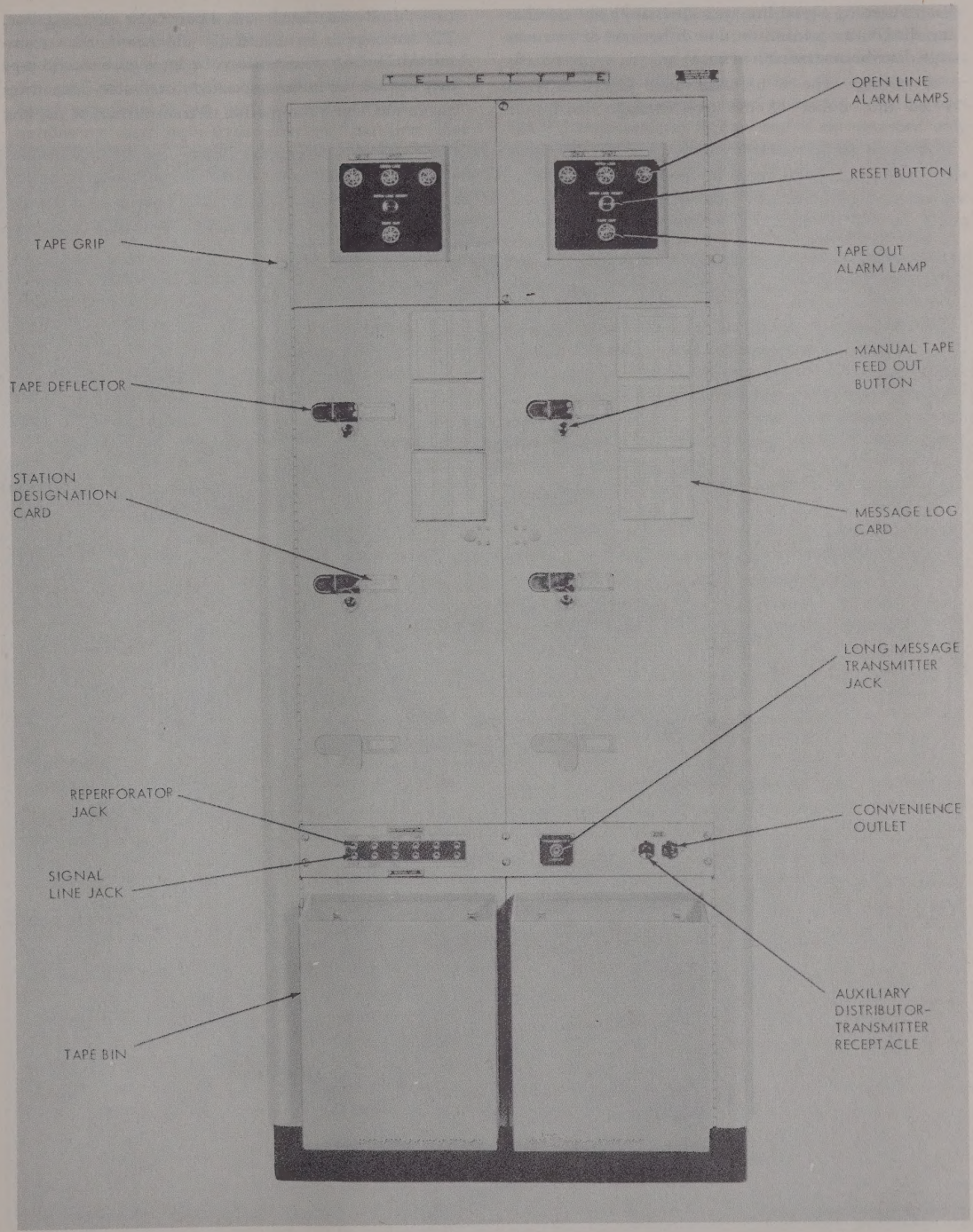

Figure 4–1. Receiver Group OA-616/FGC-38, OA-619/FGC-38X, or OA-622/FGC-39, Front View

Each outgoing signal line uses alternately one numbering distributor-transmitter and either one of two message distributor-transmitters.

A message tape to be transmitted is manually inserted into either of the two message distributor-transmitters associated with a particular outgoing line. The message is automatically numbered, then transmitted. During transmission of a message, a second tape may be inserted in the associated distributor-transmitter not in use. Upon completion of transmission of the first

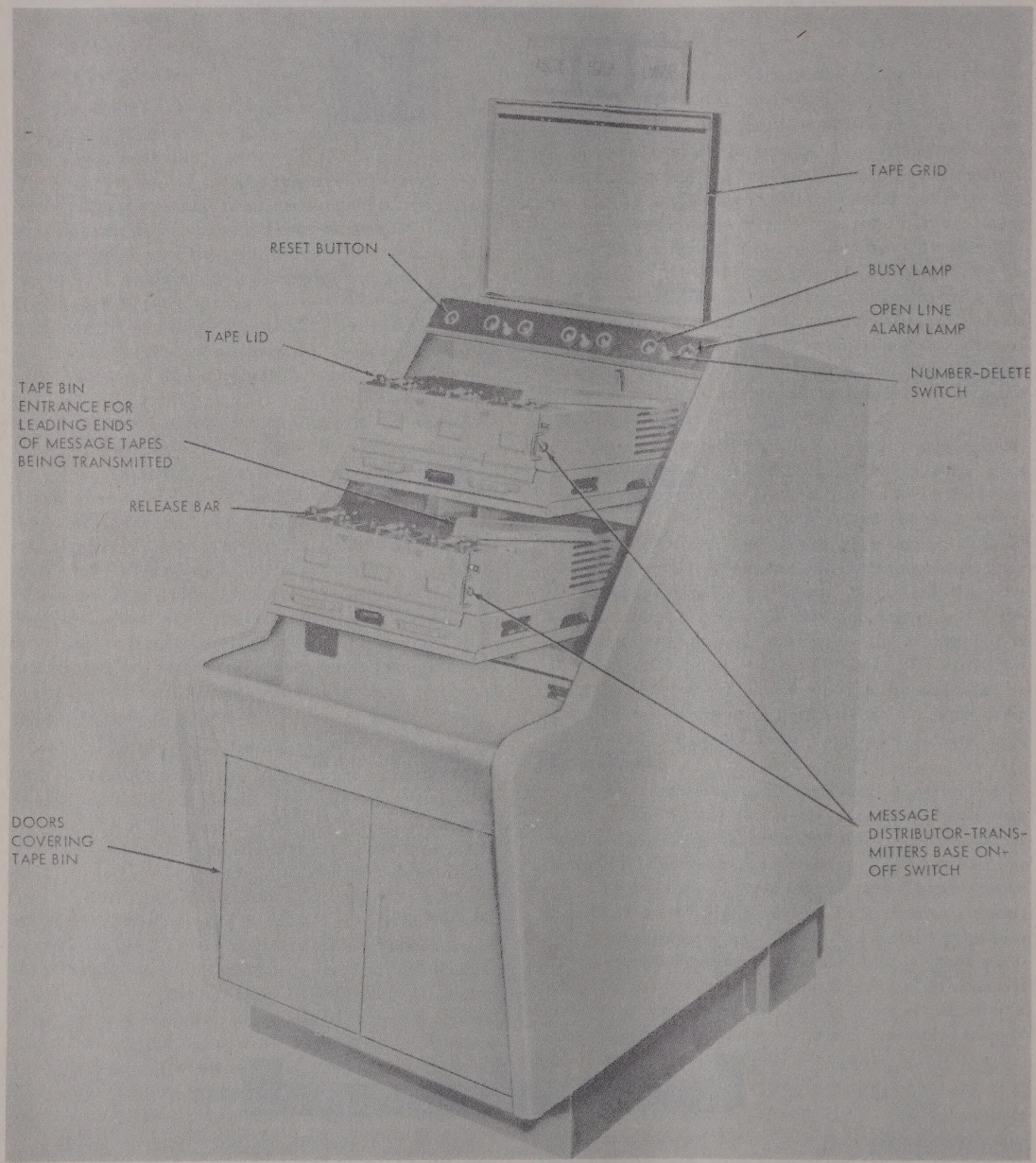

Figure 4—2. Transmitter Group OA-615/FGC-38, OA-618/FGC-38X, or OA-621/FGC-39, Front View

message, the message in the second distributor-transmitter is automatically numbered and transmitted. Thus messages may be sent continuously with no loss of time. All messages on each particular line are numbered according to the number tape inserted in the numbering distributor-transmitter on that line. (See figure 4-3.) If it is desired to transmit a message without a number, the NUMBER-DELETE switch for that line is held in the DELETE position while starting the message. The NUMBER-DELETE switches are located on the front panel of the transmitter cabinet, directly above the message distributor-transmitters. A channel BUSY lamp on the front of the transmitter cabinet is provided for each outgoing line. During the transmission of a message over a given line, the channel BUSY lamp remains lighted and is extinguished only when no message is being transmitted on that line.

When transmission is interrupted due to an open outgoing line, the distributor-transmitter carrying the message stops automatically and an OPEN line alarm

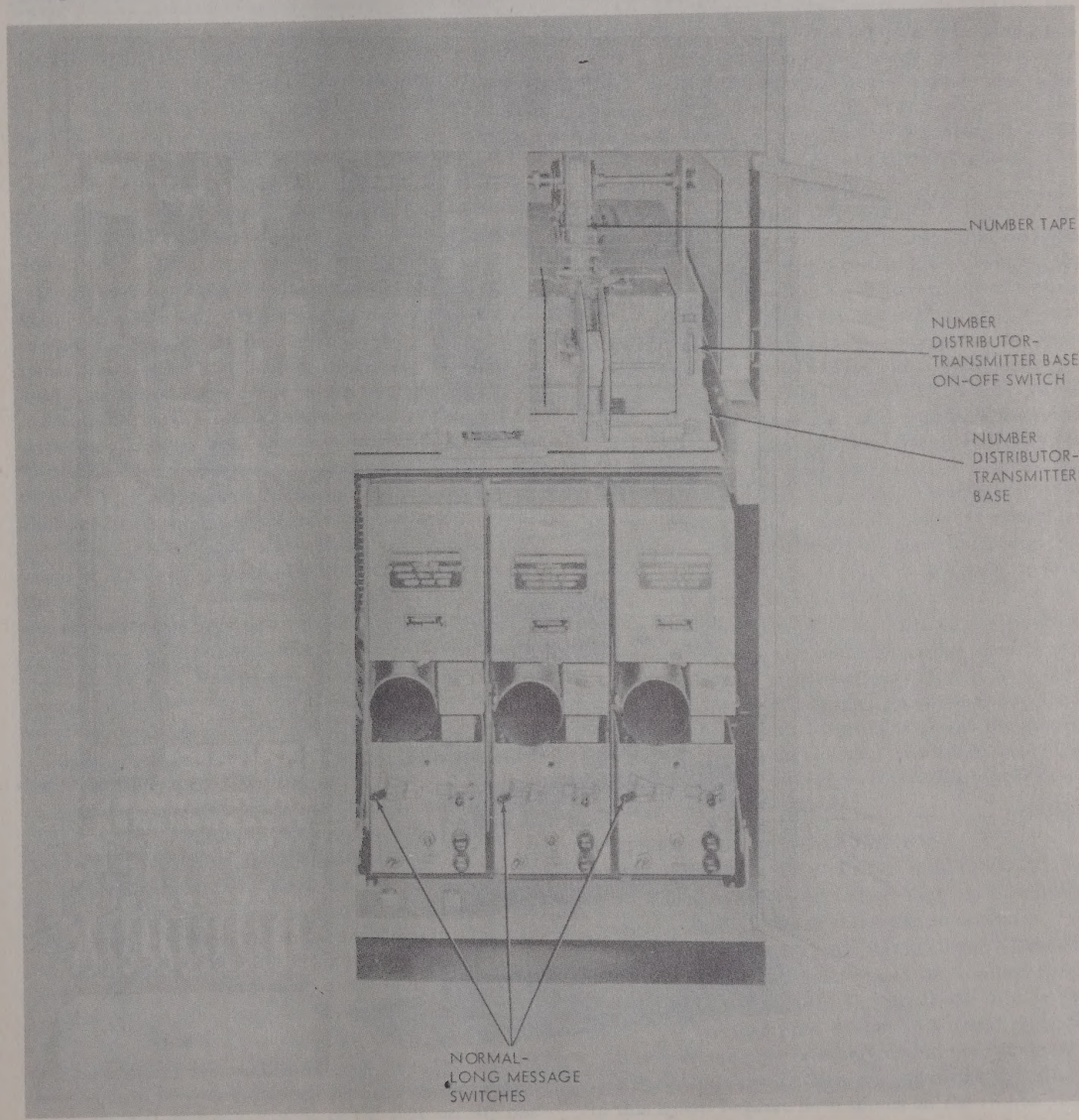

Figure 4–3. Transmitter Group, Rear View

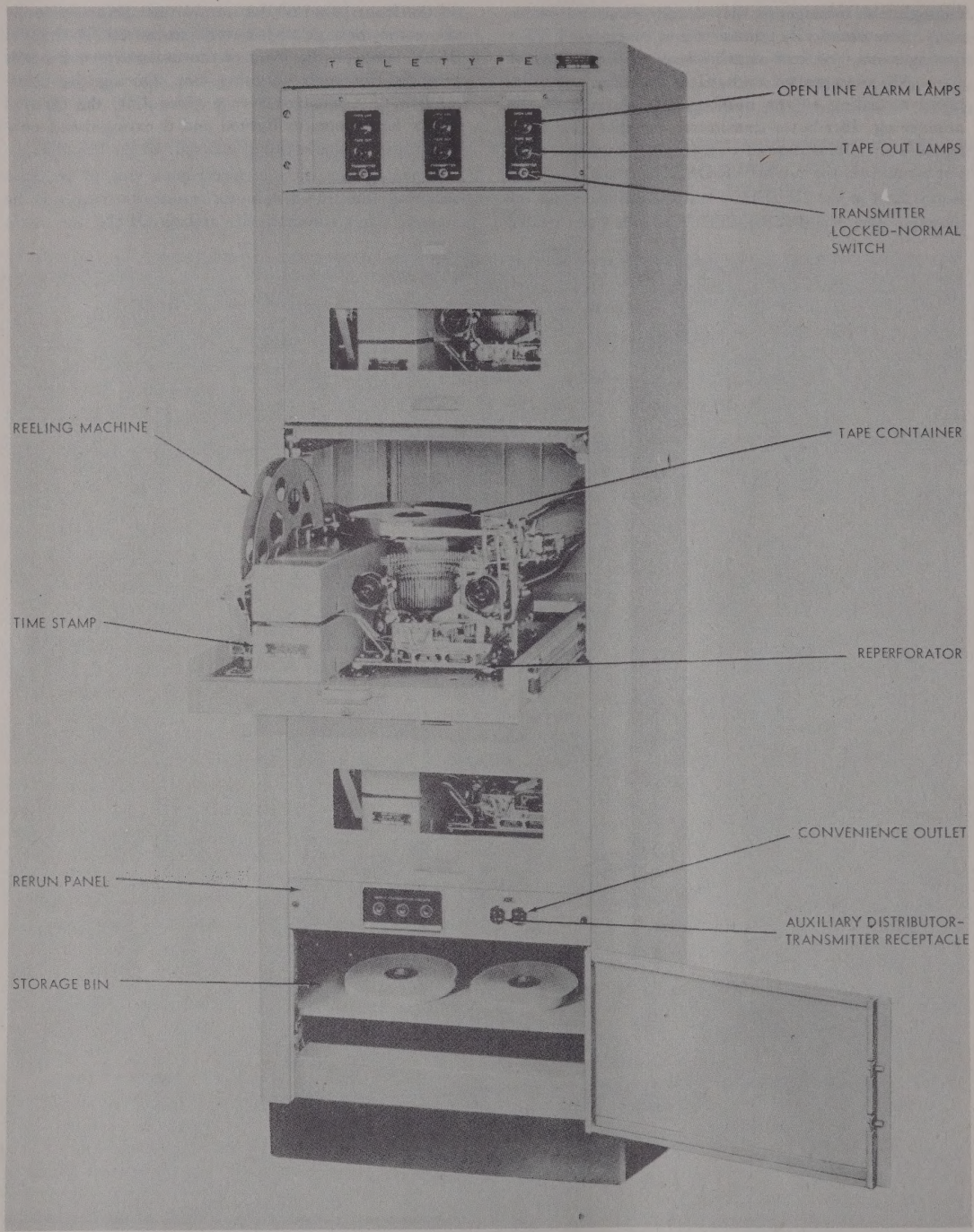

Figure 4—4. Monitor Group OA-617/FGC-38, OA-620/FGC-38X, or OA-623/FGC-39, Front View

lamp, associated with that line, lights. After the line has been restored, the RESET button must be depressed to extinguish this lamp. The message distributor-transmitter then automatically resumes normal operation at that point where transmission stopped.

If the equipment is wired for long message facilities, a long message being received may be transmitted directly from the receiver group without tearing the tape by connecting an auxiliary distributor-transmitter unit, specially wired with a three-conductor plug, at the receiver group and inserting the message tape directly into the auxiliary unit. In this operation, the NORMAL-LONG MESSAGE switch on the transmitter group must be placed in the LONG MESSAGE position. This switch conditions a lockout circuit associated with the message distributor-transmitters on that line and, at the end of the running message, the auxiliary unit takes over and transmits the long message. The numbering of the long message may be deleted by operating the NUMBER-DELETE switch on the relay group for that line.

d. MONITOR GROUP OA-617/FGC-38, OA-620/FGC-38X, OR OA-623/FGC-39.—The monitor group is composed basically of three reperforators, three time stamps, and three tape reeling machines. (See figure 4-4.) The reperforator, time stamp, and tape reeling machine on each level of the cabinet are associated with the message and numbering distributor-transmitters of a particular outgoing line.

A copy of each transmitted message and its associated number is produced by a reperforator in the monitor group and is stored on a reel by the tape reeling machine. The time stamp marks the monitor tape with the year, month, day, hour, and minute once every minute so long as messages are being transmitted.

The reeling machine pulls the reperforated tape through the time stamp as it comes out of the reperforator. It is motor driven and clutch controlled so that winding occurs only when the tape is slack.

TAPE OUT and OPEN LINE alarm lamps are provided on the front of the monitor cabinet and operate as previously described for the receiver group. The OPEN LINE alarm lamp is extinguished by pressing the RESET button on the transmitter group.

Messages may be rerun from the monitor tape copy by using a specially wired auxiliary distributor-transmitter unit. Provisions are made in the monitor cabinet for rerun messages by RERUN jacks (one for each outgoing line), into which the auxiliary unit may be plugged. Any jack, when utilized, locks the message distributor-transmitter on that line at the end of the running message and allows the auxiliary unit to take over the function of the message distributor-transmitter.

In case it is necessary to change the tape on any one of three lines in the monitor group, the TRANSMITTER LOCKED-NORMAL switch is placed in the LOCKED position. The switch stops the distributor-transmitters from transmitting at the end of the running message so that the tape may be changed without any loss of monitoring. Returning the switch to the NORMAL position allows the message distributor-transmitters to resume operation.

2. CAPABILITIES AND LIMITATIONS.

a. RECEIVER GROUP.—The receiver group as supplied is capable of receiving three messages simultaneously and recording these messages at a preset rate of 60 words per minute. Changing the recording speed to 75 or 100 (experimental) words per minute involves mechanical changes in the reperforator only. The receiver group is designed to receive either polar or neutral signals, as preset by the POLAR-NEUTRAL switch located on the receiving relay group. This switch is locked in a set position.

b. TRANSMITTER GROUP.—The transmitter group as supplied is capable of transmitting messages at a preset rate of 60 words per minute. Changing the transmitting speed to 75 or 100 (experimental) words per minute involves mechanical changes in the message distributor-transmitters and the bases. The transmitter group is designed to send either polar or neutral signals, as preset by the POLAR-NEUTRAL switch located on the transmitting relay group. This switch is locked in a set position. Two message distributor-transmitters transmit consecutively over a given line without loss of time. Each distributor-transmitter transmits manually inserted, perforated tape. One numbering distributor-transmitter on each outgoing line utilizes a numbered tape for inserting a number prior to the transmission of each message.

c. MONITOR GROUP.—The monitor group records all transmitted messages and stamps the monitor tape once every minute with the year, month, day, hour, and minute. Messages recorded by the monitor group may be retransmitted, if required, through the message distributor-transmitters in the transmitter group or through a specially wired auxiliary distributor-transmitter at the monitor group.

3. OPERATION OF EACH FUNCTION.

a. INSTALLING TAPES AND RIBBONS.—The receiver and monitor tapes and ribbons are installed or changed according to the following instructions.

(1) INSTALLING REPERFORATOR RIBBONS.—The reperforator ribbons should be installed before the machine is operated. To install the ribbon (see figure 4-5), remove both ribbon spools and the worn ribbon from the reperforator. Unwind the ribbon from one of the spools and attach one end of the new ribbon to this spool. Replace both spools on the ribbon spool shafts with the ribbon unwinding from the bottom of

both spools, passing over the ribbon rollers, through the slots in the ribbon reverse arms, and under the center loop of the ribbon guide.

(2) INSTALLING RECEIVER MESSAGE TAPE. The message tape should be installed before the machine is operated (see figure 4-6). Place the new roll of tape in the tape container. The new roll of tape should unwind up and toward the right side of the cabinet. Feed the tape through the guides, through the tape chute and the punch block. Lift the feed wheel tape

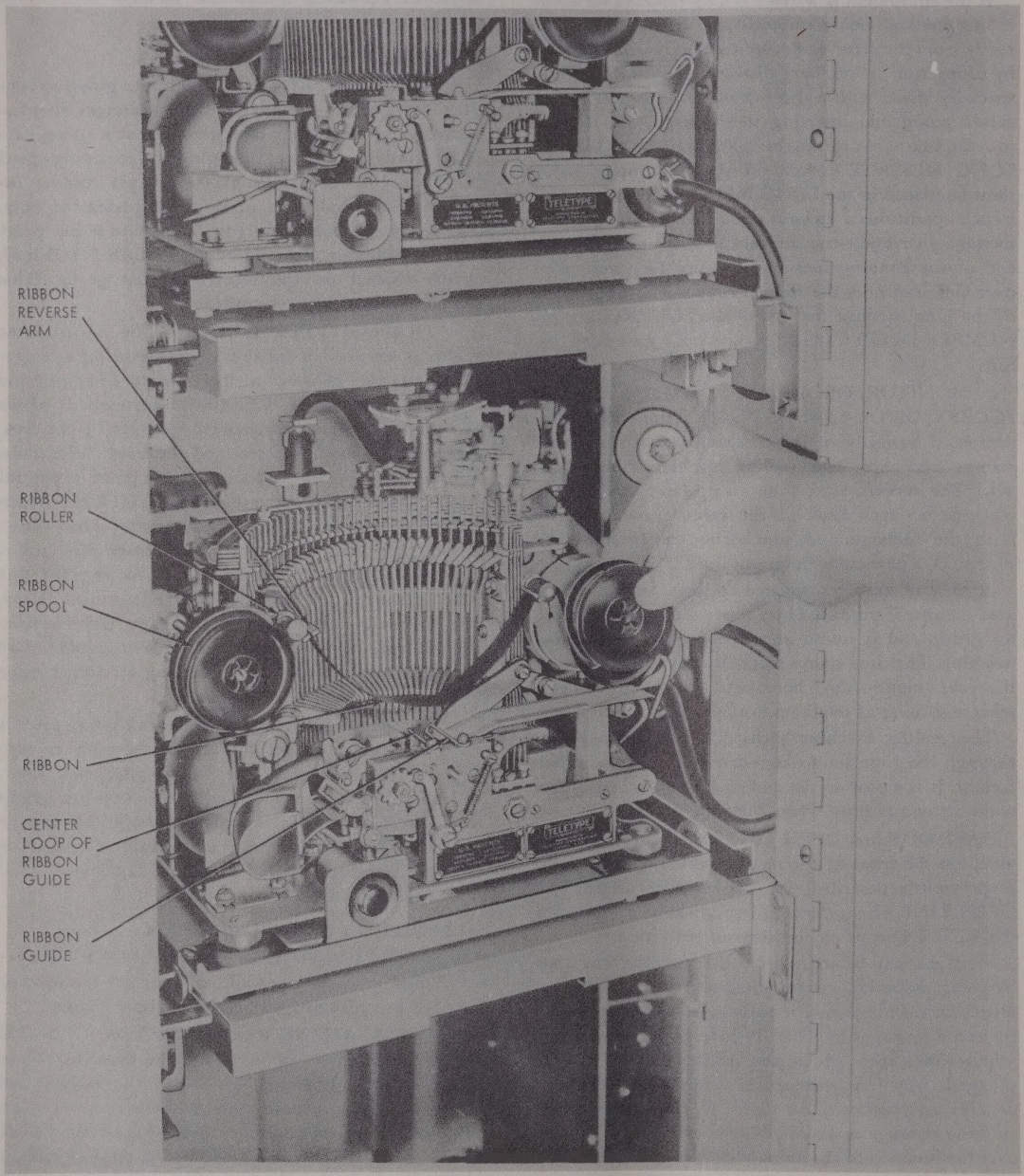

Figure 4—5. Installing Reperforator Ribbons

spring, place the tape over the feed wheel, and let the tape spring spring back into place over the feed wheel. Operate the tape feed-out lever to feed out a short amount of tape to insure proper feeding. Take the slack

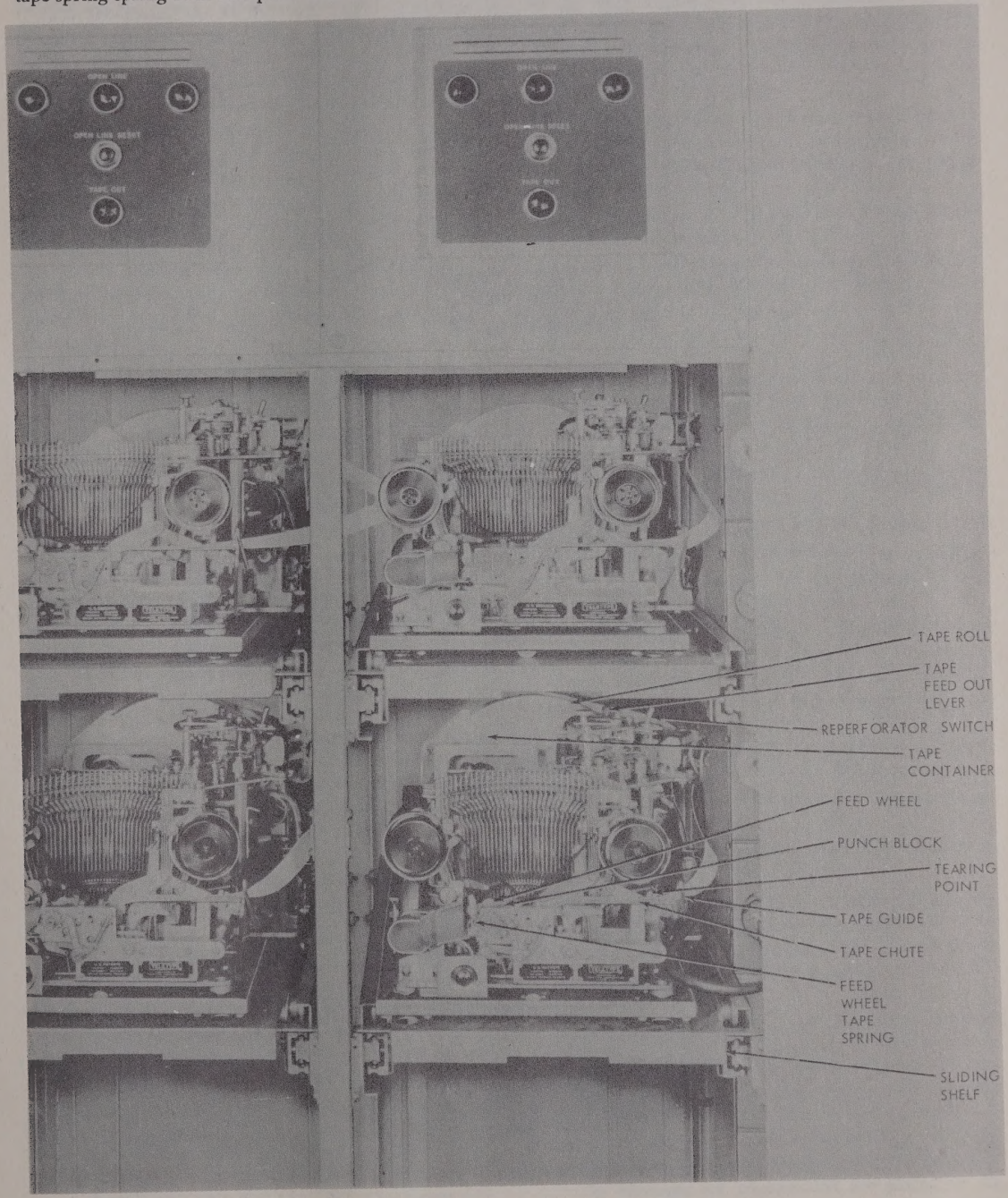

Figure 4—6. Installing Receiver Reperforator Tape

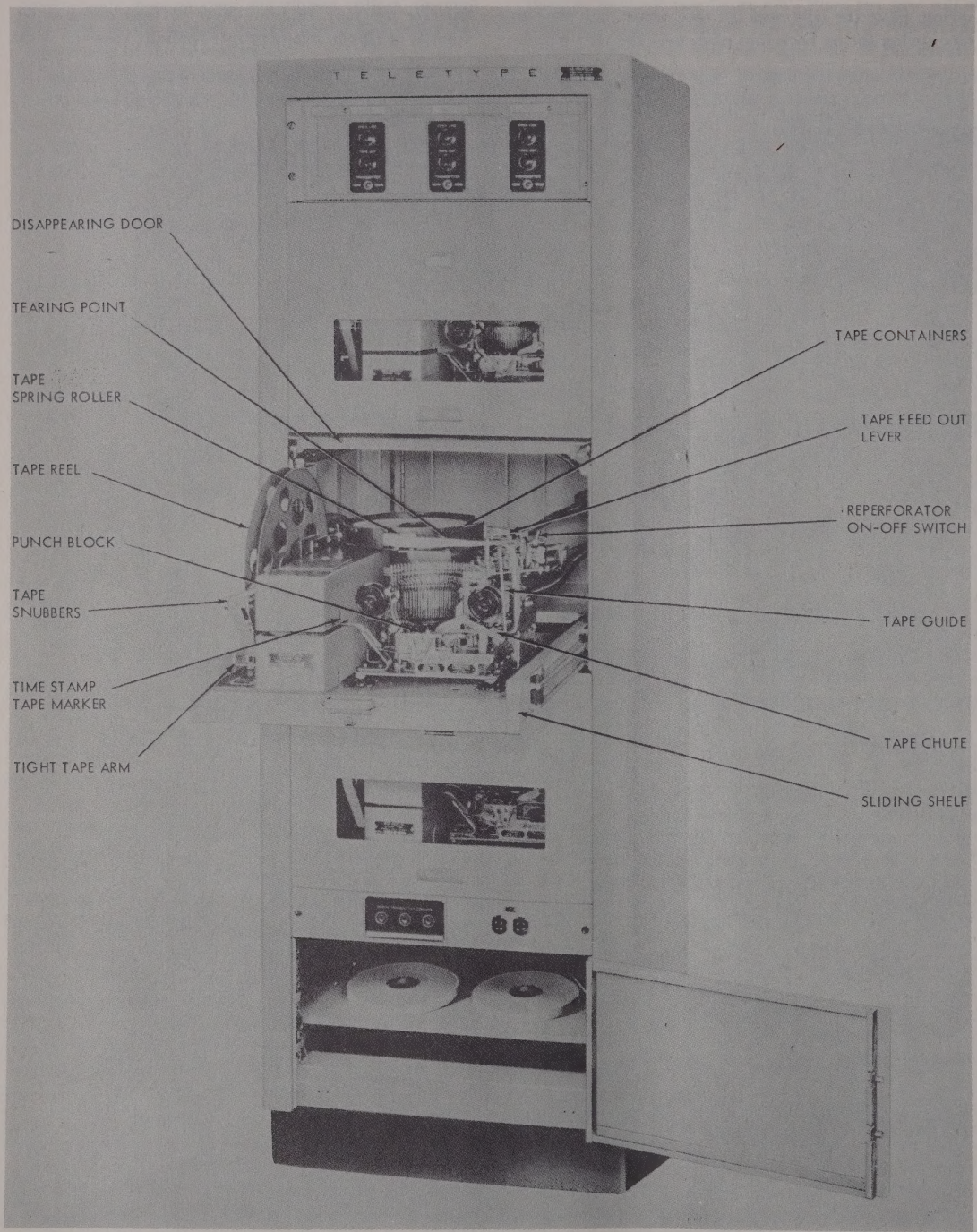

Figure 4–7. Installing Monitor Reperforator Tape

out of the tape by winding back onto the roll in the tape container.

(3) INSTALLING MONITOR TAPE.—The tape should be installed in the monitor reperforators before the machine is operated (see figure 4-7).

(*a*) Place the new roll in the tape container with the leading edge of the tape coming out of the roll in a counterclockwise direction.

(*b*) Pass the tape on the outside of the tape spring roller, over the top of tape guide, then down under the bottom of the tape guide, through the tape chute and punch block, and over the feed wheel. Lift the tape feed wheel spring and place the tape between the spring and the feed wheel. Continue the tape through the time stamp at the place where the time stamp cover is marked with a white line, and to the reeling machine.

(*c*) Thread the tape through the tight tape arm and through the tape snubbers on the reeling machine, following the line around the snubbers. Fasten the end of the tape to the reel. Operate the tape feed-out lever to feed out a short amount of tape to insure proper feeding.

(*d*) Take up any slack in the tape by winding the tape on the tape reel. Place the reel in the rear notches of the reeling machine.

b. INSTALLING NUMBER TAPES.—A number tape is to be provided for each outgoing line. Once each day the number tape must be inserted or reset according to the following procedure:

(1) Wind the number tape clockwise on the rewind reel starting with the high-numbered end and with the typing on the inside of the reel. Wind the tape under tension so that the tape is not loose on the reel.

(2) Position the snubber assembly to the rear.

(3) Pass the beginning end of the tape (printed side now facing upward) over the slack arm and the stationary snubbers.

(4) Place the end of the tape in the slot of the wind reel. Rotate the reel by hand two revolutions.

(5) Return the snubber assembly to the operating position and latch it in place.

(6) Press the release bar down and to the rear on that numbering distributor-transmitter. Position the tape for transmission of the next desired number and latch the tape lid down. Restore the release bar. Numbering transmission is now automatic.

(7) To rewind the tape, raise the tape lid, position the snubbers to the rear, and carefully and steadily rewind the tape by means of the crank on the rewind reel.

c. STARTING THE EQUIPMENT. *(See figure 4-9).* —The following procedure outlines the necessary steps to operate the equipment when first installed or after shutdown.

(1) Place the d-c power supply switches in the receiver group in the ON position. There is a switch on the right wireway near the bottom and one on the d-c power supply. Normally only the switch on the wireway is used.

(2) Place the motor switch on the back of each operating reperforator in the receiver group in the ON position. The spare reperforator switch should be left in the OFF position.

(3) Depress the RESET buttons to extinguish the OPEN LINE alarm lamps.

(4) Place the d-c power supply switches in the transmitter group in the ON position. There is a switch on the wireway near the top and one on the d-c power supply. Normally only the switch on the wireway is used.

(5) Place the switches on the three distributor-transmitter bases in the ON position.

(6) Depress the RESET button to extinguish the OPEN LINE alarm lamps.

(7) Place the NORMAL-LONG MESSAGE switches in the NORMAL position.

(8) Place the NUMBER-DELETE switches on the relay group in the NUMBER position.

(9) Place the motor switch on the back of each reeling machine in the ON position.

(10) Place the motor switch on each reperforator in the monitor cabinet in the ON position.

(11) Place the TRANSMITTER LOCKED-NORMAL switches on the monitor cabinet in the NORMAL position.

(12) Check POLAR-NEUTRAL switches on both sending and receiving relay groups for proper setting.

(13) Check line current in transmitter group. See Section 3, paragraph 3*b*(4).

(14) Check setting of time stamp. See Section 3, paragraph 3*c*(4).

d. OPERATING PROCEDURE FOR TELETYPEWRITER SET.—The following procedure outlines the steps to operate the equipment under normal conditions. The exact procedure may vary with the individual office.

(1) Incoming messages are reproduced on tape and fed out of the reperforators at the front of the receiver cabinet. Tear off the completed message tape where the letters combinations are perforated and hang the message under the tape grip located on either side of the receiver cabinet. Put the beginning of the message under the grip.

(2) Messages for transmission are placed in the proper slot in the grid on top of the transmitter cabinet

so that they protrude a few inches out the front. Care must be taken in placing the message tape in the grid slot. Since this is chadless tape, make certain that the *start-of-message* end of the tape is inserted in the grid. This is important to prevent the tape from jamming or tearing in the slot as it is withdrawn for transmission.

(3) Pull tape through slot in tape grid from front of grid.

(4) On the designated message distributor-transmitter, depress the release bar and push it backward until it locks in place.

(5) Insert the tape in the tape guide on the proper message distributor-transmitter and slide the tape under the tape lid until the first printed character is in line with the forward edge of the tape lid. If difficulty is experienced in inserting a tape into the message distributor-transmitter, raise the tape lid and place the tape (typed side up) in the tape guide so the feed pins on the feed wheel engage the feed holes in the tape. Return the tape lid to its latched position.

(6) Restore the release bar by moving it towards the front; transmission is now automatic.

(7) While the message is being transmitted, insert another message in the tandem distributor-transmitter and restore its release bar. When the first message is completed, the second distributor-transmitter takes over the circuit and automatically transmits the second message.

e. DELETING A NUMBER.—To delete a number from a message, hold the NUMBER-DELETE switch on the front panel in the DELETE position until transmission of the message has begun; then release the switch. This operation will delete the number from that message only.

f. TRANSMITTING LONG MESSAGES.—When it is necessary to transmit a long message while reception is still in progress, proceed with the following steps:

(1) Plug a specially wired distributor-transmitter into the auxiliary power receptacle on the receiver group panel and plug the signal cord into the TRANSMITTER CIRCUIT jack.

(2) Insert the start of the long message into the specially wired distributor-transmitter and turn the switch on the unit to the ON position. Make sure that the message tape is free to travel through the specially wired distributor-transmitter.

(3) Go to the transmitter group associated with the outgoing line on which the message is to be sent and place the proper NORMAL-LONG MESSAGE switch in the LONG DISTANCE position.

(4) The long message is transmitted as soon as the message being sent at the transmitter group is completed. The long message is preceded by a message number from the numbering distributor-transmitter if message numbering is used.

(5) When the long message is completed, turn off the switch on the specially wired distributor-transmitter. Also place the NORMAL-LONG MESSAGE switch in the NORMAL position. This restores the circuit to normal operation.

(6) Remove the specially wired distributor-transmitter cords from the receiver panel.

Notice to Operator

During a rerun from the monitor group, placing the NORMAL-LONG MESSAGE switch in the LONG MESSAGE position will interrupt the rerun message. Wait until the rerun message has been completed before operating the NORMAL-LONG MESSAGE switch.

g. RERUNNING MESSAGES.—To rerun a message with a number preceding the rerun, proceed with the following steps.

(1) Plug the specially wired distributor-transmitter power cord into the receptacle on the rerun panel.

(2) If a pilot tape is used, proceed with the following steps.

(*a*) Prepare the pilot tape and insert it into the specially wired distributor-transmitter.

(*b*) Place the ON-OFF switch on the specially wired distributor-transmitter in the ON position.

(*c*) Pull out the sliding shelf on which is mounted the tape reeling machine that has the reel with the message to be rerun. Move the reel to the forward notches of the machine so that the reel is free to rotate. Remove the tape from the snubbers and unwind the reel by pulling the tape until the desired message is located. Do not snarl the tape.

(*d*) Insert the plug of the signal cord of the specially wired distributor-transmitter into the proper jack on the RERUN panel. The unit automatically transmits as soon as the message from the distributor-transmitter on that line is completed.

(*e*) When the pilot tape has completed its transmission, place the switch on the specially wired distributor-transmitter to the OFF position. Insert the start of the rerun message and place the switch of the auxiliary distributor-transmitter to the ON position. The unit transmits the message automatically.

(3) If no pilot is used, proceed with the following steps.

(*a*) Locate the start of the rerun message on the monitor reel by placing the reel on the forward notches of the reeling machine so that the reel is free to rotate and unwind the tape until the message is found.

(*b*) Insert the start of the message in the specially wired distributor-transmitter and place the switch in the unit to the ON position.

(*c*) Insert the plug of the signal cord of the specially wired distributor-transmitter into the proper jack on the rerun panel. The unit automatically transmits as soon as the message from distributor-transmitter on that line is completed.

(4) At the end of the message, place the switch on the specially wired distributor-transmitter to the OFF position, pull the signal cord out of the RERUN panel and pull the power cord from the auxiliary receptacle. Transmitter and monitor group operation is now restored to normal.

h. NUMBER DELETE FOR LONG MESSAGE OR RERUN.—To delete a number on a long message or rerun, perform the following:

(1) On long messages, position the NUMBER-DELETE switch on the transmitting relay group to DELETE at the same time the LONG MESSAGE switch is positioned to LONG MESSAGE. Restore both switches at same time after long message is completed.

(2) On rerun message, position the NUMBER-DELETE switch on the relay group to DELETE position before inserting signal plug of specially wired distributor-transmitter into TRANSMITTER CIRCUIT jack. The switch may be restored to normal position any time after the start of the rerun message. Normal transmission will not take place until the NUMBER-DELETE switch is restored to NUMBER position.

i. REPLACING TAPE IN RECEIVER GROUP.—When it is necessary to place a new roll of tape in the TAPE CONTAINER, proceed as follows:

(1) Insert one end of the patching cord into the REPERFORATOR jack of the spare reperforator. The reperforator will start to operate as if on open line and the OPEN LINE alarm lamp will indicate an open line.

(2) Insert the other end of the patching cord into the SIGNAL LINE jack of the operating position. This must always be done after the first end is inserted into the REPERFORATOR jack of the spare or an open line will prevail until both plugs are inserted. Reset the OPEN LINE alarm for the spare position. Both reperforators will now be receiving the message.

(3) Watch the operating reperforator for the end of the message in process at the time the spare reperforator was inserted. As soon as the end of the message is received, tear off the partial message received on the spare reperforator and discard. Open the door covering the operating position, turn the power switch on the operating reperforator to the OFF position, and withdraw the shelf from the cabinet.

(4) Tear the tape on the old roll near the right-hand end of the tape chute that feeds the tape into the reperforator. Remove the tape out alarm plug from its receptacle. The rotating tray can be rotated by releasing the holding stud (by pulling down on the thumb nut located on the underside of the sliding shelf in the right front area). This will make the tape more accessible if it is being replaced from the rear. Turn on the power to the reperforator and clear the tape by operating the tape feed-out lever located next to the range scale. Turn the power off.

(5) Replace the old tape roll in the TAPE CONTAINER with the new tape roll unwinding up and toward the right side of the cabinet. (See figure 4-6.) Feed the tape through the tape guide, through the tape chute, punch block, and feed wheel of the reperforator.

(6) If the rotating tray was rotated, restore it to its operating position. Replace the tape out alarm plug. Take the slack out of the tape by rewinding it on the roll. Turn the power on and check tape feeding. Restore the sliding shelf to its operating position and close the door.

(7) Watch for the end of the message being received. As soon as the end of the message has been received, pull out the plug of the patching cord from the SIGNAL LINE jack. This plug must be pulled out first to prevent an open line condition. Pull out the second plug. This will shut off the power to the spare reperforator. Reset OPEN LINE alarm on spare position.

j. REPLACING RIBBON IN RECEIVER GROUP.—When it is necessary to replace the ribbon, proceed as follows:

(1) Insert one end of the patching cord into the REPERFORATOR jack of the spare reperforator. The reperforator will start to operate as if on open line, and the OPEN LINE alarm lamp will indicate an open line.

(2) Insert the other end of the patching cord into the SIGNAL LINE jack of the operating position. This must always be done *after* the first end is inserted into the REPERFORATOR jack of the spare or an open line will prevail until both plugs are inserted. Reset the OPEN LINE alarm for the spare position. Both reperforators will now be receiving the message.

(3) Watch the operating reperforator for the end of the message so that the spare reperforator will take over on a new and complete message. As soon as the end of the message is received, open the door covering the operating position, turn the power switch on the operating reperforator to the OFF position, and withdraw the shelf from the cabinet.

(4) Remove both ribbon spools and the worn ribbon from the reperforator. Unwind the ribbon from one of the spools and attach one end of the new ribbon to

this spool. Replace both spools on the ribbon spool shafts with the ribbon unwinding from the bottom of both spools, passing over the ribbon rollers, through the slots in the ribbon reverse arms, and under the center loop of the ribbon guide.

(5) If the rotating tray was rotated and the tape out alarm plug removed, restore the tray to its operating position and replace the plug. Take the slack out of the ribbon by rewinding it on the spool. Turn the power on and check ribbon feeding. Restore the sliding shelf to its operating position and close the door.

(6) Watch for the end of the message being received. As soon as the end of the message has been received, pull out the plug of the patching cord from the SIGNAL LINE jack. This plug must be pulled out first to prevent an open line condition. Pull out the second plug; this will shut off the power to the spare reperforator. Reset OPEN LINE alarm on spare position.

k. REPLACING TAPES IN MONITOR GROUP.—When it is necessary to place a new roll of tape in the tape container on top of the reperforator, proceed as follows:

(1) Operate the TRANSMITTER LOCKED-NORMAL switch on the front panel that corresponds to the circuit to be held in the LOCKED position. This stops all transmission from the transmitting set on that line until the switch is restored to the NORMAL position. The message in process at the time of operating the switch is completed before the locking of the circuit takes place.

(2) Pull out the sliding shelf and wait until the reperforator stops operating. It will do so as soon as the message being sent has been completed.

(3) Tear the tape on the old roll near the right-hand end of the tape chute that feeds the tape into the reperforator.

(4) Remove the piece of tape remaining in the reperforator by operating the tape feed-out lever next to the range scale on the reperforator and holding the lever until all the tape has cleared the reperforator.

(5) Replace the used tape roll, but do not discard as it will be needed for the reeling machine reel. The new tape roll should unwind in a counterclockwise direction.

(6) Pass the tape on the outside of the tape tension spring roller, over the top of the tape guide, then down under the bottom of the tape guide, through the tape chute and punch block, through the feed roll, through the left hand tape chute, through the time stamp, and to the tape reeling machine (see figure 4-7).

(7) Whenever the tape roll is replaced, the tape reeling machine should be emptied and the new tape started.

(8) Clean off any lint and dust that has accumulated around the tape chutes, punch block, and feed roll.

(9) Let the tape reeling machine take up all the old tape.

(10) When all the old tape is reeled, lift the tape reel out of the reeling machine and place a piece of tape across the free end so that reeled tape will not unwind.

(11) Pull out the locking plate on the side of the reel that does not have the gear. Pull the two sections of the reel apart, being careful not to damage the reeled tape. The tape will stay with one section.

(12) Remove the reeled tape, with its cardboard insert, from the section of the reel. Label the reeled tape to prevent loss of identity.

(13) Clean the cores on both halves of the reel if necessary, making sure that the springs do not have pieces of tape, lint, or other particles underneath.

(14) Insert the used tape roll that was removed from the reperforator on the core of the section of the reel that has the gear. The used tape roll should still have some tape on it so that the new tape may be attached to it easily. The used tape roll should be inserted so that the tape winds up in a clockwise direction.

(15) Put the two halves of the reel together and place the reel on the forward notches of the reeling machine. Leave about 10 inches of tape unwound.

(16) Take the new tape passing through the time stamp and thread it through the tight tape arm and the tape snubbers. (If more tape is needed, operate the tape feed-out lever on the reperforator.) Fasten the end coming out of the snubbers to the end of the used roll on the reel.

(17) Take up the slack and make sure that the fastened end in the reel is covered with at least one turn of the unbroken tape.

(18) Move the reel to the rear notches of the reeling machine.

(19) Return the TRANSMITTER LOCKED-NORMAL switch to the NORMAL position. Supervise the monitoring for a few minutes to see that everything is operating normally.

(20) Move the sliding shelf back into the cabinet and close the door.

l. REPLACING THE RIBBON IN MONITOR REPERFORATOR.—When it becomes necessary to replace ribbon, proceed as follows:

(1) It is essential that printing on the tape should be easily readable. The ribbon should be replaced before the printing becomes too light.

(2) Operate the TRANSMITTER LOCKED-NORMAL switch as when the tape roll is being changed.

(3) Wait until the reperforator has stopped operating.

(4) To replace a ribbon, remove both ribbon spools and the worn ribbon from the reperforator. Unwind the ribbon from one of the spools and attach one end of the new ribbon to this spool. Replace both spools on the ribbon spool shafts with the ribbon unwinding from the bottom of both spools, passing over the ribbon rollers, through the slots in the ribbon reverse arms, and under the center loop of the ribbon guide (see figure 4-5).

(5) Restore the TRANSMITTER LOCKED-NORMAL switch to the NORMAL position.

m. CHANGING RIBBON IN TIME STAMP.—When it becomes necessary to replace the ribbon, proceed as follows:

(1) Slide out the shelf.

(2) Turn off power to tape reeling machine.

(3) Let tape run to get slack or operate tape feed-out lever on reperforator until tape is slack.

(4) Being careful not to tear the tape, slide the tape out of the time stamp and let the slack tape hang.

(5) Remove the time stamp plug and free the cord from all cable holders.

(6) Pick the front end of the time stamp up to clear the stud and slide the unit forward and off the shelf.

(7) Remove the attaching screw in the top of the cover and remove cover. The ribbon spools are held in position by brackets on the right side frame. These brackets are keyed to fit slots in the side frame and are locked in place with knurled thumb screws.

(*a*) Remove the two ribbon spool bracket thumb screws and remove the ribbon spool brackets, spools, and ribbon.

(*b*) When replacing the ribbon, make sure the spools both wind from the outside. The drive pin in the end of the spool must seat well into the spool drive disk, but the spool itself should be free of any binds.

(*c*) Replace the ribbon spool brackets, making sure they fit into the slots in the side frame. Secure the brackets with the thumb screws and replace the cover.

(8) Slide the stamp back onto the locating studs on the shelf.

(9) Plug power cord into receptacle and place cord in cable holders.

(10) Reset time as per instructions in Section 3, paragraph 3*c*(4).

(11) Place tape in time stamp.

(12) Check tape threading and turn on the power to the tape reeling machine.

(13) Take up all tape slack before sliding shelf back into the cabinet.

(14) Supervise for a few minutes to make sure operation is normal.

n. TRANSMITTING TO THE MONITOR GROUP ON OPEN LINE.—When traffic is heavy and an open line exists on one line in the transmitter group, the incoming messages may be recorded on the monitor tape, then retransmitted when the line is again in operation. To transmit to the monitor group during an open line condition, proceed with the following steps:

(1) If battery is supplied locally, insert an open plug into the CIRCUIT jack at the patch frame. This will close the line at the jack and permit transmission to the monitor.

(2) If battery is supplied remotely, insert a jack, connected to line battery, into the SET jack at the patch frame (observe polarity).

o. PATCHING AT THE KEY TRANSMITTING GROUP.—When the jack strips connected to one end of the transmitter cables are mounted in the patch frame of the KEY TRANSMITTER GROUP, the strips provide a patch board for switching circuits within the installation group. The patch board is used to switch circuits when office conditions demand temporary changes in the established routines. The procedure followed will depend on whether the line battery is supplied locally or remotely.

(1) When the line battery is supplied locally and no external synchronizing control is used, proceed as follows:

(*a*) Place one end of the patch cord into the CIRCUIT jack associated with the transmission line desired. Contacts on this jack provide a closed loop for the local transmitting circuit which is removed from the transmission line selected.

(*b*) Place the other end of the patch cord into the SET jack associated with the local transmitting circuit desired.

(2) When the line battery is supplied remotely and no external synchronizing control is used, proceed as follows:

(*a*) Place one end of the patch cord into the SET jack associated with the local transmitting circuit desired. Contacts on this jack provide a closed loop for the transmission line which is removed from the local transmitting circuit selected.

(*b*) Place the other end of the patch cord into the CIRCUIT jack associated with the desired transmission line.

(3) Additional patching is required following the steps outlined in subparagraph *o.*(1) or *o.*(2) when an external synchronizing control is used with the local transmitters.

(*a*) Place one end of a patch cord into the external synchronizing control CIRCUIT jack associated with the transmission line CIRCUIT jack described above.

(*b*) Place the other end of the patch cord into the external synchronizing control SET jack associated with the local transmitting circuit SET jack described above.

(4) To restore the circuits to normal, reverse the above procedures.

p. PATCHING AT THE KEY RECEIVER GROUP. —When the jack strips connected to one end of the receiver cables are mounted in the patch frame of the KEY RECEIVER GROUP, the strips provide a patch board for switching circuits within the installation group. The patch board is used to switch circuits when office conditions demand temporary changes in the established routines. The procedure followed will depend on whether the line battery is supplied remotely or locally.

(1) When the line battery is supplied remotely, proceed as follows:

(*a*) Place one end of the patch cord into the SET jack associated with the local receiving circuit desired. Contacts on this jack provide a closed loop for the receiving line which is removed from the local receiving circuit selected.

(*b*) Place the other end of the patch cord into the CIRCUIT jack associated with the desired receiving line.

(2) When the line battery is supplied locally, proceed at follows:

(*a*) Place one end of the patch cord into the CIRCUIT jack associated with the receiving line desired. Contacts on this jack provide a closed loop for the local receiving circuit which is removed from the receiving line selected.

(*b*) Place the other end of the patch cord into the SET jack associated with the local receiving circuit desired.

(3) To restore the circuits to normal, reverse the above proceedures.

4. SUMMARY OF OPERATION.

a. INSTALLING NUMBER TAPES. *(See figure 4-8.)*

(1) Wind the number tape clockwise on the rewind reel starting with the high-numbered end and with the typing on the inside of the reel.

(2) Position the snubber assembly to the rear and pass the beginning end of the tape (printed side now facing upwards) over the slack arm and the stationary snubbers.

(3) Place the end of the tape in the wind reel slot. Rotate the reel two revolutions by hand. Return the snubber assembly to the operating position and latch in place.

(4) Press the release bar down and to the rear, position the tape for the proper number, latch the tape lid down, and restore the release bar.

(5) To rewind the tape, raise the tape lid, position the snubbers to the rear, and carefully and steadily rewind the tape by means of the crank on the rewind reel.

b. STARTING THE EQUIPMENT. *(See figure 4-9.)*

(1) Place the d-c power supply switch and the wireway switch in the receiver group in the ON position.

(2) Place the motor switches on the back of each receiver reperforator in the ON position. Leave the spare reperforator switch in the OFF position.

(3) Depress the RESET buttons on the receiver group.

(4) Place the d-c power supply switch and the wireway switch in the transmitter group in the ON position.

(5) Place the switches on the three distributor-transmitter bases in the ON position.

(6) Depress the RESET buttons on the transmitter groups.

(7) Place the NORMAL-LONG MESSAGE switches in the NORMAL position.

(8) Place the NUMBER-DELETE switches on the relay groups in the NUMBER position.

(9) Place the motor switches on the reeling machines and monitor reperforators in the ON position.

(10) Place the TRANSMITTER LOCKED-NORMAL switches in the monitor group in the NORMAL position.

(11) Check the POLAR-NEUTRAL switches on both sending and receiving relay groups for proper setting.

(12) Check the line current in the transmitter group. See Section 3, paragraph 3*b*(4).

(13) Check the time stamp setting. See Section 3, paragraph 3*c*(4).

c. OPERATING PROCEDURES. *(See figure 4-10.)*

(1) Tear off the completed message from the receiver group reperforators.

(2) Hang the message under the spring clip on either corner of the receiver cabinet with the beginning of the message under the clip.

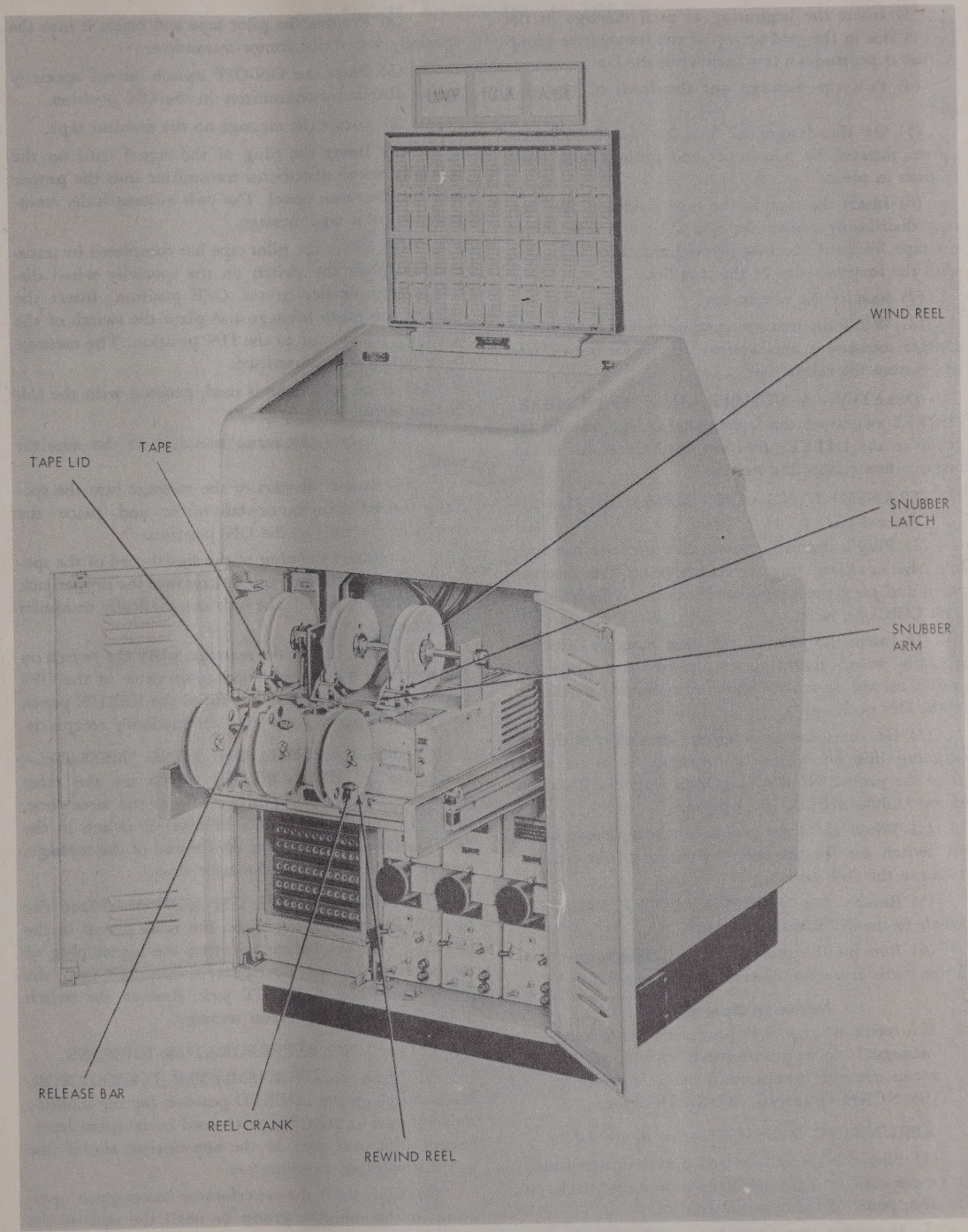

Figure 4—8. Transmitter Group, Rear View, Changing the Number Tape

(3) Insert the beginning of each message in the proper slot in the grid on top of the transmitter group so that it protrudes a few inches out the front.

(4) Pull the message out the front of the grid slot.

(5) On the designated message distributor-transmitter, depress the release bar and push it back until it locks in place.

(6) Insert the tape in the tape guide on the message distributor-transmitter and slide the tape under the tape lid until the first printed character is in line with the forward edge of the tape lid.

(7) Restore the release bar.

(8) While the message is being transmitted, insert another message in the tandem distributor-transmitter and restore the release bar.

d. DELETING A NUMBER.—Hold the NUMBER-DELETE switch on the front panel of the transmitter group in the DELETE position until transmission has begun; then release the switch.

e. TRANSMITTING LONG MESSAGES. *(See figure 4-11.)*

(1) Plug a specially wired distributor-transmitter into the auxiliary power receptacle on the receiver panel and plug the signal cord into the TRANSMITTER CIRCUIT jack.

(2) Insert the start of the long message into the specially wired distributor-transmitter and place the switch on the specially wired distributor-transmitter in the ON position.

(3) On the transmitter group associated with the outgoing line on which the message is to be sent, place the proper NORMAL-LONG MESSAGE switch in the LONG MESSAGE position.

(4) When the long message is completed, place the switch on the specially wired distributor-transmitter in the OFF position.

(5) Return the NORMAL - LONG MESSAGE switch to the NORMAL position.

(6) Remove the specially wired distributor-transmitter cords from the receiver group panel.

Notice to Operator

If a rerun message is in progress when a long message is to be transmitted, wait until the rerun message is completed before operating the NORMAL-LONG MESSAGE switch.

f. RERUNNING MESSAGES. *(See figure 4-12.)*

(1) Plug the specially wired distributor-transmitter power cord into the auxiliary power receptacle on the front panel of the monitor group.

(2) If a pilot tape is used, proceed with the following steps:

(*a*) Prepare the pilot tape and insert it into the specially wired distributor-transmitter.

(*b*) Place the ON-OFF switch on the specially wired distributor-transmitter in the ON position.

(*c*) Locate the message on the monitor tape.

(*d*) Insert the plug of the signal cord on the specially wired distributor-transmitter into the proper jack on the rerun panel. The unit automatically transmits the pilot tape message.

(*e*) When the pilot tape has completed its transmission, place the switch on the specially wired distributor-transmitter in the OFF position. Insert the start of the rerun message and place the switch of the specially wired unit to the ON position. The message is automatically transmitted.

(3) If no pilot tape is used, proceed with the following steps:

(*a*) Locate the rerun message on the monitor reel.

(*b*) Insert the start of the message into the specially wired distributor-transmitter and place the switch in the unit to the ON position.

(*c*) Insert the plug of the signal cord of the specially wired distributor-transmitter into the proper jack in the RERUN panel. The unit automatically transmits the rerun message.

(4) At the end of the message, place the switch on the specially wired distributor-transmitter in the OFF position, pull the signal cord out of the RERUN panel, and pull the power cord from the auxiliary receptacle.

g. NUMBER-DELETE ON LONG MESSAGE.—Place the NUMBER-DELETE switch on the relay group to the DELETE position and at the same time, place the NORMAL-LONG MESSAGE switch in the LONG MESSAGE position. At the end of the message, restore both switches at the same time.

h. NUMBER-DELETE ON RERUN.—Place the NUMBER-DELETE switch on the relay group in the DELETE position before inserting the signal plug of the specially wired distributor-transmitter into the TRANSMITTER CIRCUIT jack. Restore the switch after the start of the rerun message.

i. CHANGING REPERFORATOR RIBBONS.

(1) Place the TRANSMITTER LOCKED-NORMAL switch in the LOCKED position for the monitor reperforators or place the patch cord in the spare reperforator jack and then in the appropriate signal line jack for receiver reperforators.

(2) Wait until the reperforator has stopped operating in the monitor group or until the end of the message in the receiver group, then place the reperforator switch in the OFF position.

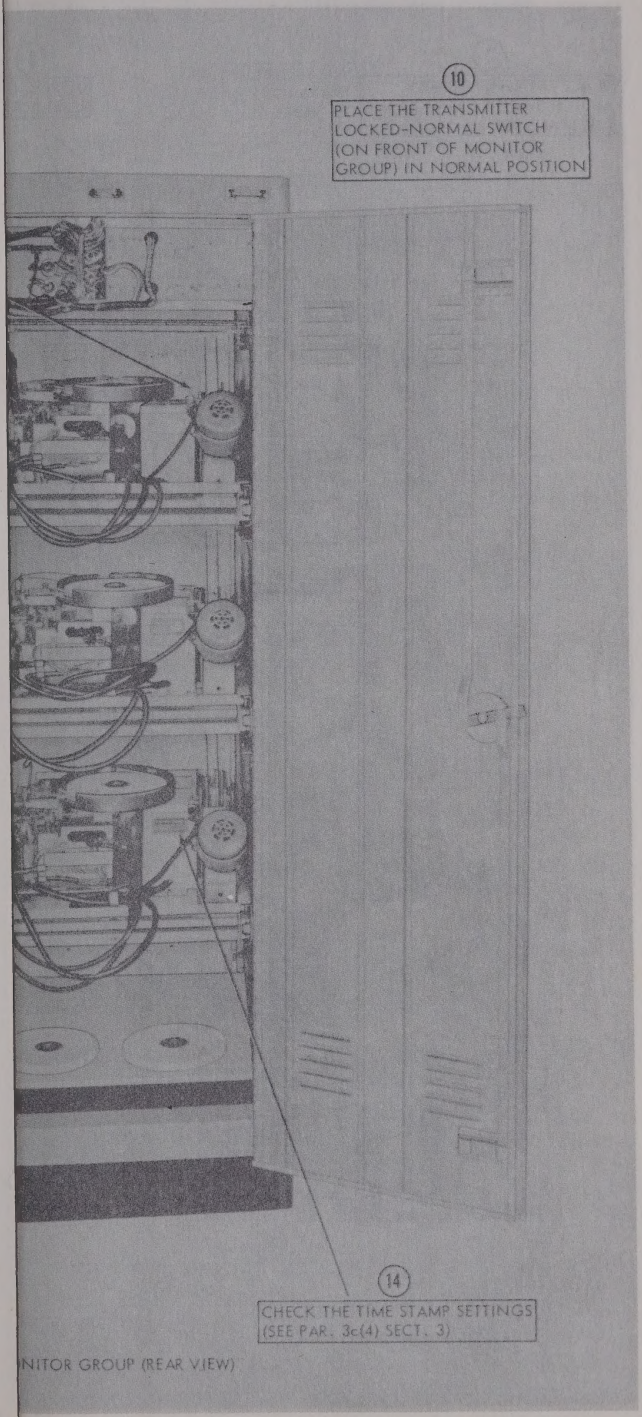
10
PLACE THE TRANSMITTER LOCKED-NORMAL SWITCH (ON FRONT OF MONITOR GROUP) IN NORMAL POSITION
14
CHECK THE TIME STAMP SETTINGS (SEE PAR. 3c(4) SECT. 3)

NITOR GROUP (REAR VIEW)

(3) Insert the beginning of each message in the proper slot in the grid on top of the transmitter group so that it protrudes a few inches out the front.

(4) Pull the message out the front of the grid slot.

(5) On the designated message distributor-transmitter, depress the release bar and push it back until it locks in place.

(6) Insert the tape in the tape guide on the message distributor-transmitter and slide the tape under the tape lid until the first printed character is in line with the forward edge of the tape lid.

(7) Restore the release bar.

(8) While the message is being transmitted, insert another message in the tandem distributor-transmitter and restore the release bar.

d. DELETING A NUMBER.—Hold the NUMBER-DELETE switch on the front panel of the transmitter group in the DELETE position until transmission has begun; then release the switch.

e. TRANSMITTING LONG MESSAGES. *(See figure 4-11.)*

(1) Plug a specially wired distributor-transmitter into the auxiliary power receptacle on the receiver panel and plug the signal cord into the TRANSMITTER CIRCUIT jack.

(2) Insert the start of the long message into the specially wired distributor-transmitter and place the switch on the specially wired distributor-transmitter in the ON position.

(3) On the transmitter group associated with the outgoing line on which the message is to be sent, place the proper NORMAL-LONG MESSAGE switch in the LONG MESSAGE position.

(4) When the long message is completed, place the switch on the specially wired distributor-transmitter in the OFF position.

(5) Return the NORMAL - LONG MESSAGE switch to the NORMAL position.

(6) Remove the specially wired distributor-transmitter cords from the receiver group panel.

Notice to Operator

If a rerun message is in progress when a long message is to be transmitted, wait until the rerun message is completed before operating the NORMAL-LONG MESSAGE switch.

f. RERUNNING MESSAGES. *(See figure 4-12.)*

(1) Plug the specially wired distributor-transmitter power cord into the auxiliary power receptacle on the front panel of the monitor group.

(2) If a pilot tape is used, proceed with the following steps:

(*a*) Prepare the pilot tape and insert it into the specially wired distributor-transmitter.

(*b*) Place the ON-OFF switch on the specially wired distributor-transmitter in the ON position.

(*c*) Locate the message on the monitor tape.

(*d*) Insert the plug of the signal cord on the specially wired distributor-transmitter into the proper jack on the rerun panel. The unit automatically transmits the pilot tape message.

(*e*) When the pilot tape has completed its transmission, place the switch on the specially wired distributor-transmitter in the OFF position. Insert the start of the rerun message and place the switch of the specially wired unit to the ON position. The message is automatically transmitted.

(3) If no pilot tape is used, proceed with the following steps:

(*a*) Locate the rerun message on the monitor reel.

(*b*) Insert the start of the message into the specially wired distributor-transmitter and place the switch in the unit to the ON position.

(*c*) Insert the plug of the signal cord of the specially wired distributor-transmitter into the proper jack in the RERUN panel. The unit automatically transmits the rerun message.

(4) At the end of the message, place the switch on the specially wired distributor-transmitter in the OFF position, pull the signal cord out of the RERUN panel, and pull the power cord from the auxiliary receptacle.

g. NUMBER-DELETE ON LONG MESSAGE.—Place the NUMBER-DELETE switch on the relay group to the DELETE position and at the same time, place the NORMAL-LONG MESSAGE switch in the LONG MESSAGE position. At the end of the message, restore both switches at the same time.

h. NUMBER-DELETE ON RERUN.—Place the NUMBER-DELETE switch on the relay group in the DELETE position before inserting the signal plug of the specially wired distributor-transmitter into the TRANSMITTER CIRCUIT jack. Restore the switch after the start of the rerun message.

i. CHANGING REPERFORATOR RIBBONS.

(1) Place the TRANSMITTER LOCKED-NORMAL switch in the LOCKED position for the monitor reperforators or place the patch cord in the spare reperforator jack and then in the appropriate signal line jack for receiver reperforators.

(2) Wait until the reperforator has stopped operating in the monitor group or until the end of the message in the receiver group, then place the reperforator switch in the OFF position.

NAVSHIPS 92378
AN/FGC-38, AN/FGC-38X, AN/FGC-39
NAVSHIPS 92378
AN/FGC-38, AN/FGC-38X, AN/FGC-39

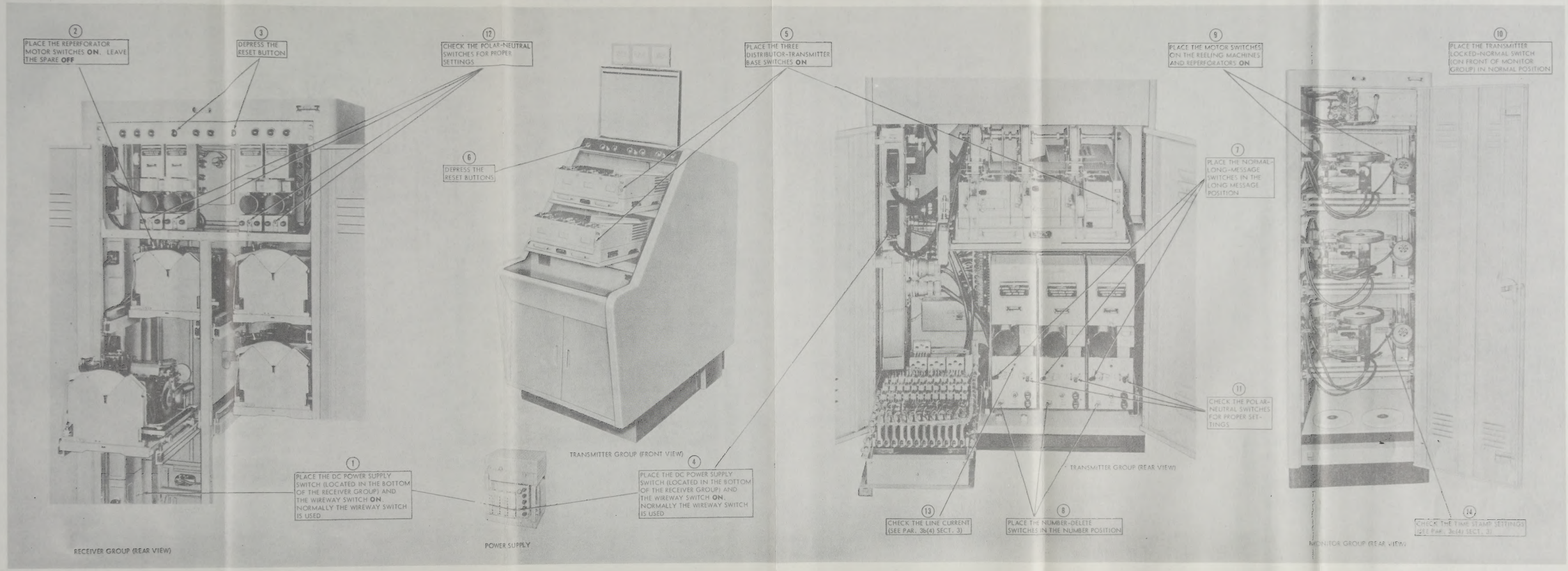
2
PLACE THE REPERFORATOR MOTOR SWITCHES ON. LEAVE THE SPARE OFF
3
DEPRESS THE RESET BUTTON
12
CHECK THE POLAR-NEUTRAL SWITCHES FOR PROPER SETTINGS
5
PLACE THE THREE DISTRIBUTOR-TRANSMITTER BASE SWITCHES ON
9
PLACE THE MOTOR SWITCHES ON THE REELING MACHINES AND REPERFORATORS ON
10
PLACE THE TRANSMITTER LOCKED-NORMAL SWITCH (ON FRONT OF MONITOR GROUP) IN NORMAL POSITION
6
DEPRESS THE RESET BUTTONS
7
PLACE THE NORMAL-LONG-MESSAGE SWITCHES IN THE LONG MESSAGE POSITION
1
PLACE THE DC POWER SUPPLY SWITCH (LOCATED IN THE BOTTOM OF THE RECEIVER GROUP) AND THE WIREWAY SWITCH ON. NORMALLY THE WIREWAY SWITCH IS USED
4
PLACE THE DC POWER SUPPLY SWITCH (LOCATED IN THE BOTTOM OF THE RECEIVER GROUP) AND THE WIREWAY SWITCH ON. NORMALLY THE WIREWAY SWITCH IS USED
11
CHECK THE POLAR-NEUTRAL SWITCHES FOR PROPER SETTINGS
13
CHECK THE LINE CURRENT (SEE PAR. 3b(4) SECT. 3)
8
PLACE THE NUMBER-DELETE SWITCHES IN THE NUMBER POSITION
14
CHECK THE TIME STAMP SETTINGS (SEE PAR. 3c(4) SECT. 3)
RECEIVER GROUP (REAR VIEW)
TRANSMITTER GROUP (FRONT VIEW)
POWER SUPPLY
TRANSMITTER GROUP (REAR VIEW)
MONITOR GROUP (REAR VIEW)

Figure 4–9. Teletypewriter Set, Starting Procedure

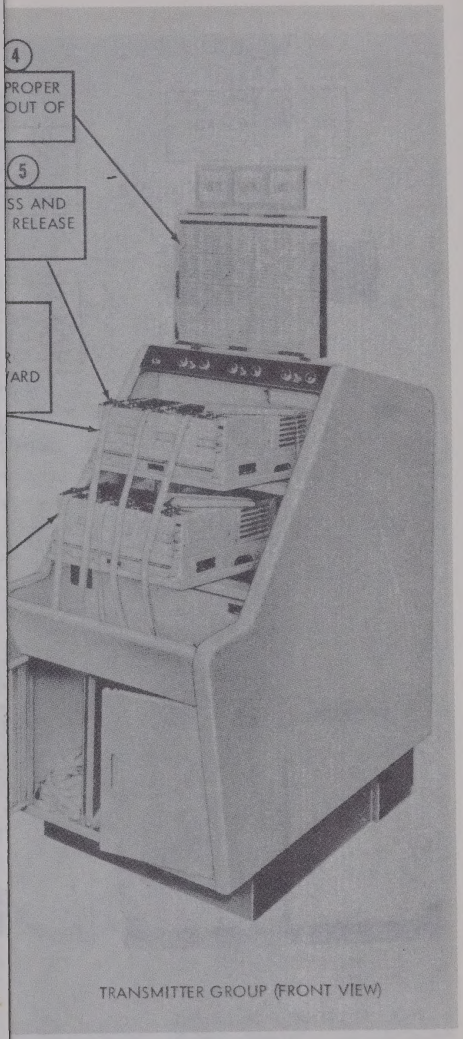

TRANSMITTER GROUP (FRONT VIEW)

NAVSHIPS 92378
AN/FGC-38, AN/FGC-38X, AN/FGC-39
NAVSHIPS 92378
AN/FGC-38, AN/FGC-38X, AN/FGC-39

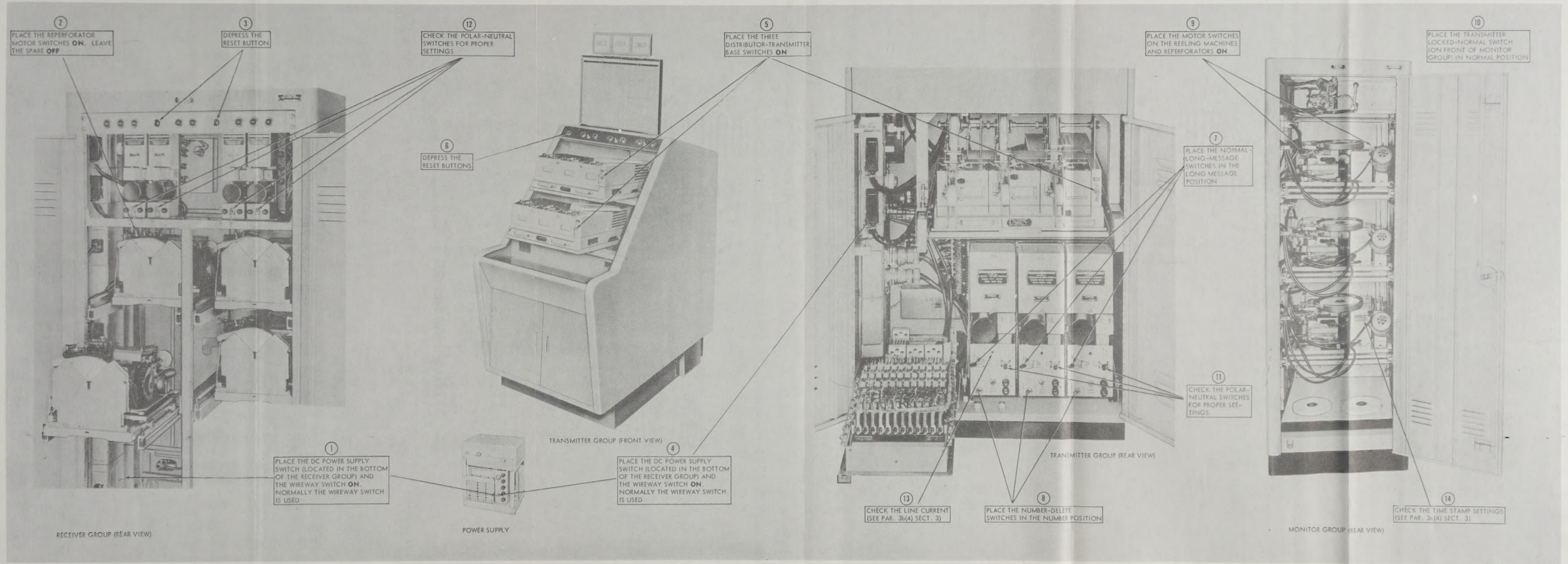
2
PLACE THE REPERFORATOR MOTOR SWITCHES ON. LEAVE THE SPARE OFF
3
DEPRESS THE RESET BUTTON
12
CHECK THE POLAR-NEUTRAL SWITCHES FOR PROPER SETTINGS
6
DEPRESS THE RESET BUTTONS
5
PLACE THE THREE DISTRIBUTOR-TRANSMITTER BASE SWITCHES ON
9
PLACE THE MOTOR SWITCHES ON THE REELING MACHINES AND REPERFORATORS ON
10
PLACE THE TRANSMITTER LOCKED-NORMAL SWITCH (ON FRONT OF MONITOR GROUP) IN NORMAL POSITION
7
PLACE THE NORMAL-LONG-MESSAGE SWITCHES IN THE LONG MESSAGE POSITION
11
CHECK THE POLAR-NEUTRAL SWITCHES FOR PROPER SETTINGS
1
PLACE THE DC POWER SUPPLY SWITCH (LOCATED IN THE BOTTOM OF THE RECEIVER GROUP) AND THE WIREWAY SWITCH ON. NORMALLY THE WIREWAY SWITCH IS USED
4
PLACE THE DC POWER SUPPLY SWITCH (LOCATED IN THE BOTTOM OF THE RECEIVER GROUP) AND THE WIREWAY SWITCH ON. NORMALLY THE WIREWAY SWITCH IS USED
13
CHECK THE LINE CURRENT (SEE PAR. 3b(4) SECT. 3)
8
PLACE THE NUMBER-DELETE SWITCHES IN THE NUMBER POSITION
14
CHECK THE TIME STAMP SETTINGS (SEE PAR. 3c(4) SECT. 3)
TRANSMITTER GROUP (FRONT VIEW)
TRANSMITTER GROUP (REAR VIEW)
RECEIVER GROUP (REAR VIEW)
POWER SUPPLY
MONITOR GROUP (REAR VIEW)

Figure 4–9. Teletypewriter Set, Starting Procedure

NAVSHIPS 92378
AN/FGC-38, AN/FGC-38X, AN/FGC-39

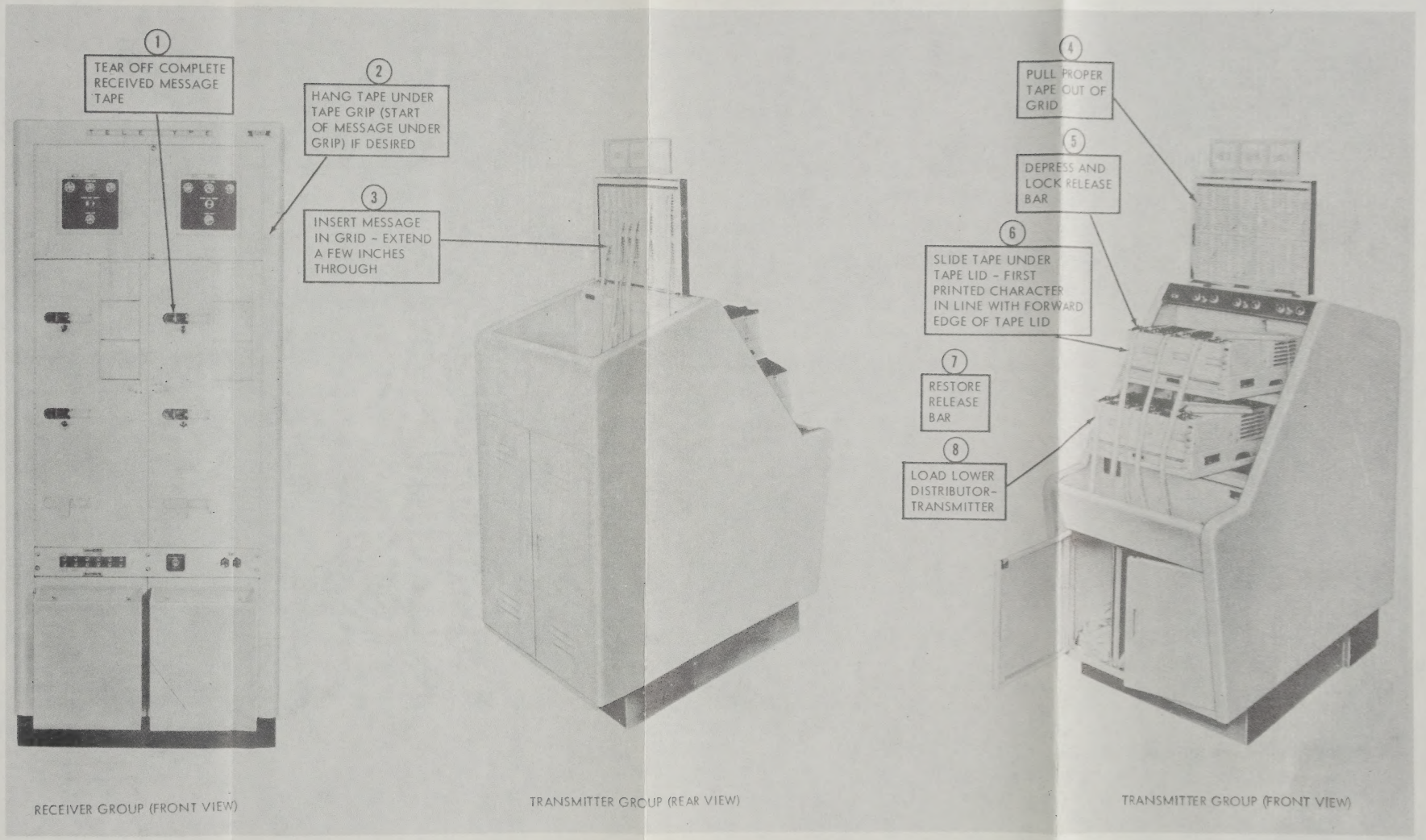
1
TEAR OFF COMPLETE RECEIVED MESSAGE TAPE
2
HANG TAPE UNDER TAPE GRIP (START OF MESSAGE UNDER GRIP) IF DESIRED
3
INSERT MESSAGE IN GRID - EXTEND A FEW INCHES THROUGH
4
PULL PROPER TAPE OUT OF GRID
5
DEPRESS AND LOCK RELEASE BAR
6
SLIDE TAPE UNDER TAPE LID - FIRST PRINTED CHARACTER IN LINE WITH FORWARD EDGE OF TAPE LID
7
RESTORE RELEASE BAR
8
LOAD LOWER DISTRIBUTOR-TRANSMITTER
RECEIVER GROUP (FRONT VIEW)
TRANSMITTER GROUP (REAR VIEW)
TRANSMITTER GROUP (FRONT VIEW)

Figure 4–10. Teletypewriter Set, Operating Procedure

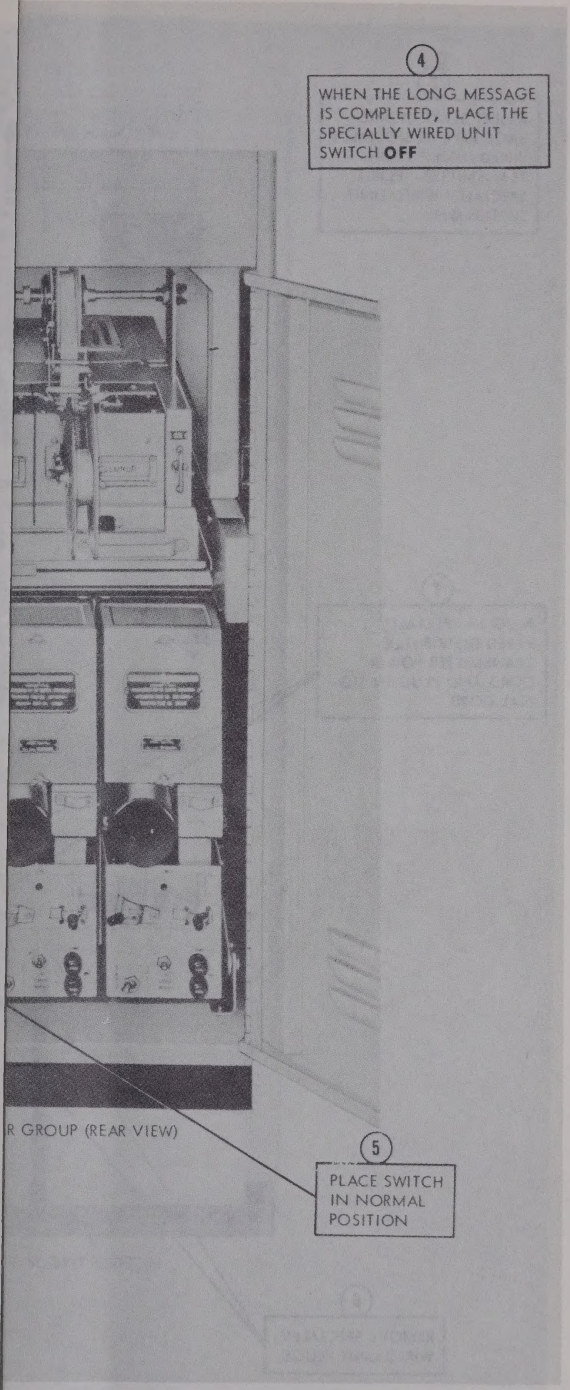
4
WHEN THE LONG MESSAGE IS COMPLETED, PLACE THE SPECIALLY WIRED UNIT SWITCH OFF
R GROUP (REAR VIEW)
5
PLACE SWITCH IN NORMAL POSITION

iter Set, Long Message Operations

NAVSHIPS 92378
AN/FGC-38, AN/FGC-38X, AN/FGC-39

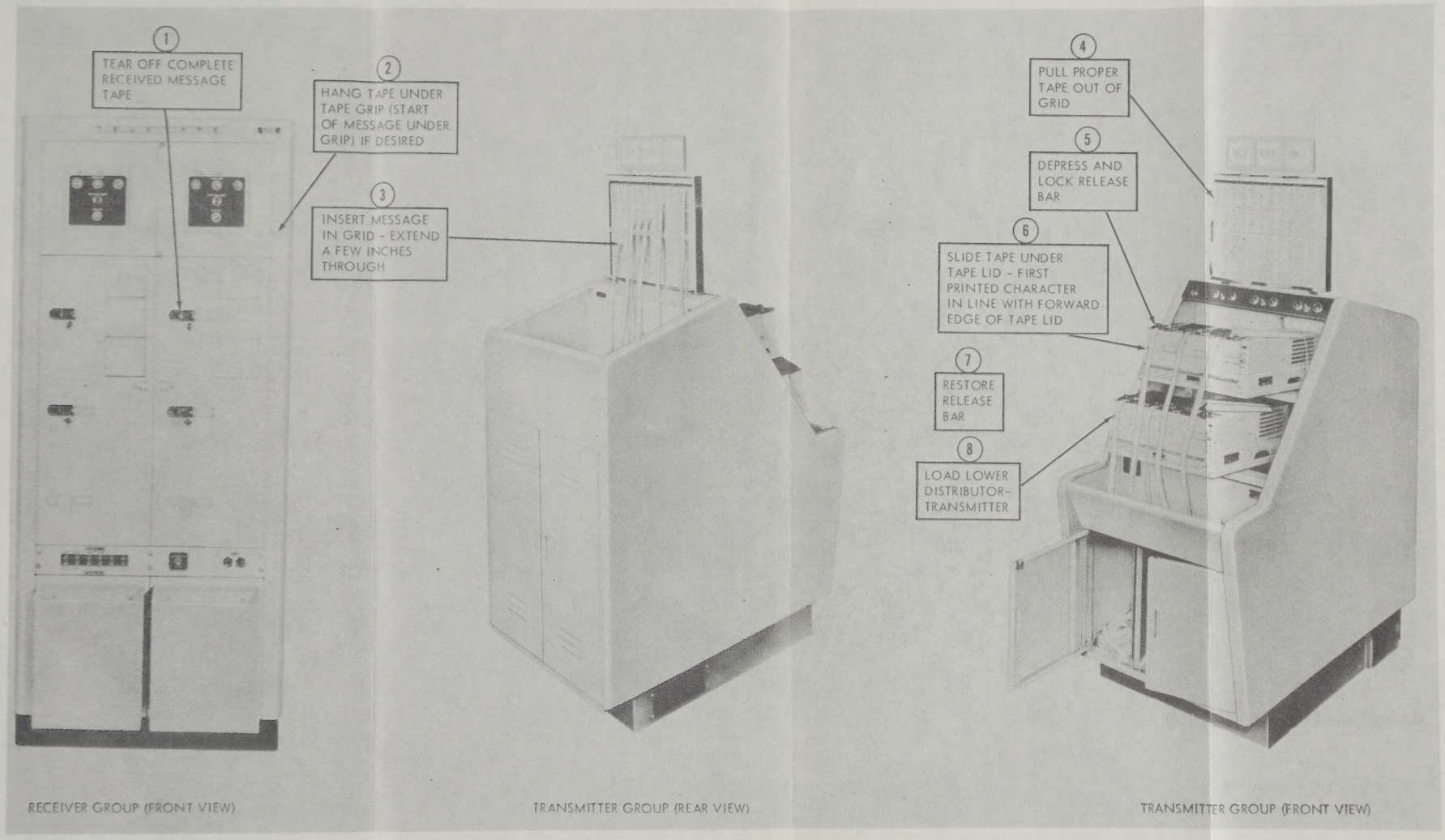
1
TEAR OFF COMPLETE RECEIVED MESSAGE TAPE
2
HANG TAPE UNDER TAPE GRIP (START OF MESSAGE UNDER GRIP) IF DESIRED
3
INSERT MESSAGE IN GRID - EXTEND A FEW INCHES THROUGH
4
PULL PROPER TAPE OUT OF GRID
5
DEPRESS AND LOCK RELEASE BAR
6
SLIDE TAPE UNDER TAPE LID - FIRST PRINTED CHARACTER IN LINE WITH FORWARD EDGE OF TAPE LID
7
RESTORE RELEASE BAR
8
LOAD LOWER DISTRIBUTOR-TRANSMITTER
RECEIVER GROUP (FRONT VIEW)
TRANSMITTER GROUP (REAR VIEW)
TRANSMITTER GROUP (FRONT VIEW)

Figure 4—10. Teletypewriter Set, Operating Procedure

NAVSHIPS 92378
AN/FGC-38, AN/FGC-38X, AN/FGC-39

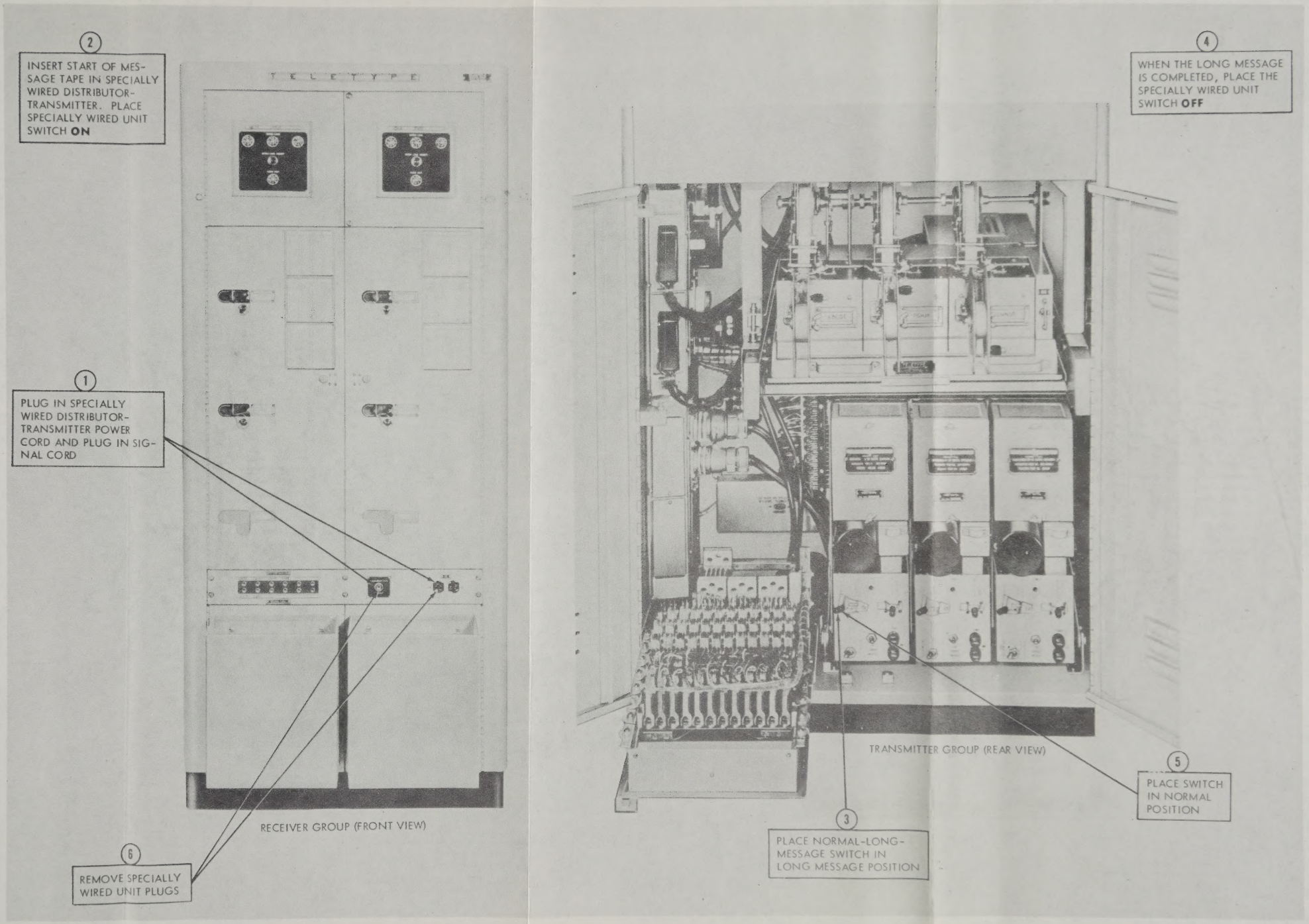
2
INSERT START OF MESSAGE TAPE IN SPECIALLY WIRED DISTRIBUTOR-TRANSMITTER. PLACE SPECIALLY WIRED UNIT SWITCH ON
1
PLUG IN SPECIALLY WIRED DISTRIBUTOR-TRANSMITTER POWER CORD AND PLUG IN SIGNAL CORD
RECEIVER GROUP (FRONT VIEW)
6
REMOVE SPECIALLY WIRED UNIT PLUGS
4
WHEN THE LONG MESSAGE IS COMPLETED, PLACE THE SPECIALLY WIRED UNIT SWITCH OFF
TRANSMITTER GROUP (REAR VIEW)
5
PLACE SWITCH IN NORMAL POSITION
3
PLACE NORMAL-LONG-MESSAGE SWITCH IN LONG MESSAGE POSITION

Figure 4–11. Teletypewriter Set, Long Message Operations

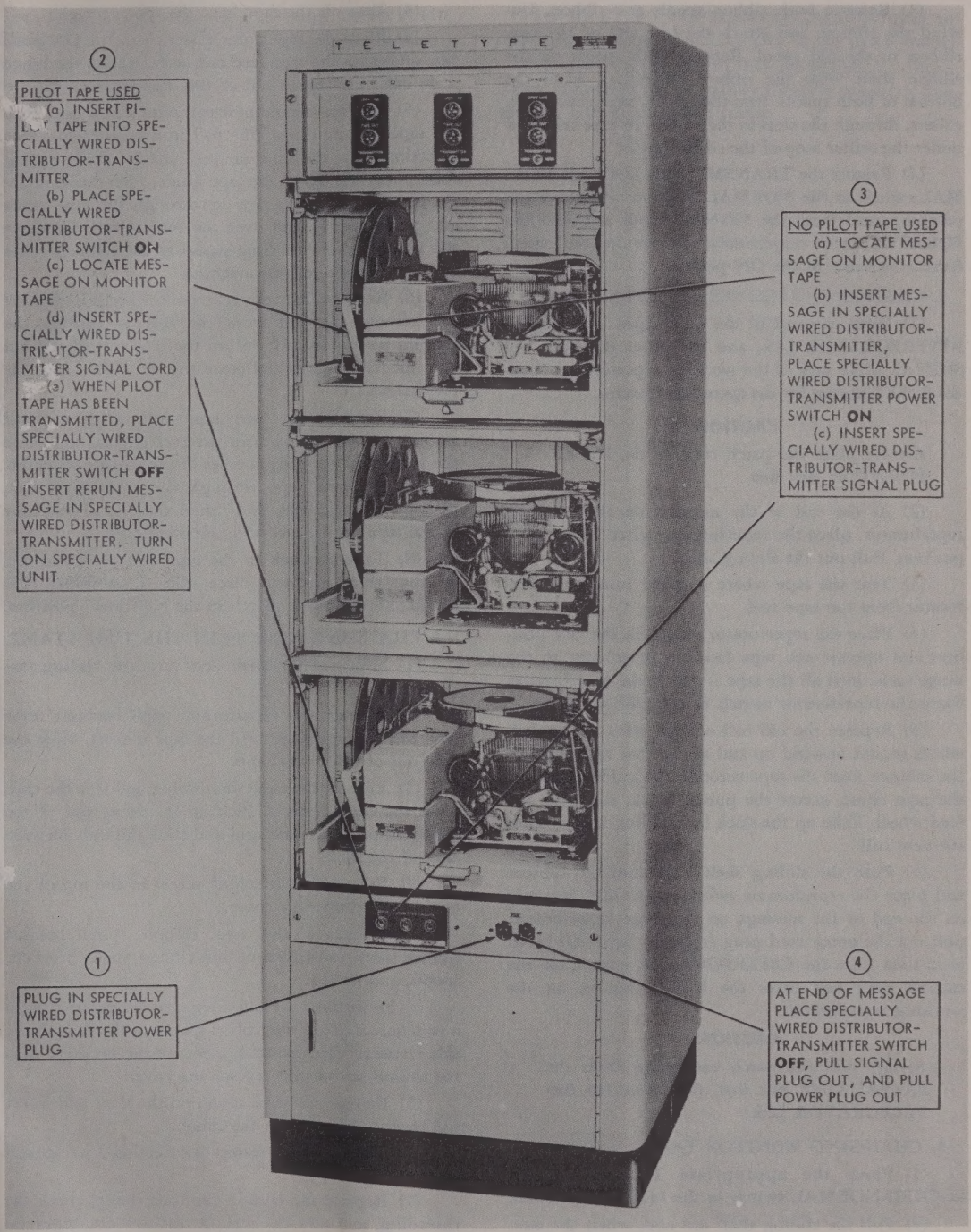
TELETYPE
2
PILOT TAPE USED
(a) INSERT PILOT TAPE INTO SPECIALLY WIRED DISTRIBUTOR-TRANSMITTER
(b) PLACE SPECIALLY WIRED DISTRIBUTOR-TRANSMITTER SWITCH ON
(c) LOCATE MESSAGE ON MONITOR TAPE
(d) INSERT SPECIALLY WIRED DISTRIBUTOR-TRANSMITTER SIGNAL CORD
(e) WHEN PILOT TAPE HAS BEEN TRANSMITTED, PLACE SPECIALLY WIRED DISTRIBUTOR-TRANSMITTER SWITCH OFF INSERT RERUN MESSAGE IN SPECIALLY WIRED DISTRIBUTOR-TRANSMITTER. TURN ON SPECIALLY WIRED UNIT
3
NO PILOT TAPE USED
(a) LOCATE MESSAGE ON MONITOR TAPE
(b) INSERT MESSAGE IN SPECIALLY WIRED DISTRIBUTOR-TRANSMITTER, PLACE SPECIALLY WIRED DISTRIBUTOR-TRANSMITTER POWER SWITCH ON
(c) INSERT SPECIALLY WIRED DISTRIBUTOR-TRANSMITTER SIGNAL PLUG
1
PLUG IN SPECIALLY WIRED DISTRIBUTOR-TRANSMITTER POWER PLUG
4
AT END OF MESSAGE PLACE SPECIALLY WIRED DISTRIBUTOR-TRANSMITTER SWITCH OFF, PULL SIGNAL PLUG OUT, AND PULL POWER PLUG OUT

Figure 4—12. Teletypewriter Set, Rerunning Message Operations

NAVSHIPS 92378
AN/FGC-38, AN/FGC-38X, AN/FGC-39

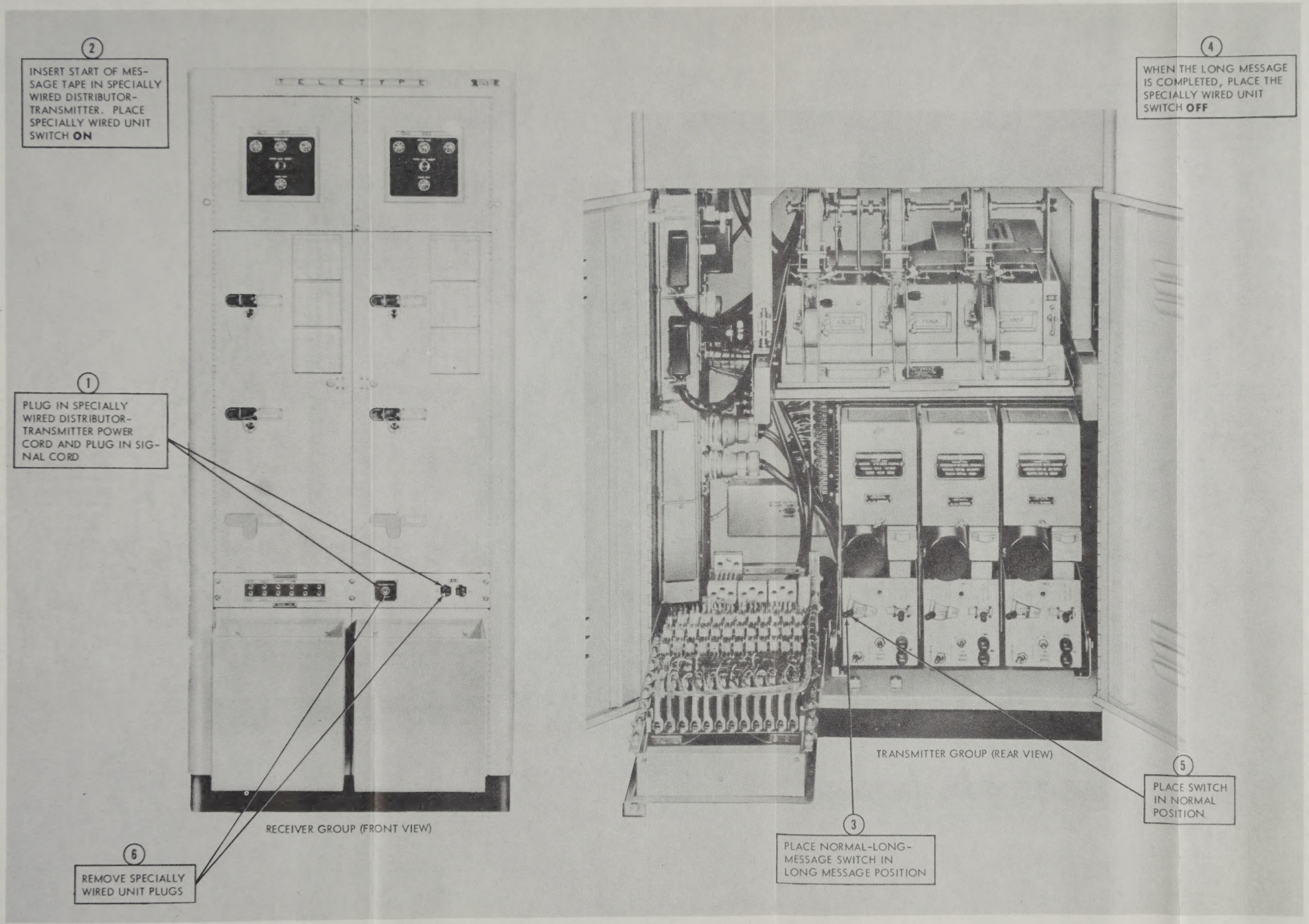
2
INSERT START OF MESSAGE TAPE IN SPECIALLY WIRED DISTRIBUTOR-TRANSMITTER. PLACE SPECIALLY WIRED UNIT SWITCH ON
4
WHEN THE LONG MESSAGE IS COMPLETED, PLACE THE SPECIALLY WIRED UNIT SWITCH OFF
1
PLUG IN SPECIALLY WIRED DISTRIBUTOR-TRANSMITTER POWER CORD AND PLUG IN SIGNAL CORD
TELETYPE
RECEIVER GROUP (FRONT VIEW)
TRANSMITTER GROUP (REAR VIEW)
5
PLACE SWITCH IN NORMAL POSITION
3
PLACE NORMAL-LONG-MESSAGE SWITCH IN LONG MESSAGE POSITION
6
REMOVE SPECIALLY WIRED UNIT PLUGS

Figure 4—11. Teletypewriter Set, Long Message Operations

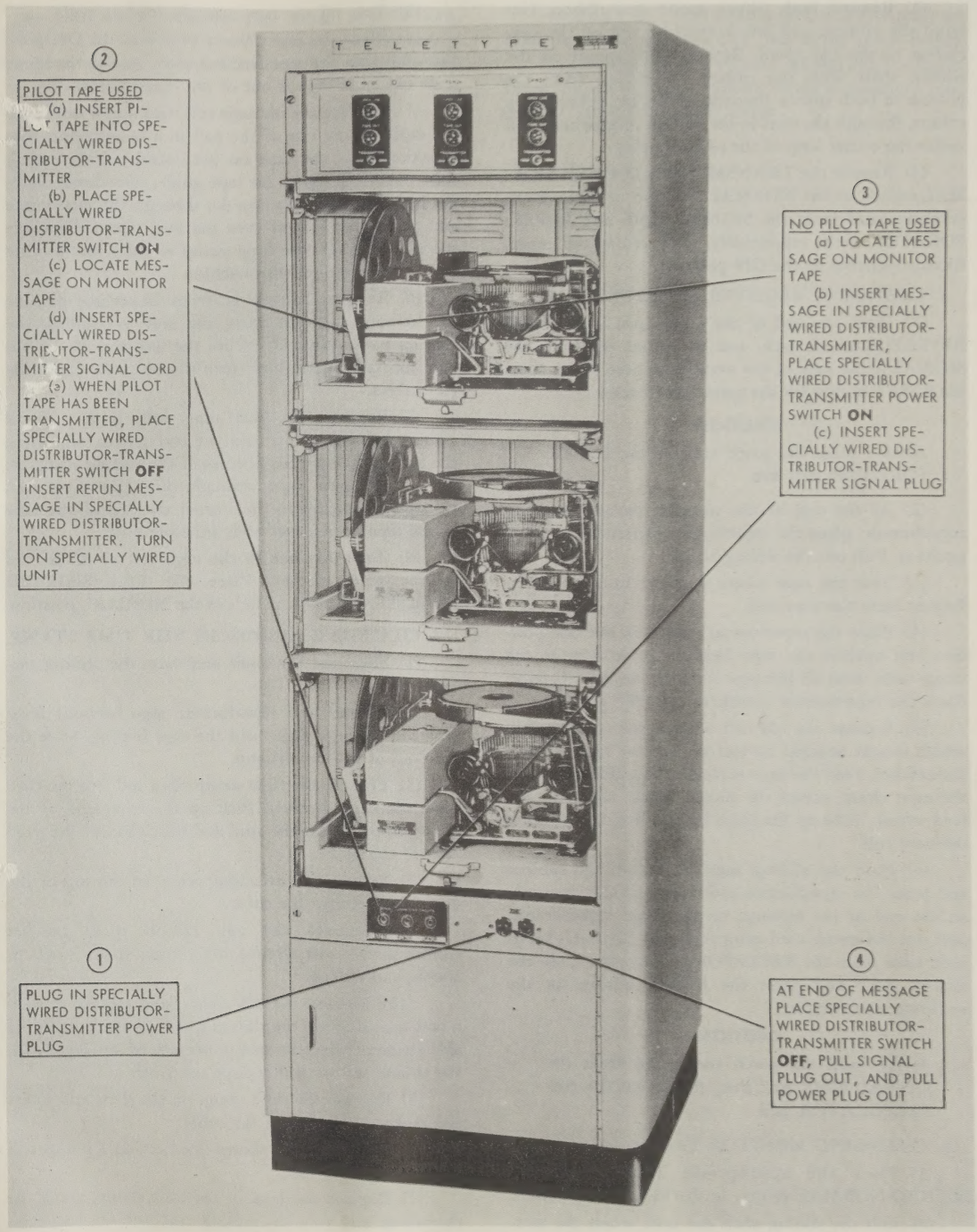
TELETYPE
2
PILOT TAPE USED
(a) INSERT PILOT TAPE INTO SPECIALLY WIRED DISTRIBUTOR-TRANSMITTER
(b) PLACE SPECIALLY WIRED DISTRIBUTOR-TRANSMITTER SWITCH ON
(c) LOCATE MESSAGE ON MONITOR TAPE
(d) INSERT SPECIALLY WIRED DISTRIBUTOR-TRANSMITTER SIGNAL CORD
(e) WHEN PILOT TAPE HAS BEEN TRANSMITTED, PLACE SPECIALLY WIRED DISTRIBUTOR-TRANSMITTER SWITCH OFF INSERT RERUN MESSAGE IN SPECIALLY WIRED DISTRIBUTOR-TRANSMITTER. TURN ON SPECIALLY WIRED UNIT
3
NO PILOT TAPE USED
(a) LOCATE MESSAGE ON MONITOR TAPE
(b) INSERT MESSAGE IN SPECIALLY WIRED DISTRIBUTOR-TRANSMITTER, PLACE SPECIALLY WIRED DISTRIBUTOR-TRANSMITTER POWER SWITCH ON
(c) INSERT SPECIALLY WIRED DISTRIBUTOR-TRANSMITTER SIGNAL PLUG
1
PLUG IN SPECIALLY WIRED DISTRIBUTOR-TRANSMITTER POWER PLUG
4
AT END OF MESSAGE PLACE SPECIALLY WIRED DISTRIBUTOR-TRANSMITTER SWITCH OFF, PULL SIGNAL PLUG OUT, AND PULL POWER PLUG OUT

Figure 4—12. Teletypewriter Set, Rerunning Message Operations

(3) Remove both ribbon spools and ribbon. Unwind the ribbon, and attach the free end of the new ribbon to the old spool. Replace both spools on the ribbon shaft with the ribbon unwinding from the bottom of both spools. Pass the ribbon over the ribbon rollers, through the slots in the ribbon reverse arm, and under the center loop of the ribbon guide.

(4) Restore the TRANSMITTER LOCKED-NORMAL switch to the NORMAL position or remove the patching cord from the SIGNAL LINE and REPERFORATOR jacks respectively, and restore the reperforator switches to the ON position.

j. CHANGING RECEIVER MESSAGE TAPE.

(1) Place one end of the patch cord in the spare REPERFORATOR jack, and the other end into the SIGNAL LINE jack of the working reperforator. Press the RESET button for the spare reperforator.

CAUTION

Always place the patch cord in the REPERFORATOR jack first.

(2) At the end of the message on the working reperforator, place the reperforator switch in the OFF position. Pull out the sliding shelf.

(3) Tear the tape where it is fed into the reperforator from the tape reel.

(4) Place the reperforator switch in the ON position and operate the tape feed-out lever next to the range scale until all the tape is out of the reperforator. Place the reperforator switch in the OFF position.

(5) Replace the old roll of tape with a new roll, which should unwind up and toward the right side of the cabinet. Feed the tape through the guides, through the tape chute, across the punch block, and over the feed wheel. Take up the slack by winding it back onto the new roll.

(6) Push the sliding shelf back into the cabinet and place the reperforator switch in the ON position. At the end of the message on the spare reperforator, pull out the patch cord plug from the SIGNAL LINE jack, then from the REPERFORATOR jack. Close the cabinet door and press the RESET button on the working reperforator.

CAUTION

Always pull the patch cord plug from the SIGNAL LINE jack first, then from the REPERFORATOR jack.

k. CHANGING MONITOR TAPE.

(1) Place the appropriate TRANSMITTER LOCKED-NORMAL switch in the LOCKED position.

(2) Pull the sliding shelf out and, when the message is completed, place the reperforator switch in the OFF position.

(3) Tear off the tape near the feeding reel.

(4) Place the reperforator switch in the ON position and press the tape feed-out lever next to the range scale until the tape is out of the reperforator.

(5) Replace the old tape roll with a new one, with the tape coming out of the roll in a counterclockwise direction. Pass the tape on the outside of the spring roller, over the top of the tape guide, then down under the bottom of the tape guide, through the tape chute and punch block, and over the feed wheel. Continue the tape through the time stamp at the white marker and to the tape reeling machine.

(6) Remove the tape reel from the reeling machine and remove the roll from the reel by pulling the locking plate outward. Secure the free end of the old roll, identify, mark, and store the old roll. Clean the reel halves.

(7) Replace the used tape roll, with a small amount of tape on it, into the reel halves, and place the reel in the forward notches of the reeling machine. Thread the new tape through the tight tape arm, through the snubbers, and fasten the end of the tape to the tape on the reel with adhesive tape.

(8) Take up slack in the tape and place the reel in the rear notches. Place the TRANSMITTER LOCKED-NORMAL switch in the NORMAL position.

l. CHANGING RIBBON IN THE TIME STAMP.

(1) Slide out the shelf and turn the reeling machine off.

(2) Operate the reperforator tape feed-out lever next to the range scale until the tape is slack. Slide the tape out of the time stamp.

(3) Remove the time stamp plug and free the cord from the cable holders. Pick up the front end of the time stamp to clear the stud and slide the unit forward and off the shelf.

(4) Remove the attaching screw in the top of the cover and remove the cover.

(*a*) Remove the two ribbon spool bracket thumb screws and remove the ribbon spool brackets, spools, and ribbon.

(*b*) Remove the old ribbon and replace it with a new one. Replace the ribbon spools in the slots in the side frame of the time stamp. Secure the brackets with the thumb screws and replace the cover.

(5) Replace the time stamp on the shelf and insert the power plug. Secure the cable.

(6) Reset the time stamp (see Section 3 paragraph 3*c*(4).

(7) Replace the tape in the time stamp, check the threading, and turn the reeling machine on. Supervise for a few minutes to check for normal operation, then slide the shelf in and close the disappearing door.

m. TRANSMITTING TO THE MONITOR GROUP ON OPEN LINE.—To transmit to the monitor group during an open line condition, proceed with the following steps.

(1) BATTERY SUPPLIED LOCALLY.—Insert an open plug into the CIRCUIT jack at the patch frame.

(2) BATTERY SUPPLIED REMOTELY.—Insert a jack, connected to line battery (observe polarity), into the SET jack at the patch frame.

INSTRUCTION BOOK

for

TELETYPEWRITER SETS AN/FGC-38, AN/FGC-38X, and AN/FGC-39

SECTION 5

OPERATOR'S MAINTENANCE

INSTRUCTION BOOK

for

TELETYPEWRITER SETS AN/FGC-38, AN/FGC-38X, and AN/FGC-39

SECTION 5

OPERATOR'S MAINTENANCE

TABLE OF CONTENTS

Paragraph		Page
1.	Routine Check Chart	5-0
2.	Emergency Maintenance	5-0
a.	Probable Fuse Failure	5-0
b.	Fuse Locations	5-2

LIST OF ILLUSTRATIONS

Figure	Title	Page
5-1	Receiver Group Fuse Locations	5-3
5-2	Transmitter Group Fuse Locations	5-5
5-3	Monitor Group Fuse Locations	5-6
5-4	Power Supply PP-987/U, Fuse Locations	5-7
5-5	Control Panel SB-358/FGC, Fuse Locations	5-8
5-6	Control Panel SB-357/FGC, Fuse Locations	5-9

LIST OF TABLES

Table	Title	Page
5-1	Routine Check Chart of Receiver Group Continuous Check	5-0
5-2	Routine Check Chart of Transmitter Group Continuous Check	5-0
5-3	Routine Check Chart of Monitor Group Continuous Check	5-0
5-4	Symptoms of Fuse Failure in Receiver Group	5-1
5-5	Symptoms of Fuse Failure in Transmitter Group	5-1
5-6	Symptoms of Fuse Failure in Monitor Group	5-1
5-7	Symptoms of Fuse Failure in Power Supply	5-2
5-8	Symptoms of Fuse Failure in Control Panel SB-358/FGC	5-2
5-9	Symptoms of Fuse Failure in Control Panel SB-357/FGC	5-2
5-10	Fuse Locations in Receiver Group	5-2
5-11	Fuse Locations in Transmitter Group	5-5
5-12	Fuse Locations in Monitor Group	5-6
5-13	Fuse Locations in Power Supply	5-7
5-14	Fuse Locations in Control Panel SB-358/FGC	5-8
5-15	Fuse Locations in Control Panel SB-357/FGC	5-9

SECTION 5
OPERATOR'S MAINTENANCE

1. ROUTINE CHECK CHARTS.

The following tables indicate the continuous checks of each group.

TABLE 5-1. ROUTINE CHECK CHART OF RECEIVER GROUP CONTINUOUS CHECK

WHAT TO CHECK	HOW TO CHECK	REMARKS
Tape supply	Tape out alarm lamp. Tape color.	If lighted, replenish. (See Section 4.) If red, replenish. (See Section 4.)
Message tape	Inspect perforations. Inspect typing. Inspect text.	If faulty, notify authorized personnel. If light, replace ribbon. (See Section 4.) If blurred, clean type pallets. If garbled, notify authorized personnel.
OPEN LINE alarm	Observe lamp.	If lit, press reset button. Check tape for lost characters. If lamp is not extinguished, notify authorized personnel.

TABLE 5-2. ROUTINE CHECK CHART OF TRANSMITTER GROUP CONTINUOUS CHECK

WHAT TO CHECK	HOW TO CHECK	REMARKS
Tape feeding	Observe tape being fed through distributor-transmitter.	If tape is not being fed correctly, depress release bar and reposition tape. If feeding is still faulty, notify authorized maintenance personnel.
OPEN LINE alarm	Observe lamp.	If lit, press reset button, depress release bar, back up tape and rerun message from beginning. If lamp is not extinguished, notify authorized maintenance personnel.
Expended tape bins	See if it is filled with tape.	When full, empty as per office procedure.
Tandem operation	See that the other transmitter starts when the message in one is completed.	If faulty, notify authorized maintenance personnel.
Message numbering	See that there is a noticeable delay before a message tape starts feeding.	If no delay, notify authorized maintenance personnel.

TABLE 5-3. ROUTINE CHECK CHART OF MONITOR GROUP CONTINUOUS CHECK

WHAT TO CHECK	HOW TO CHECK	REMARKS
Tape supply	Tape out alarm lamp. Tape color.	If lit, replenish tape. (See Section 4.) If red, replenish tape. (See Section 4.)
Monitor tape	Inspect perforations. Inspect typing. Inspect text.	If faulty, notify authorized maintenance personnel. If light, replace ribbon. (See Section 4.) If blurred, clean type pallets. If garbled, notify authorized maintenance personnel.
OPEN LINE alarm	Observe lamp.	Refer to transmitter open line alarm.
Time Registration	Observe tape coming out of time stamp.	If not stamping correctly, notify authorized maintenance personnel.
Tape reeling	Observe reeling of tape on tape reeling machine.	If faulty, notify authorized maintenance personnel.

2. EMERGENCY MAINTENANCE.

Notice to Operators

Operators shall not perform any of the following emergency maintenance procedures without proper authorization.

a. PROBABLE FUSE FAILURE.—Symptoms of probable fuse failure are given in tables 5-4, 5-5, 5-6, 5-7, 5-8, and 5-9.

WARNING

Never replace a fuse with one of higher rating unless continued operation of the equipment is more important than probable damage. If a fuse burns out immediately after replacement, do not replace it a second time until the cause has been corrected.

TABLE 5-4. SYMPTOMS OF FUSE FAILURE IN RECEIVER GROUP

INDICATION	BLOWN FUSE		COMMENTS
	AN/FGC-38, 39	AN/FGC-38X	
Upper left reperforator does not operate	F-1901	F-1909	Replace fuse.
Upper right reperforator does not operate	F-1902	F-1910	Replace fuse.
Middle left reperforator does not operate	F-1903	F-1911	Replace fuse.
Middle right reperforator does not operate	F-1904	F-1912	Replace fuse. (This reperforator is the spare.)
Lower left reperforator does not operate	F-1905	F-1913	Replace fuse. (This reperforator is not supplied with equipment.)
Lower right reperforator does not operate	F-1906	F-1914	Replace fuse. (This reperforator is not supplied with equipment.)
Auxiliary distributor-transmitter does not operate	F-1907	F-1915	Replace fuse.
No lamps operate	F-1908	F-1916	Replace fuse.

TABLE 5-5. SYMPTOMS OF FUSE FAILURE IN TRANSMITTER GROUP

INDICATION	BLOWN FUSE		COMMENTS
	AN/FGC-38, 39	AN/FGC-38X	
Upper message distributor-transmitters do not operate. Busy lamp and open line alarm lamp associated with line 1 on transmitting and monitoring cabinets do not light.	F-2001	F-2004	Replace fuse.
Lower message distributor-transmitters do not operate. Busy lamp and open line alarm lamp associated with line 2 on transmitting and monitoring cabinets do not light.	F-2002	F-2005	Replace fuse.
Number distributor-transmitters do not operate. Busy lamp and open line alarm lamp associated with line 3 on transmitting and monitoring cabinets do not light.	F-2003	F-2006	Replace fuse.

TABLE 5-6. SYMPTOMS OF FUSE FAILURE IN MONITOR GROUP

INDICATION	BLOWN FUSE		COMMENTS
	AN/FGC-38, 39	AN/FGC-38X	
Upper reperforator and reeling machine do not operate. Tape out alarm lamp does not light.	F-301	F-310	Replace fuse.
Middle reperforator and reeling machine do not operate. Tape out alarm lamp does not light.	F-302	F-311	Replace fuse.
Lower reperforator and reeling machine do not operate. Tape out alarm lamp does not light.	F-303	F-312	Replace fuse.
Upper time stamp does not operate.	F-305		Replace fuse.
Middle time stamp does not operate.	F-306		Replace fuse.
Lower time stamp does not operate.	F-307		Replace fuse.
Auxiliary and convenience receptacles do not supply power.	F-304	F-313	Replace fuse.

TABLE 5-7. SYMPTOMS OF FUSE FAILURE IN POWER SUPPLY

INDICATION	BLOWN FUSE	COMMENTS
D-c pilot lamp does not light	F-501 and/or F-502	Each fuse is connected to one side of the line. If either fuse blows, the power supply is not energized. Replace blown fuse.
TRANSMITTER GROUP. Open line alarm lamp lit. Transmission stops. Busy lights remain lit. Monitor reperforators run open.	F-503	Replace fuse.
RECEIVER GROUP. Receiving reperforators run open.	F-503	Replace fuse.
TRANSMITTER GROUP. All transmission stops. All busy lights out. All open line alarm, lamps lit. Monitor reperforators in idle line condition.	F-504	Replace fuse.
RECEIVER GROUP. All open line alarm lamps lit. No tape feed-out at end of message. Spare reperforator does not start when patched in. Receiving reperforators receive normally.	F-504	Replace fuse.
On polar operation only. Simulated idle line condition on receiving reperforator at distant station. (No spacing signals sent by transmitting line relay. Transmitter Group only.)	F-505	Replace fuse.

TABLE 5-8. SYMPTOMS OF FUSE FAILURE IN CONTROL PANEL SB-358/FGC

INDICATION	BLOWN FUSE	COMMENTS
OPEN LINE alarm lamp does not stay reset, but reperforator receives message. Reperforator does not feed out tape at end of message. SPARE reperforator motor does not start when it is patched into an operating circuit.	F-109	Replace fuse.

TABLE 5-9. SYMPTOMS OF FUSE FAILURE OF CONTROL PANEL 357/FGC

INDICATION	BLOWN FUSE	COMMENTS
CHANNEL BUSY lamp does not light. Tandem transmitters do not transmit. Numbering distributor-transmitter does not operate. OPEN LINE alarm lamp does not stay reset.	F-204	Replace fuse.

b. FUSE LOCATIONS.—Tables 5-10, 5-11, 5-12, 5-13, 5-14, and 5-15 give the fuse locations of the equipment. Refer also to figures 5-1, 5-2, 5-3, 5-4, 5-5, and 5-6.

TABLES 5-10. FUSE LOCATIONS IN RECEIVER GROUP

All are fusetrons except F-1908 and F-1916 which are fuses.

SYMBOL	LOCATION	PROTECTS	AMPS		VOLTS	PART NUMBER
			AN/FGC-38, 39	AN/FGC-38X		
F-1901	Left side wireway	Upper left reperforator	3.2		115	103284
F-1909				1.6		103286
F-1902	Right side wireway	Upper right reperforator	3.2		115	103284
F-1910				1.6		103286
F-1903	Left side wireway	Middle left reperforator	3.2		115	103284
F-1911				1.6		103286
F-1904	Right side wireway	Middle right reperforator	3.2		115	103284
F-1912				1.6		103286
F-1905	Left side wireway	Lower left reperforator	3.2		115	103284
F-1913				1.6		103286
F-1906	Right side wireway	Lower right reperforator	3.2		115	103284
F-1914				1.6		103286
F-1907 F-1915	Left side wireway	Convenience receptacle on front panel	3.2	3.2	115	103284
F-1908 F-1916	Left side wireway	Open line alarm lamps	1	1	115	80905

LEFT SIDE WIREWAY

ver Group Fuse Locations

TABLE 5-7. SYMPTOMS OF FUSE FAILURE IN POWER SUPPLY

INDICATION	BLOWN FUSE	COMMENTS
D-c pilot lamp does not light	F-501 and/or F-502	Each fuse is connected to one side of the line. If either fuse blows, the power supply is not energized. Replace blown fuse.
TRANSMITTER GROUP. Open line alarm lamp lit. Transmission stops. Busy lights remain lit. Monitor reperforators run open.	F-503	Replace fuse.
RECEIVER GROUP. Receiving reperforators run open.	F-503	Replace fuse.
TRANSMITTER GROUP. All transmission stops. All busy lights out. All open line alarm, lamps lit. Monitor reperforators in idle line condition.	F-504	Replace fuse.
RECEIVER GROUP. All open line alarm lamps lit. No tape feed-out at end of message. Spare reperforator does not start when patched in. Receiving reperforators receive normally.	F-504	Replace fuse.
On polar operation only. Simulated idle line condition on receiving reperforator at distant station. (No spacing signals sent by transmitting line relay. Transmitter Group only.)	F-505	Replace fuse.

TABLE 5-8. SYMPTOMS OF FUSE FAILURE IN CONTROL PANEL SB-358/FGC

INDICATION	BLOWN FUSE	COMMENTS
OPEN LINE alarm lamp does not stay reset, but reperforator receives message. Reperforator does not feed out tape at end of message. SPARE reperforator motor does not start when it is patched into an operating circuit.	F-109	Replace fuse.

TABLE 5-9. SYMPTOMS OF FUSE FAILURE OF CONTROL PANEL 357/FGC

INDICATION	BLOWN FUSE	COMMENTS
CHANNEL BUSY lamp does not light. Tandem transmitters do not transmit. Numbering distributor-transmitter does not operate. OPEN LINE alarm lamp does not stay reset.	F-204	Replace fuse.

b. FUSE LOCATIONS.—Tables 5-10, 5-11, 5-12, 5-13, 5-14, and 5-15 give the fuse locations of the equipment. Refer also to figures 5-1, 5-2, 5-3, 5-4, 5-5, and 5-6.

TABLES 5-10. FUSE LOCATIONS IN RECEIVER GROUP

All are fusetrons except F-1908 and F-1916 which are fuses.

SYMBOL	LOCATION	PROTECTS	AMPS		VOLTS	PART NUMBER
			AN/FGC-38, 39	AN/FGC-38X		
F-1901	Left side wireway	Upper left reperforator	3.2		115	103284
F-1909				1.6		103286
F-1902	Right side wireway	Upper right reperforator	3.2		115	103284
F-1910				1.6		103286
F-1903	Left side wireway	Middle left reperforator	3.2		115	103284
F-1911				1.6		103286
F-1904	Right side wireway	Middle right reperforator	3.2		115	103284
F-1912				1.6		103286
F-1905	Left side wireway	Lower left reperforator	3.2		115	103284
F-1913				1.6		103286
F-1906	Right side wireway	Lower right reperforator	3.2		115	103284
F-1914				1.6		103286
F-1907 F-1915	Left side wireway	Convenience receptacle on front panel	3.2	3.2	115	103284
F-1908 F-1916	Left side wireway	Open line alarm lamps	1	1	115	80905

NAVSHIPS 92378
AN/FGC-38, AN/FGC-38X, AN/FGC-39

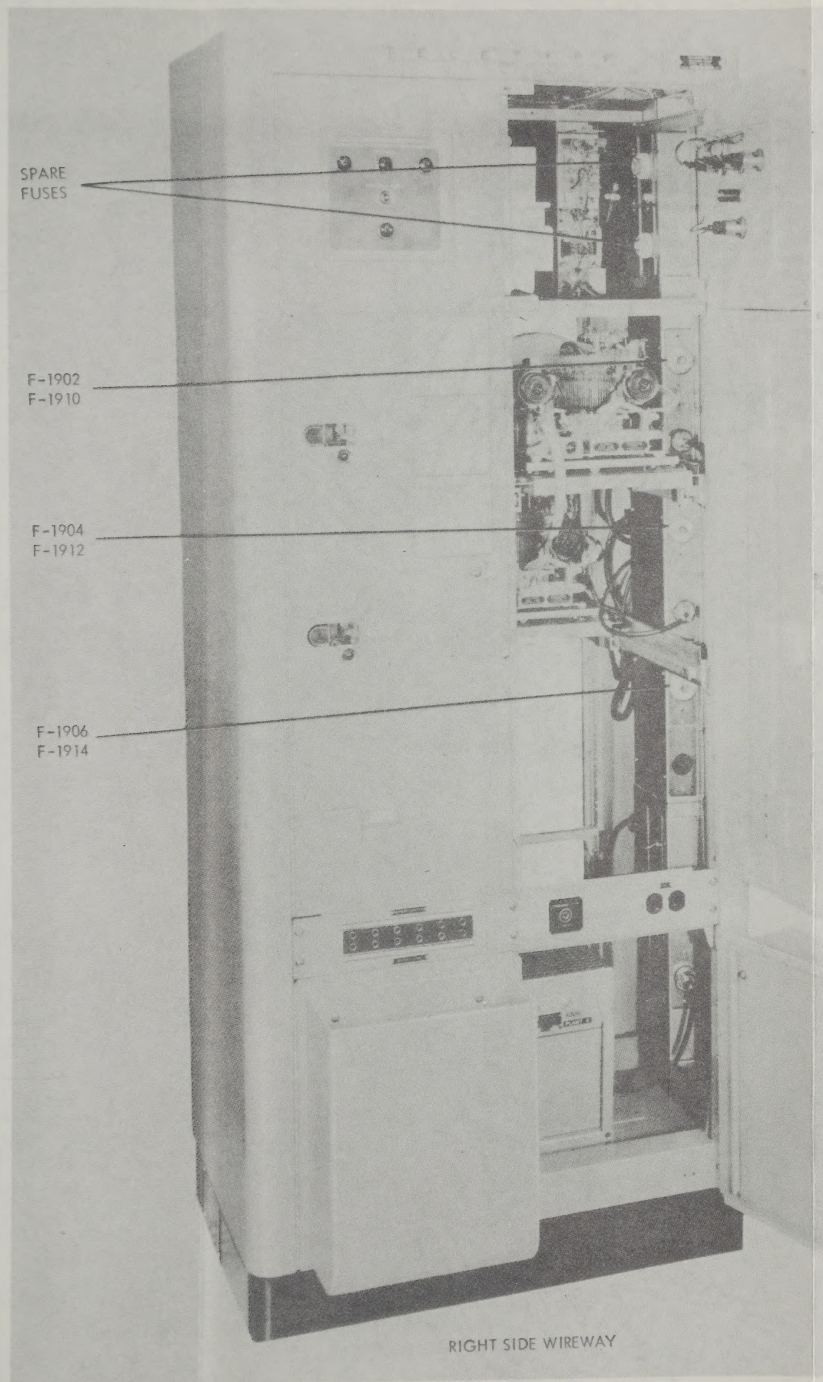

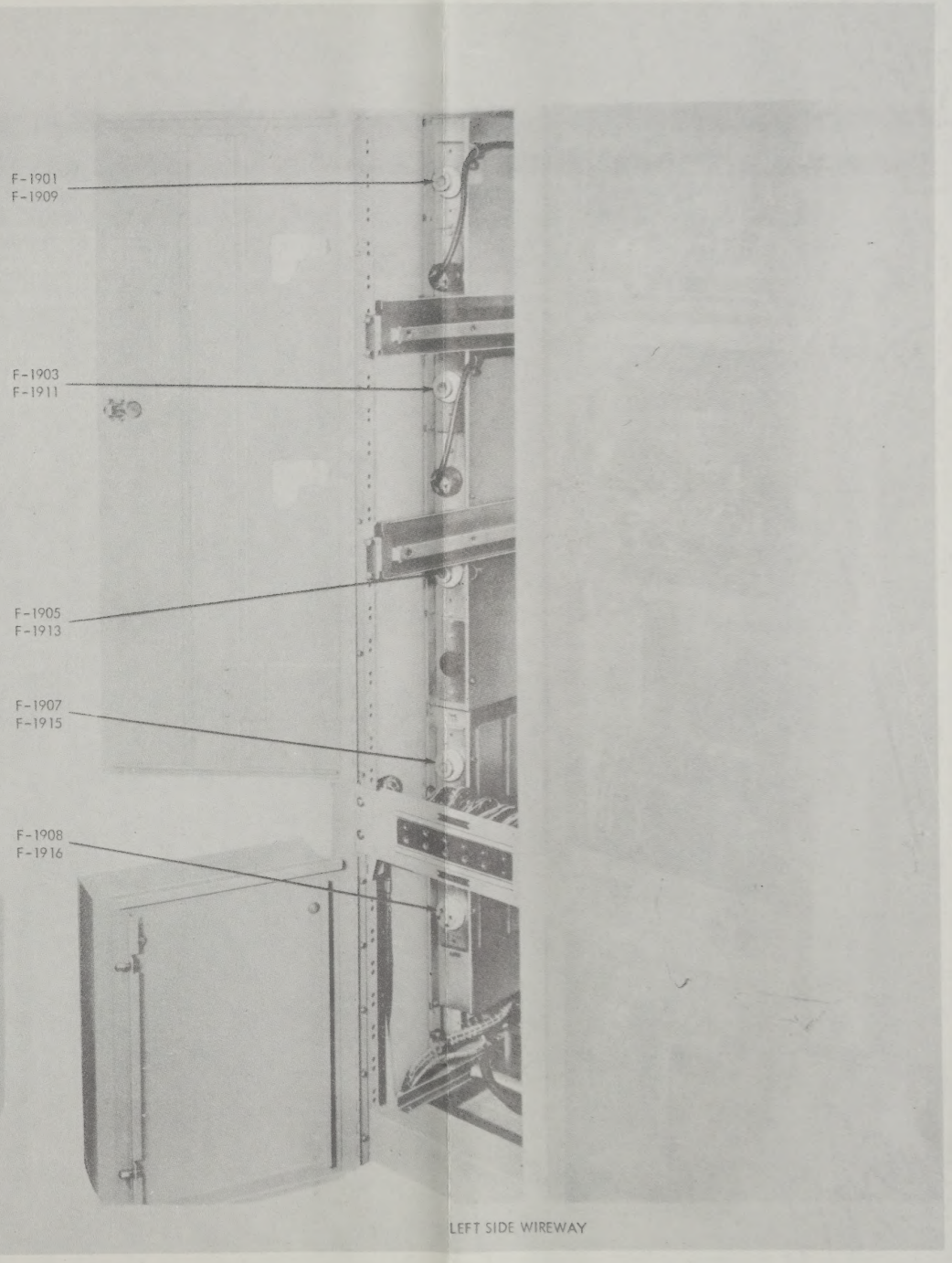

Figure 5—1. Receiver Group Fuse Locations

TABLES 5-11. FUSE LOCATIONS IN TRANSMITTER GROUP
All fusetrons

SYMBOL	LOCATION	PROTECTS	AMPS		VOLTS	PART NUMBER
			AN/FGC-38, 39	AN/FGC-38X		
F-2001	Wireway	Upper message-base motor	3.2		115	103284
F-2004				1.6		103286
F-2002	Wireway	Lower message-base motor	3.2		115	103284
F-2005				1.6		103286
F-2003	Wireway	Number-base motor	3.2		115	103284
F-2006				1.6		103286

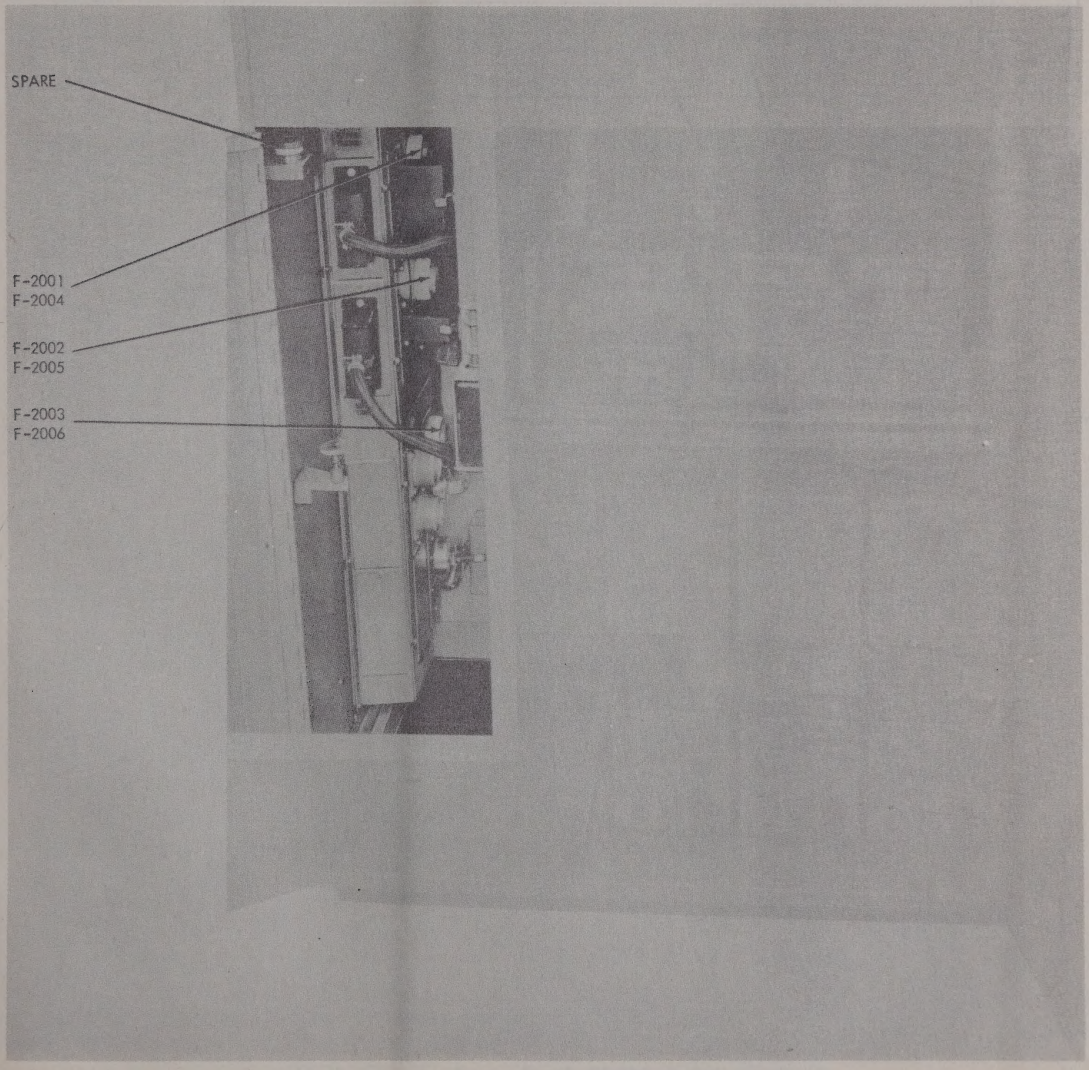

Figure 5–2. Transmitter Group Fuse Locations

NAVSHIPS 92378
AN/FGC-38, AN/FGC-38X, AN/FGC-39

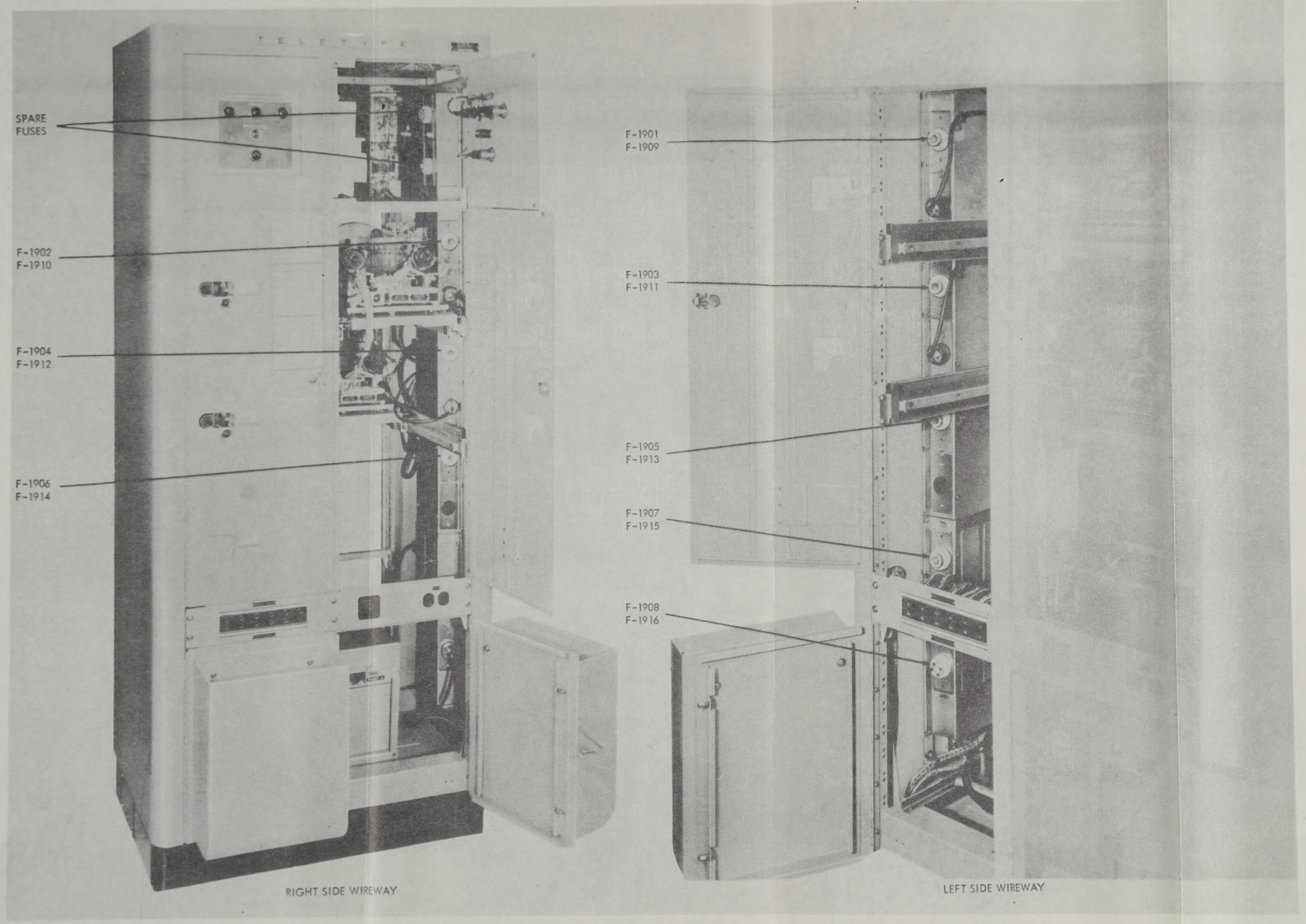

Figure 5–1. Receiver Group Fuse Locations

TABLES 5-11. FUSE LOCATIONS IN TRANSMITTER GROUP

All fusetrons

SYMBOL	LOCATION	PROTECTS	AMPS		VOLTS	PART NUMBER
			AN/FGC-38, 39	AN/FGC-38X		
F-2001	Wireway	Upper message-base motor	3.2		115	103284
F-2004				1.6		103286
F-2002	Wireway	Lower message-base motor	3.2		115	103284
F-2005				1.6		103286
F-2003	Wireway	Number-base motor	3.2		115	103284
F-2006				1.6		103286

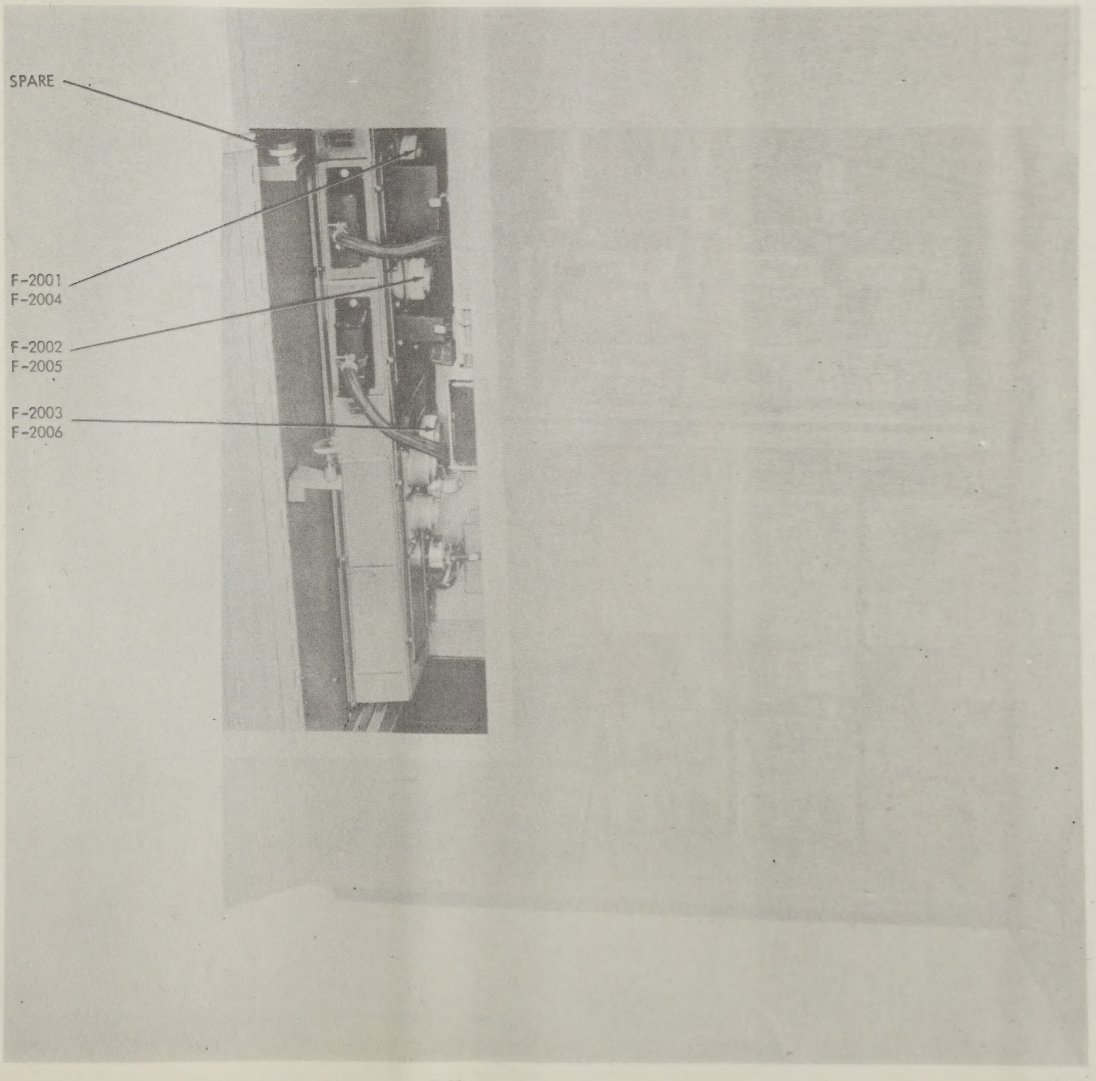

Figure 5—2. Transmitter Group Fuse Locations

TABLE 5-12. FUSE LOCATIONS IN MONITOR GROUP

All fusetrons

SYMBOL	LOCATION	PROTECTS	AMPS		VOLTS	PART NUMBER
			AN/FGC-38, 39	AN/FGC-38X		
F-301	Behind upper panel	Upper reperforator and reeling machine	4.0		115	129431
F-310				2.5		129830
F-302	Behind upper panel	Middle reperforator and reeling machine	4.0		115	129431
F-311				2.5		129830
F-303	Behind upper panel	Lower reperforator and reeling machine	4.0		115	129431
F-312				2.5		129830
F-305	Behind upper panel	Upper time stamp	1.6		115	103286

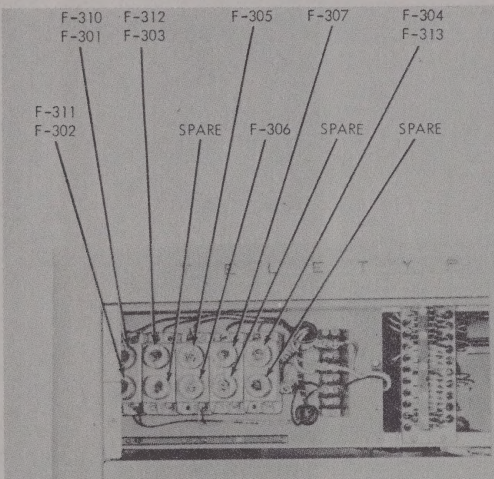

Figure 5—3. Monitor Group Fuse Locations

SYMBOL	LOCATION	PROTECTS	AMPS		VOLTS	PART NUMBER
			AN/FGC-38, 39	AN/FGC-38X		
F-306	Behind upper panel	Middle time stamp	1.6		115	103286
F-307	Behind upper panel	Lower time stamp	1.6		115	103286
F-304	Behind upper panel	Auxiliary and convenience receptacles	3.2		115	103284
F-313				1.6		103286

TABLE 5-13. FUSE LOCATIONS IN POWER SUPPLY

SYMBOL	LOCATION	PROTECTS	AMPS	VOLTS	NUMBERS
F-501	Front panel	A-C line	5 slo-blow	115	130506
F-502	Front panel	A-C line	5 slo-blow	115	130506
F-503	Front panel	Negative d-c (filtered)	2	115	120166
F-504	Front panel	Negative d-c (unfiltered)	2	115	120166
F-505	Front panel	Positive d-c (polar)	1/4	115	118510

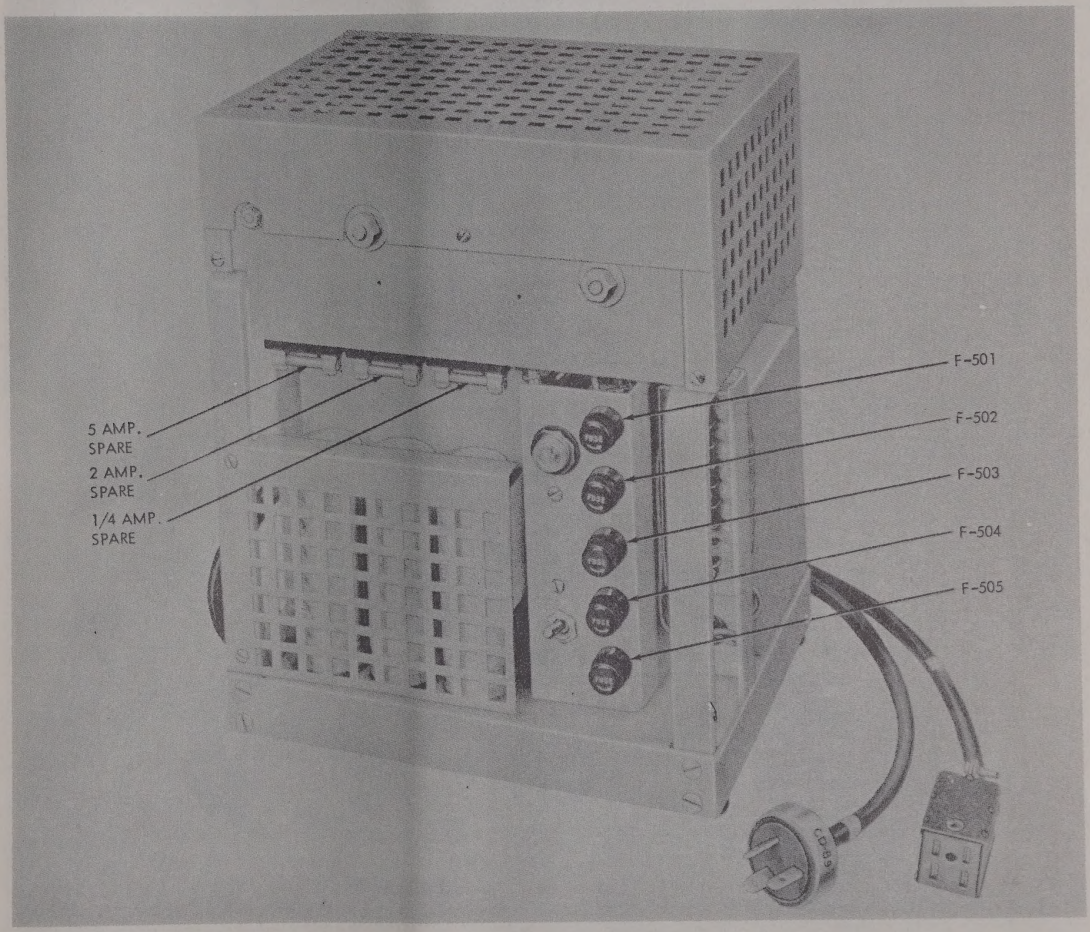

Figure 5—4. Power Supply PP-987/U, Fuse Locations

TABLE 5-14. FUSE LOCATIONS IN CONTROL PANEL SB-358/FGC

SYMBOL	LOCATION	PROTECTS	AMPS	VOLTS	NUMBERS
F-109	On front panel of control panel	K-101, K-102, K-103, and K-104	0.5	115	118511

Figure 5—5. Control Panel SB-358/FGC, Fuse Locations.

TABLE 5-15. FUSE LOCATIONS IN CONTROL PANEL SB-357/FGC

SYMBOL	LOCATION	PROTECTS	AMPS	VOLTS	NUMBERS
F-204	On front panel of control panel	K-202 (lower winding), K-203, K-204, K-205, K-207, K-208, and K-210	0.5	115	118511

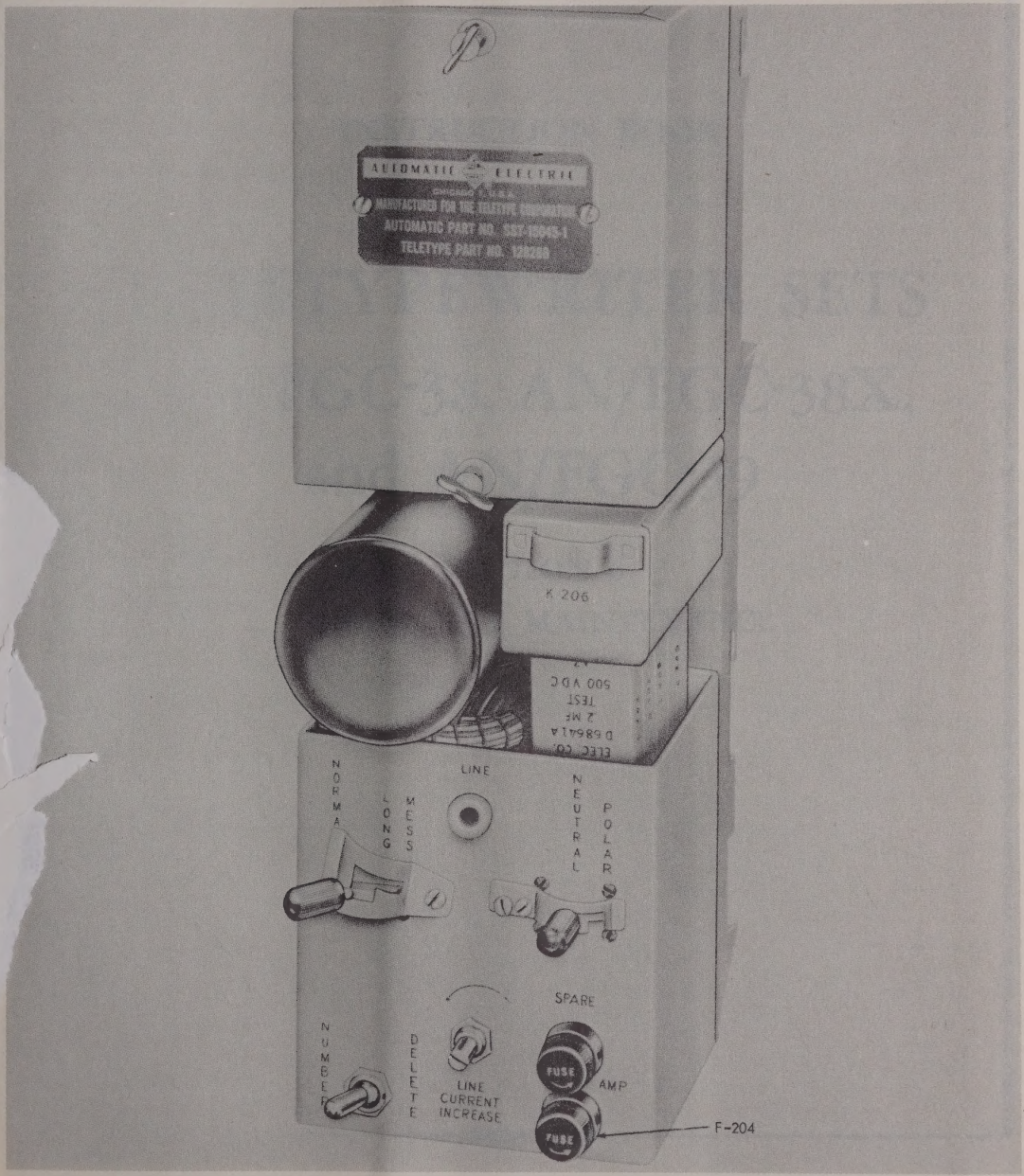

Figure 5—6. Control Panel SB-357/FGC, Fuse Locations

INSTRUCTION BOOK

for

TELETYPEWRITER SETS AN/FGC-38, AN/FGC-38X, and AN/FGC-39

SECTION 6

PREVENTIVE MAINTENANCE

TABLE OF CONTENTS

Paragraph		Page
1.	General	6-0
2.	Routine Maintenance Check Charts	6-1
a.	General	6-1
b.	Time Intervals	6-1
c.	Preventive Maintenance Procedure	6-1
d.	Preventive Maintenance Inspection (Typing Reperforator Out of Service)	6-1
e.	Distributor-Transmitter Units and Bases	6-2
	(1) Disassembly	6-2
	(2) Cleaning	6-3
f.	Time Stamp	6-3
	(1) Disassembly	6-3
	(2) Cleaning	6-3
3.	Lubrication	6-3

LIST OF ILLUSTRATIONS

Figure	Title	Page
6-1	Receiver Cabinet, Lubrication Points	6-5
6-2	Transmitter Cabinet, Lubrication Points	6-7
6-3	Monitor Cabinet, Lubrication Points	6-9
6-4	Reeling Machine RL-173/FGC, Lubrication Points	6-11
6-5	Synchronous Motor, Lubrication Data	6-13
6-6	Governed Motor, Lubrication Data	6-15
6-7	Mounting Base (Numbering), Lubrication Data	6-17
6-8	Mounting Base (Numbering), Lubrication Data	6-19
6-9	Mounting Base (Message), Lubrication Data	6-21
6-10	Reperforator, Lubrication Data	6-23
6-11	Reperforator, Lubrication Data	6-25
6-12	Reperforator, Lubrication Data	6-27
6-13	Reperforator, Lubrication Data	6-29
6-14	Reperforator, Lubrication Data	6-31
6-15	Reperforator, Lubrication Data	6-33
6-16	Reperforator, Lubrication Data	6-35
6-17	Distributor-Transmitter, Lubrication Data	6-37
6-18	Distributor-Transmitter, Lubrication Data	6-39
6-19	Distributor-Transmitter, Lubrication Data	6-41
6-20	Distributor-Transmitter, Lubrication Data	6-43
6-21	Distributor-Transmitter, Lubrication Data	6-45
6-22	Time Stamp, Lubrication Data	6-47
6-23	Time Stamp, Lubrication Data	6-49

LIST OF TABLES

Table	Title	Page
6-1	Routine Maintenance Check Chart	6-3

SECTION 6
PREVENTIVE MAINTENANCE

1. GENERAL.

a. Preventive maintenance is a systematic series of operations performed at regular intervals on equipment when the equipment is not in the operating circuit. Preventive maintenance operations are designed to eliminate major breakdowns and unwanted interruptions in service and to keep the equipment operating at top efficiency. To understand what is meant by preventive maintenance, it is necessary to distinguish it from trouble shooting and repair. The prime function of preventive maintenance is to prevent breakdowns, and therefore the need for repair. The importance of preventive maintenance cannot be overemphasized. The entire system of teletypewriter communication depends upon having each set in efficient operating condition when needed. It is vitally important that teletypewriter operators and repairmen maintain their equipment properly.

b. Most of the mechanical and electrical parts used in teletypewriter equipment require routine preventive maintenance. Those requiring maintenance differ in the amount and kind required. Because hit-or-miss maintenance techniques are not reliable, definite and specific instructions are needed. This section contains these specific instructions and serves as a guide for personnel assigned to perform the following maintenance operations.

(1) FEEL.—The feel operation is used most often to check rotating machinery, such as the motor, cams, and shafts, and to determine if electrical connections, bushings, etc., are overheated. Feeling indicates the need for lubrication or the existence of similar types of defects requiring correction. Many motors used in teletypewriter equipment operate at relatively high temperatures. The maintenance man must become familiar with the normal operating temperatures of the equipment in order to be able to recognize signs of overheating.

Note

It is important that the feel operation be performed as soon as possible after shutdown and always before any other maintenance is done.

(2) INSPECT.—Inspection is the most important operation in the preventive maintenance program. The inspector must know how to check for required clearances, tensions, and adjustments of the various assemblies. A careless observer will overlook the evidence of minor trouble. Although these minor defects may not interfere with performance of the equipment, valuable time and effort can be saved if they are corrected before they lead to major breakdowns. Make every effort to become thoroughly familiar with the indications of normal functioning in order to be able to recognize the signs of defective equipment. Inspection consists of carefully observing and checking with tools, gauges, etc. (when they are required), all parts of the equipment. Notice state of cleanliness, lubrication, amount of wear, adjustment and placement, tightness, clearance, tension, overheating, and moisture accumulation. Inspect for these conditions as follows:

(*a*) Cleanliness, by carefully examining all surfaces of the units for accumulation of dust, dirt, and excessive oil or grease. Parts, connections, and joints should be free of dust, corrosion, and other foreign matter. In tropical and high-humidity locations, look for fungus growth, mildew, and moisture accumulation.

(*b*) Inadequate or excessive lubrication.

(*c*) Excessive wear, as indicated by loose fittings, bearings, etc.

(*d*) Adjustment and placement, by determining that all mechanical and electrical parts are properly adjusted and in their original positions.

(*e*) Tightness, by testing any connection, assembly, or mounting that is normally fastened in a rigid position.

CAUTION

Before tightening any screws, bolts, or nuts, determine whether or not they are part of some adjustment. If so, tighten in accordance with detailed requirements and adjustment procedures given in Section 7 and check all related adjustments.

(*f*) Clearance between specified points, by feeling, sighting, or inserting gauges as specified for item inspected.

(*g*) Spring tensions, by using the appropriate special spring scale in the exact manner illustrated for each spring tension requirement. (See Section 7.)

(*b*) Overheating, as indicated by discoloration, blistering, or bulging of the parts or surface of the container; by leakage of insulating compounds; and by oxidation of metal contact surfaces.

(3) TIGHTEN.—This operation applies to soldered connections, bolts, screws, and fasteners holding items rigidly in place. Solder loose or broken soldered connections. Correct tightening procedure requires the use of the proper type and size of tools. Do not tighten screws, bolts, and nuts carelessly. Fittings tightened beyond the pressure for which they are designed will be damaged or broken.

CAUTION

Do not tighten parts or apparatus requiring clearance or tension adjustment.

(4) CLEAN.—This operation as applied to external surfaces of boxes, covers, panels, frames, etc., is the normal cleaning process.

(*a*) Cleaning equipment interiors including delicate electrical and mechanical parts requires detailed specific instructions. This cleaning is normally performed as part of the preventive maintenance routine.

(*b*) Items scheduled for cleaning in the check list need not be cleaned each time they are inspected. Under some conditions, however, it may be necessary to complete the cleaning of a unit before starting the other operations. Clean all parts only when inspection shows that it is necessary.

(5) ADJUST.—Adjustments are made only when they are necessary to restore normal operating conditions. Use extreme care in selecting the proper tools and gages before making adjustments. Many adjustments must be made in a particular sequence. EACH adjustment must meet ALL requirements for clearance, spring tension, speed, and other tolerance limits. If ONE adjustment is changed, ALL related adjustments must be checked. This check may involve a certain amount of duplication, but there are no practical short cuts when making over-lapping functional adjustments. Detailed instructions for specific requirements and adjustments are given in Section 7.

(6) LUBRICATE.—Lubrication refers to the application of oil or grease to all rotating shafts, bearings, cam rollers, sliding surfaces, and other moving parts. It may include the application of oil to metal surfaces or parts of the equipment. All lubrication should be performed as directed in figures 6-1 through 6-23, inclusive. These figures indicate the lubrication interval, the points to be lubricated, and the type and quantity of lubricant to be used. Use Teletype KS-7470 oil at all locations where oil is to be used. Use Teletype KS-7471 grease on all surfaces where grease is to be used.

2. ROUTINE, MAINTENANCE CHECK CHARTS.

(See table 6-1.)

a. GENERAL.—Time intervals for routine preventive maintenance will vary with operating conditions. Normal operation is based on operating conditions which prevail when the temperature is moderate and the air is relatively free of foreign matter and excessive moisture. When equipment is being operated in localities where there are extreme temperatures, excess moisture, dust, dirt, sand, or other adverse conditions, establish the routine schedules at whatever intervals necessary to keep the equipment in satisfactory operating condition.

b. TIME INTERVALS.—The following time intervals are recommended for equipment operating under normal conditions.

(1) Equipment in operation 8 or less hours daily.—Check every 30 days.

(2) Equipment in operation 8 to 12 hours daily.—Check every 15 days.

(3) Equipment in operation 12 to 24 hours daily.—Check every 10 days.

c. PREVENTIVE MAINTENANCE PROCEDURE.—The preventive maintenance procedure can be divided into two classes, work which can be completed while the teletypewriter set remains in service, and work which requires that the teletypewriter set be taken out of service.

(1) The first class of work is limited to the operations performed on the teletypewriter set exterior which is accessible while the teletypewriter is in service.

(2) The second class of work includes the operations which require the teletypewriter set be removed from service before the preventive maintenance work is started.

(3) Detailed information on the different individual test requirements and adjustments of complicated parts and mechanisms are given in Section 7.

(4) After all preventive maintenance work including lubrication has been completed and the teletypewriters have been assembled, make the following tests and adjustments on all reperforators.

(*a*) Motor speed (governed motors only — AN/FGC-38X).

(*b*) Rangefinder setting.

(*c*) Local operating tests.

Note

Always check related adjustments when any adjustment is made.

d. PREVENTIVE MAINTENANCE INSPECTION (TYPING REPERFORATOR OUT OF SERVICE).—For a thorough preventive maintenance inspection, the

typing reperforator must be taken out of service and partially disassembled.

(1) Disconnect the power and connecting cords.

(2) Remove the tape and ribbon from the reperforator unit.

(3) Remove all old grease and oil that have gathered dirt and dust.

CAUTION

Do not wipe dirty grease or other foreign matter into bearings.

(4) Loosen both rangefinder retaining screws. Remove the left-hand screw completely and slip the rangefinder off the remaining screw (with slotted screw hole). Clean the surface of the selector mechanism and rangefinder with a clean piece of cheesecloth.

(5) Flush the selector mechanism by pouring a small amount of dry-cleaning solvent between the separator plates. Repeat the flushing process if necessary.

(6) Inspect the unit for cracks, broken or missing parts, wear, binding, etc. Tighten any loose screws, bolts, nuts, etc., if they are not part of some adjustment. Lubricate in accordance with lubrication diagrams. Make all necessary adjustments in accordance with detailed requirements in Section 7.

(7) Clean the type basket as follows:

(*a*) Insert a pad of cheesecloth between the type bars and backstop to catch the dirt and excess cleaning fluid.

(*b*) Wipe the faces of the type-bar pallets with a piece of cheesecloth moistened in dry-cleaning solvent. After the pallets are dry, brush them with a dry typewriter brush. Repeat the process if necessary. Flush the segment slots with dry-cleaning solvent.

(*c*) Inspect the type basket for missing or broken parts. Check each type bar to determine that all parts move freely and are not bent or broken. Check for broken or distorted springs, tighten all loose parts that are not involved in an adjustment. Lubricate in accordance with the lubrication diagrams. Make all required adjustments in accordance with detailed instructions in Section 7.

(8) Normally the motor unit will not be removed from the reperforator during preventive maintenance routines.

(*a*) Check for broken or missing parts. Feel the motor while it is in service to determine if it is overheated. If the motor is not in service or has been idle, it should be run from 5 to 10 minutes and then checked for overheating.

(*b*) Tighten any loose bolts, screws, nuts, etc., which are not part of an adjustment. Clean the outer surfaces of the motor with a dry cloth. Remove the motor brushes (governed motor) and check to see that at least 5/16 inch of brush material remains. Clean the brushes and the inside of the brush holder with a cloth moistened with dry-cleaning solvent.

Note

Mark the brushes upon removal in order to facilitate replacing the brush into its proper brush holder after cleaning.

CAUTION

Do not take the governor apart for cleaning unless absolutely necessary.

(*c*) Lubricate the motor in accordance with the lubrication diagram and make the necessary adjustments as detailed in Section 7.

e. DISTRIBUTOR - TRANSMITTER UNITS AND BASES.—Lubricate the units as shown in the lubrication diagrams. Do not attempt to lubricate the equipment with the motor running. Do not apply lubricants in excess of the quantities recommended, and wipe off excess oil.

(1) DISASSEMBLY.

(*a*) Disconnect the power and line cords from the cabinet and place the bases on a bench or other suitable place.

(*b*) Remove the motor cover and the base front cover by unscrewing the retaining screws. Do not remove the screws that secure the top plates of the individual distributor-transmitter units.

(*c*) For more working room, the individual distributor-transmitter units may be removed from the base by removing the mounting screws that secure each to the base, slide each unit out of the base.

(*d*) Remove the cam left side support bracket by unscrewing the mounting bracket screw on the side of the unit.

(*e*) Disconnect the tape-out operating lever spring and the selector lever bail spring. Remove the two screws that fasten the contact bracket to the bottom plate. Access to these screws is from the underside of the bottom plate. Swing the contact bracket assembly free, taking care not to put stress on the connecting wires.

(*f*) When further disassembly is required for cleaning the unit, remove the bottom plate. This can be accomplished by removing the top plate screw that secures the post to which the filter assembly is fastened. Disconnect the feed-pawl and armature springs. Turn the unit bottom-side up and remove the screws which fasten the side frames to the bottom plate. Remove the screw that fastens the post to the bottom plate (do not remove the screw which fastens the post to which the filter assembly is attached). Carefully ease top and bottom sections apart.

(*g*) Further disassembly of individual parts may now be accomplished if desired. However, if care is exercised in cleaning, further disassembly is not necessary. Be careful not to get the cleaning fluid on the magnet coils or filter units or on any of the wiring.

(2) CLEANING.—To clean the unit use a clean cloth, brush, and solvent. Wipe off all accessible grease and oil with a cloth dampened in solvent. Clean the places that are not accessible to the cloth by brushing and flushing (use care when flushing). Wipe dry with a clean cloth. Reassemble the unit in the reverse order that is was disassembled. Check the adjustments (see Section 7). Lubricate the units as indicated in the lubrication diagrams.

Use a cloth, brush, and solvent to clean the base and mainshaft gears and bearings. Remove the two felt wicks in the bearing oil holes and clean and rinse the wicks in the cleaning fluid. Allow the wicks to dry and replace them in their holes. Be careful not to get any cleaning solvent on the slip connectors mounted in the base. Lubricate the bases as indicated in the lubrication diagrams.

f. TIME STAMP.—Lubricate the time stamp as shown in the diagrams. Do not attempt to lubricate the equipment with the motor running. Do not apply lubricants in excess of the quantities recommended; wipe off excess oil.

(1) DISASSEMBLY.—Remove and disassemble the unit as follows:

(*a*) Pull out the sliding shelf, remove the power cord from the wireway, and remove the time stamp from the shelf.

(*b*) Remove the cover mounting screw and cover. Further disassembly is not necessary for cleaning.

(*c*) After cleaning, replace the cover and install time stamp in cabinet. Reset the time stamp as described in Section 3.

(2) CLEANING.—To clean the unit, refer to paragraph 2*e*(2).

3. LUBRICATION.

Lubricate the equipment as shown in figures 6-1 through 6-23 inclusive. These figures indicate the lubrication interval, the points to be lubricated, and the quantity of lubricants to be used.

TABLE 6–1. ROUTINE MAINTENANCE CHECK CHART

WHAT TO CHECK	HOW TO CHECK	PRECAUTIONS
Exterior of teletypewriter set	Check for dirt, cracked or chipped enamel; loose or missing bolts, nuts, screws, etc.; bent, rusted, or damaged door latches, rollers, and sliding surfaces on shelves; broken, cracked, or damaged windows. Rotate the tape reels to see that they move freely. Tighten all loose screws on the exterior of the cabinet; replace any missing. Tighten all switch mountings and knobs. Wipe off excess oil, dirt, moisture, etc., with a clean, dry, cloth. Lubricate rollers and sliding surfaces of the shelves.	Do not over-tighten screws, nuts, bolts, etc. Wipe off all excessive lubricant. Refer to Section 7 for detailed instructions for making any necessary adjustments.
Interior of console	Clean all dirt, dust, etc., from the interior using a brush and clean cloth. Inspect the interior for loose, damaged or missing parts.	Make sure all power is disconnected before cleaning. Protect the various units housed in the console from dirt, etc., falling off the interior.
Cords, cables, and plugs	Inspect cords and cables for cracked or deteriorated insulation, frayed or cut insulation at connecting points, excessive strains on the wires or connections. Inspect the plugs and sockets for dirt, rust, corrosion, and cracked or damaged shells. Remove the plug shells and sockets and tighten the connections. Tighten the connections on the power cords. Check all connections on terminal blocks for tightness. Clean grease, oil, and moisture from cords, plugs and sockets with a clean, dry cloth. Clean corrosion or stains from plugs with metal polish. Be sure to remove all residue of the polish after cleaning.	Disconnect all power *before cleaning*. Protect units in cabinets from dirt, etc., which is removed from the wiring.
Fuses	Inspect the fuses and fuse holders for dirt, dust, and corrosion. Check for burned out fuses. Clean the fuses and fuse holders with a sash brush. Remove corrosion on the fuse or fuse holder with #0000 sandpaper or crocus cloth and wipe clean with a dry cloth.	Make sure all power is disconnected *before cleaning*. Protect units in cabinets from dirt, etc., falling off the fuses.
Equipment shelf	Inspect for excessive dirt, cracks, missing or broken parts, bent, rusted, or damaged sliding surfaces, worn or damaged mountings. Tighten all loose screws, bolts and nuts. Clean the surfaces with a clean rag dampened with dry-cleaning solvent. Oil may be used to remove rust spots from the metal surfaces. Lubricate moving parts in accordance with lubrication diagrams.	Protect units which may be exposed to dirt, etc., falling from the shelf.

TABLE 6—1. ROUTINE MAINTENANCE CHECK CHART—Continued

WHAT TO CHECK	HOW TO CHECK	PRECAUTIONS
Reeling machine	Inspect the housing for excess dirt, missing, or broken parts. Tighten all mounting screws on the exterior of the unit, replace any missing screws. Clean excessive oil, dirt, moisture, etc., with a clean, dry cloth. Adjust the reeling machine as described in Section 7. Lubricate the unit in accordance with the lubrication diagrams.	Disconnect power source while performing maintenance operations.
Reeling machine motor	Check for cracks or other damage to the motor. Check for loose, broken, or missing mounting screws. Feel the motor to make sure it is not overheating. Clean the outside of the motor with a clean, dry cloth. Do not remove the motor from the reeling machine. Lubricate in accordance with the lubrication diagrams.	Disconnect the power source before performing maintenance operations. Motor normally runs hot.
Terminal blocks	Inspect terminal blocks for loose connections and mounting screws, cracks, breaks, and dirt. Carefully examine the connections for mechanical defects, dirt, and corrosion. Tighten loose screws, bolts, and mounting lugs. Remove and clean dirty or corroded connections before tightening. Clean terminal block with a dry brush. Use cleaning solvent if necessary and then wipe with a clean, dry cloth followed by a brush to remove all lint.	Disconnect all power before performing maintenance operations. Protect any units which might be exposed to dirt, etc., brushed from the terminal blocks.
Wiring	Inspect for cracked, frayed, or torn insulation. Check for loose connections, dirty contacts, and faulty lacing. Check for wires which may be bearing on moving parts. Be sure the ground connection is clean and tight. Tighten all loose screw connections. Resolder loose or broken solder connections. Place all wiring in the proper place and retie if necessary. (Soldering will be done by an experienced repairman.) Clean all moisture, oil, grease, etc., from wiring with a clean dry cloth. Clean all connections before reconnecting.	Disconnect power before performing the maintenance operation.
Rectifier	Inspect for dirt, dust, and gummy deposits. Check fuses, cords, plugs, sockets, terminals, and leads on the tap-changing panels. Investigate any odor of burning insulation or excessive heating of parts. Remove any strap, wire, or other device used to strap a blown fuse. Tighten any loose mounting screws and bolts, but DO NOT tighten the drawbolt of a stack-type rectifier unit. Tighten the screws on the tap-changing panel. Solder any loose or broken connections. Bend the prongs on the power plugs to insure a tight fit in the sockets. Clean the exterior of the unit with a clean cloth and dry-cleaning solvent. Remove any foreign material from between the rectifier disks. Use a small camel's hair touch-up brush about one inch wide. Clean foreign matter from all other parts with a stiff brush. Test the rectifier for output voltage. (See Section 7.) Before changing the leads on the tap-changing panel to provide the proper output voltage, check the a-c line voltage to be sure it is not temporarily higher or lower than normal. (See Section 7.)	Disconnect power supply before performing maintenance operations. Do not clean rectifier disks unless absolutely necessary. Refer to Section 7 for detailed instructions for texting and adjusting rectifier.
Switches	Inspect the mechanical action of each switch and look for dirt and corrosion on all exposed parts. Operate the switch and note the amount of spring tension and freedom of movement. Check the contacts for corrosion. Do not confuse brown or black stains for corrosion. Inspect for loose or dirty connections. Clean the switch with a stiff brush and dry-cleaning solvent. Clean corroded contacts with #0000 sandpaper. If contacts have deep pits from burning or arcing, repair in accordance with Section 7.	Disconnect power source before performing maintenance operations. Refer to Section 7 for detailed instructions for repairing switches.
Rangefinder setting	Refer to Section 3.	
Reperforator units	See paragraph 2*d* of this section.	
Motor units	See paragraph 2*d* of this section.	
Distributor-transmitters and bases	See paragraph 2*e* of this section.	
Time stamp	See paragraph 2*f* of this section.	

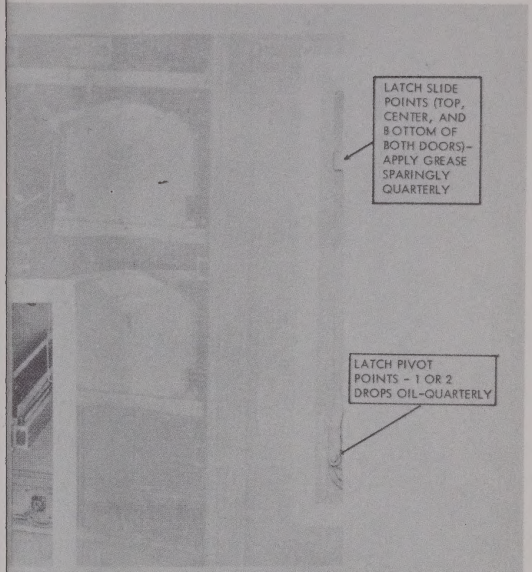
LATCH SLIDE POINTS (TOP, CENTER, AND BOTTOM OF BOTH DOORS)- APPLY GREASE SPARINGLY QUARTERLY
LATCH PIVOT POINTS - 1 OR 2 DROPS OIL-QUARTERLY

AUTION: Wipe off excessive lubricant. Do not distort or disturb springs.

OTE: 1. Use type KS-7470 oil for normal or high temperature -5° to 55° C. (41° to 131° F.). For lower temperatures, dilute the KS-7470 with kerosene (half and half).

NAVY LUBRICANT		STANDARD NAVY STOCK NUMBER				
PECIFI-ATION	TITLE	1 PT.	1 QT.	1 GAL.	4 OZS.	1 LB.
letype S-7470	Lubricating oil	N17-T-350011-463	N17-T-350002-698	N17-T-350009-698		
letype S-7471	Lubricating grease				N17-T-350010-757	N17-T-350012-460

TABLE 6–1. ROUTINE MAINTENANCE CHECK CHART—Continued

WHAT TO CHECK	HOW TO CHECK	PRECAUTIONS
Reeling machine	Inspect the housing for excess dirt, missing, or broken parts. Tighten all mounting screws on the exterior of the unit, replace any missing screws. Clean excessive oil, dirt, moisture, etc., with a clean, dry cloth. Adjust the reeling machine as described in Section 7. Lubricate the unit in accordance with the lubrication diagrams.	Disconnect power source while performing maintenance operations.
Reeling machine motor	Check for cracks or other damage to the motor. Check for loose, broken, or missing mounting screws. Feel the motor to make sure it is not overheating. Clean the outside of the motor with a clean, dry cloth. Do not remove the motor from the reeling machine. Lubricate in accordance with the lubrication diagrams.	Disconnect the power source before performing maintenance operations. Motor normally runs hot.
Terminal blocks	Inspect terminal blocks for loose connections and mounting screws, cracks, breaks, and dirt. Carefully examine the connections for mechanical defects, dirt, and corrosion. Tighten loose screws, bolts, and mounting lugs. Remove and clean dirty or corroded connections before tightening. Clean terminal block with a dry brush. Use cleaning solvent if necessary and then wipe with a clean, dry cloth followed by a brush to remove all lint.	Disconnect all power before performing maintenance operations. Protect any units which might be exposed to dirt, etc., brushed from the terminal blocks.
Wiring	Inspect for cracked, frayed, or torn insulation. Check for loose connections, dirty contacts, and faulty lacing. Check for wires which may be bearing on moving parts. Be sure the ground connection is clean and tight. Tighten all loose screw connections. Resolder loose or broken solder connections. Place all wiring in the proper place and retie if necessary. (Soldering will be done by an experienced repairman.) Clean all moisture, oil, grease, etc., from wiring with a clean dry cloth. Clean all connections before reconnecting.	Disconnect power before performing the maintenance operation.
Rectifier	Inspect for dirt, dust, and gummy deposits. Check fuses, cords, plugs, sockets, terminals, and leads on the tap-changing panels. Investigate any odor of burning insulation or excessive heating of parts. Remove any strap, wire, or other device used to strap a blown fuse. Tighten any loose mounting screws and bolts, but DO NOT tighten the drawbolt of a stack-type rectifier unit. Tighten the screws on the tap-changing panel. Solder any loose or broken connections. Bend the prongs on the power plugs to insure a tight fit in the sockets. Clean the exterior of the unit with a clean cloth and dry-cleaning solvent. Remove any foreign material from between the rectifier disks. Use a small camel's hair touch-up brush about one inch wide. Clean foreign matter from all other parts with a stiff brush. Test the rectifier for output voltage. (See Section 7.) Before changing the leads on the tap-changing panel to provide the proper output voltage, check the a-c line voltage to be sure it is not temporarily higher or lower than normal. (See Section 7.)	Disconnect power supply before performing maintenance operations. Do not clean rectifier disks unless absolutely necessary. Refer to Section 7 for detailed instructions for texting and adjusting rectifier.
Switches	Inspect the mechanical action of each switch and look for dirt and corrosion on all exposed parts. Operate the switch and note the amount of spring tension and freedom of movement. Check the contacts for corrosion. Do not confuse brown or black stains for corrosion. Inspect for loose or dirty connections. Clean the switch with a stiff brush and dry-cleaning solvent. Clean corroded contacts with #0000 sandpaper. If contacts have deep pits from burning or arcing, repair in accordance with Section 7.	Disconnect power source before performing maintenance operations. Refer to Section 7 for detailed instructions for repairing switches.
Rangefinder setting	Refer to Section 3.	
Reperforator units	See paragraph 2*d* of this section.	
Motor units	See paragraph 2*d* of this section.	
Distributor-transmitters and bases	See paragraph 2*e* of this section.	
Time stamp	See paragraph 2*f* of this section.	

NAVSHIPS 92378
AN/FGC-38, AN/FGC-38X, AN/FGC-39

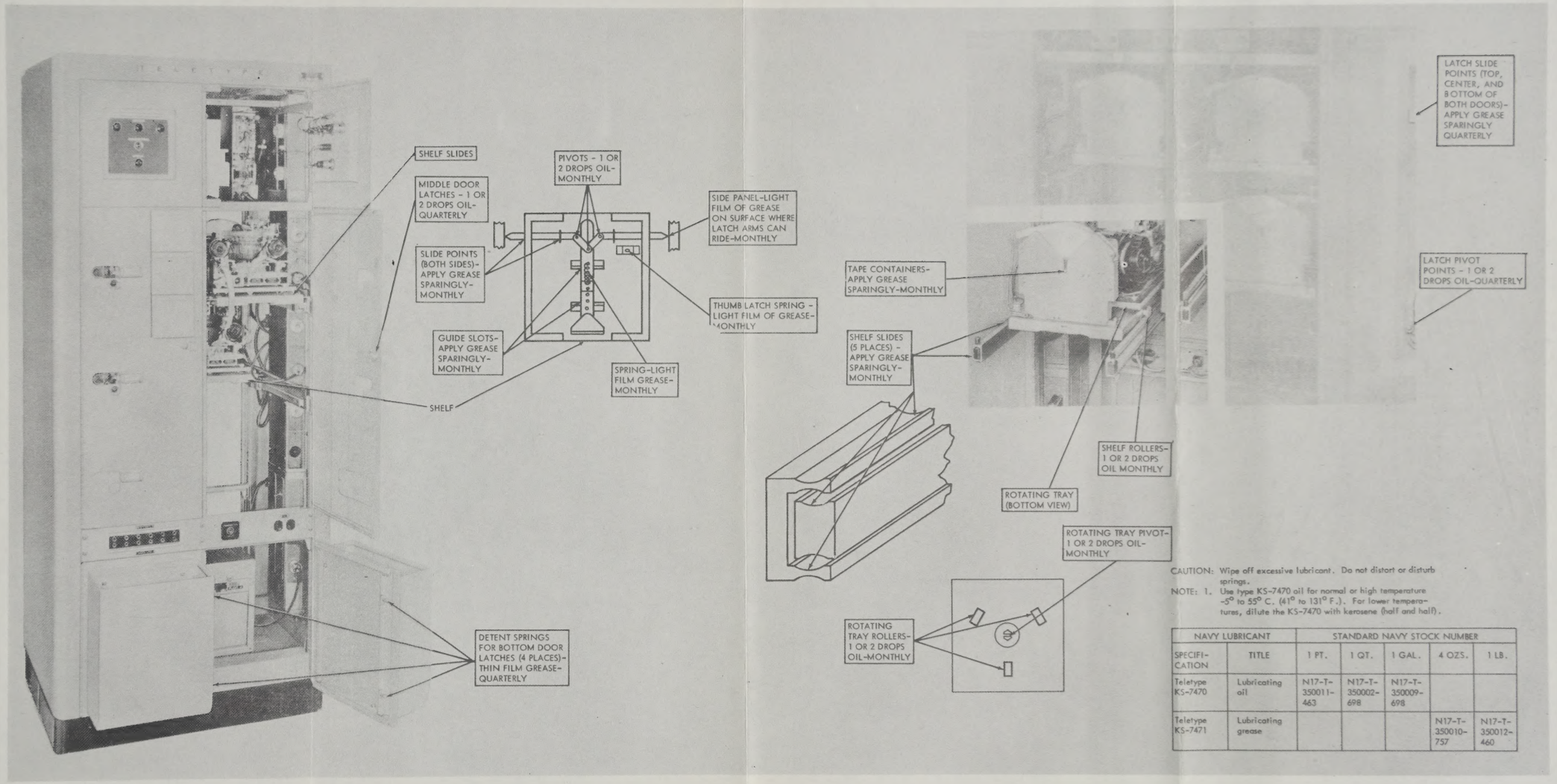
SHELF SLIDES
MIDDLE DOOR LATCHES - 1 OR 2 DROPS OIL-QUARTERLY
SLIDE POINTS (BOTH SIDES)-APPLY GREASE SPARINGLY-MONTHLY
GUIDE SLOTS-APPLY GREASE SPARINGLY-MONTHLY
SHELF
DETENT SPRINGS FOR BOTTOM DOOR LATCHES (4 PLACES)-THIN FILM GREASE-QUARTERLY
PIVOTS - 1 OR 2 DROPS OIL-MONTHLY
SIDE PANEL-LIGHT FILM OF GREASE ON SURFACE WHERE LATCH ARMS CAN RIDE-MONTHLY
THUMB LATCH SPRING - LIGHT FILM OF GREASE-MONTHLY
SPRING-LIGHT FILM GREASE-MONTHLY
LATCH SLIDE POINTS (TOP, CENTER, AND BOTTOM OF BOTH DOORS)-APPLY GREASE SPARINGLY QUARTERLY
LATCH PIVOT POINTS - 1 OR 2 DROPS OIL-QUARTERLY
TAPE CONTAINERS-APPLY GREASE SPARINGLY-MONTHLY
SHELF SLIDES (5 PLACES) - APPLY GREASE SPARINGLY-MONTHLY
SHELF ROLLERS-1 OR 2 DROPS OIL MONTHLY
ROTATING TRAY (BOTTOM VIEW)
ROTATING TRAY PIVOT-1 OR 2 DROPS OIL-MONTHLY
ROTATING TRAY ROLLERS-1 OR 2 DROPS OIL-MONTHLY

CAUTION: Wipe off excessive lubricant. Do not distort or disturb springs.

NOTE: 1. Use type KS-7470 oil for normal or high temperature -5° to 55° C. (41° to 131° F.). For lower temperatures, dilute the KS-7470 with kerosene (half and half).

NAVY LUBRICANT		STANDARD NAVY STOCK NUMBER				
SPECIFICATION	TITLE	1 PT.	1 QT.	1 GAL.	4 OZS.	1 LB.
Teletype KS-7470	Lubricating oil	N17-T-350011-463	N17-T-350002-698	N17-T-350009-698		
Teletype KS-7471	Lubricating grease				N17-T-350010-757	N17-T-350012-460

Figure 6–1. Receiver Cabinet, Lubrication Points

-5° to 55° C. (41° to 131° F.). For lower temperatures, dilute the KS-7470 with kerosene (half and half).

NAVY LUBRICANT		STANDARD NAVY STOCK NUMBER				
SPECIFICATION	TITLE	1 PT.	1 QT.	1 GAL.	4 OZS.	1 LB.
Teleype KS-7470	Lubricating oil	N17-T-350011-463	N17-T-350002-698	N17-T-350009-698		
Teleype KS-7471	Lubricating grease				N17-T-350010-757	N17-T-350012-460

NAVSHIPS 92378
AN/FGC-38, AN/FGC-38X, AN/FGC-39

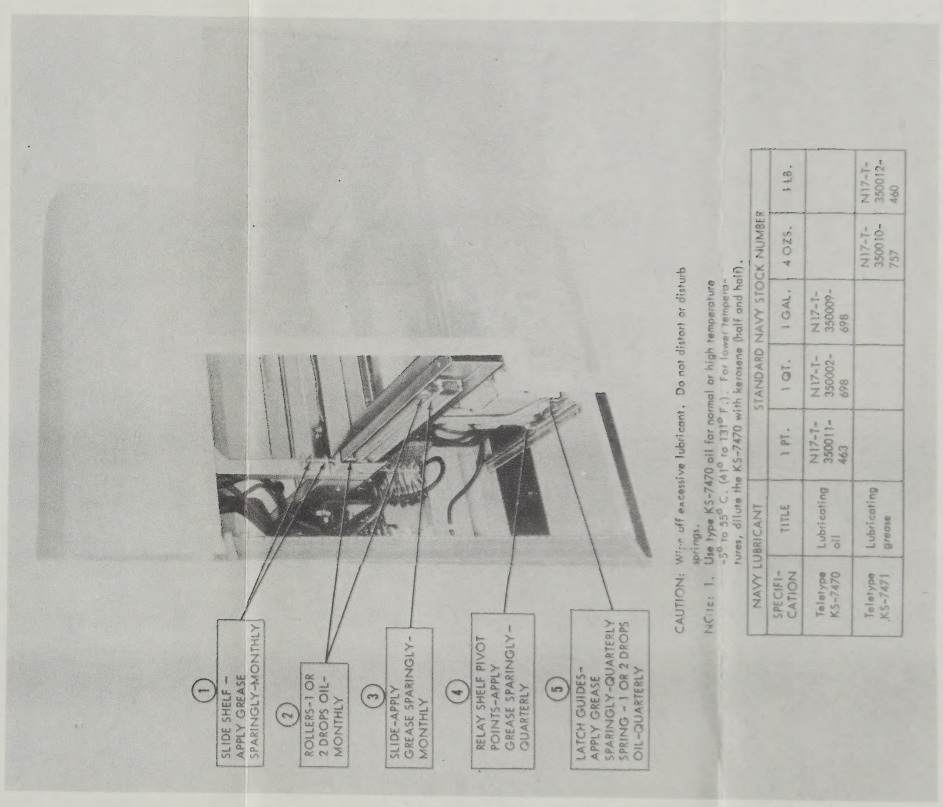
1 SLIDE SHELF – APPLY GREASE SPARINGLY-MONTHLY
2 ROLLERS-1 OR 2 DROPS OIL-MONTHLY
3 SLIDE-APPLY GREASE SPARINGLY-MONTHLY
4 RELAY SHELF PIVOT POINTS-APPLY GREASE SPARINGLY-QUARTERLY
5 LATCH GUIDES-APPLY GREASE SPARINGLY-QUARTERLY SPRING – 1 OR 2 DROPS OIL-QUARTERLY
CAUTION: Wipe off excessive lubricant. Do not distort or disturb springs.
NOTES: 1. Use type KS-7470 oil for normal or high temperature (-5° to 55° C. (41° to 131° F.). For lower temperatures, dilute the KS-7470 with kerosene (half and half).

NAVY LUBRICANT		STANDARD NAVY STOCK NUMBER				
SPECIFICATION	TITLE	1 PT.	1 QT.	1 GAL.	4 OZS.	1 LB.
Teletype KS-7470	Lubricating oil	N17-T-350011-463	N17-T-350002-698	N17-T-350009-698	N17-T-350010-757	N17-T-350012-460
Teletype KS-7471	Lubricating grease					

Figure 6–2. Transmitter Cabinet, Lubrication Points

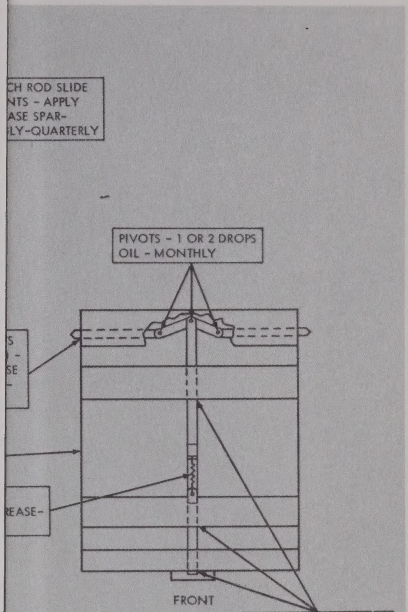

: Wipe off excessive lubricant. Do not distort or disturb springs.
. Use type KS-7470 oil for normal or high temperature -5° to 55° C. (41° to 131° F.). For lower temperatures, dilute the KS-7470 with kerosene (half and half).

Y LUBRICANT	STANDARD NAVY STOCK NUMBER				
TITLE	1 PT.	1 QT.	1 GAL.	4 OZS.	1 LB.
Lubricating oil	N17-T-350011-463	N17-T-350002-698	N17-T-350009-698		
Lubricating grease				N17-T-350010-757	N17-T-350012-460

NAVSHIPS 92378
AN/FGC-38, AN/FGC-38X, AN/FGC-39

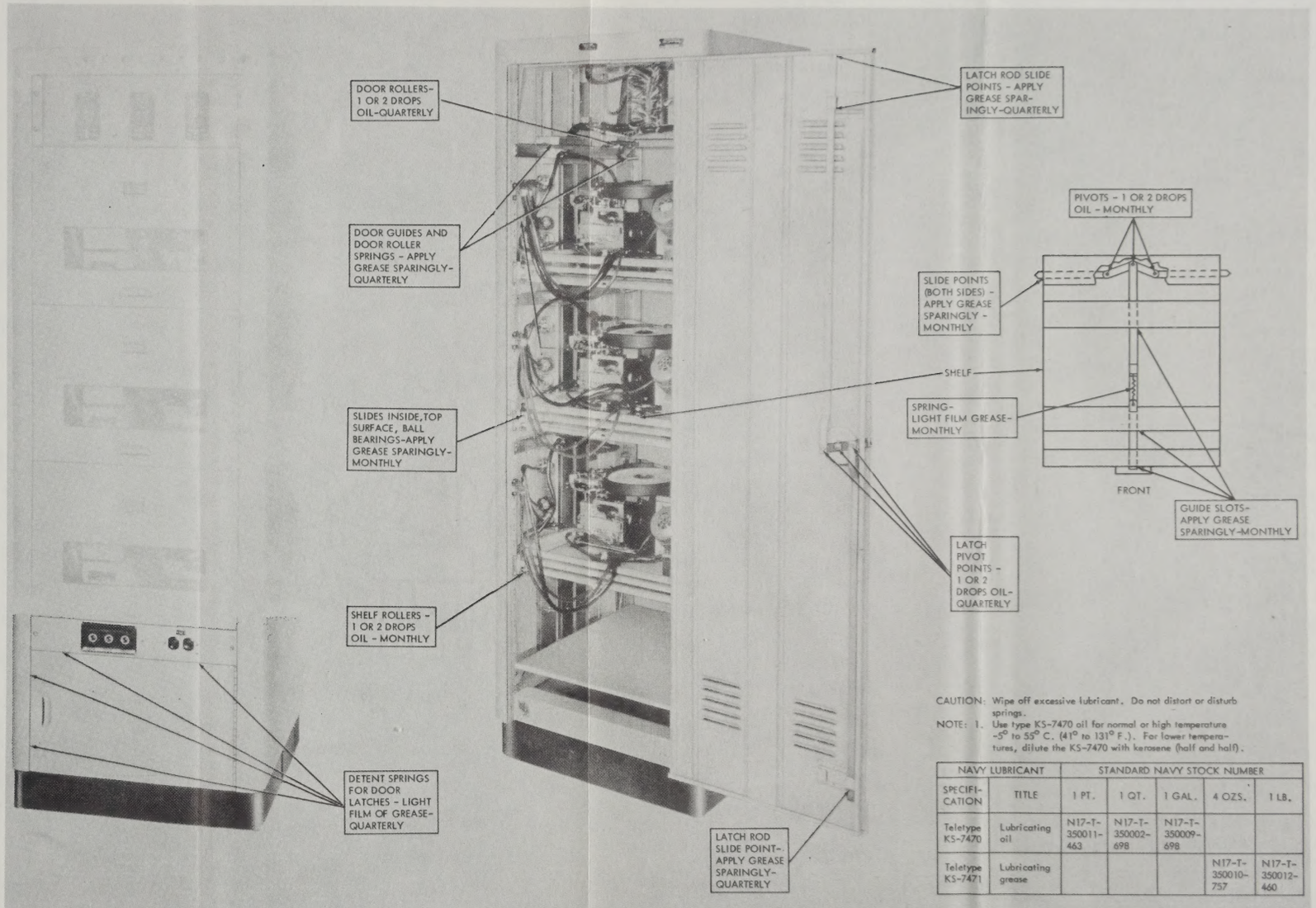
DOOR ROLLERS - 1 OR 2 DROPS OIL-QUARTERLY
DOOR GUIDES AND DOOR ROLLER SPRINGS - APPLY GREASE SPARINGLY-QUARTERLY
SLIDES INSIDE, TOP SURFACE, BALL BEARINGS-APPLY GREASE SPARINGLY-MONTHLY
SHELF ROLLERS - 1 OR 2 DROPS OIL - MONTHLY
DETENT SPRINGS FOR DOOR LATCHES - LIGHT FILM OF GREASE-QUARTERLY
LATCH ROD SLIDE POINTS - APPLY GREASE SPARINGLY-QUARTERLY
LATCH ROD SLIDE POINT-APPLY GREASE SPARINGLY-QUARTERLY
PIVOTS - 1 OR 2 DROPS OIL - MONTHLY
SLIDE POINTS (BOTH SIDES) - APPLY GREASE SPARINGLY - MONTHLY
SHELF
SPRING-LIGHT FILM GREASE-MONTHLY
FRONT
GUIDE SLOTS-APPLY GREASE SPARINGLY-MONTHLY
LATCH PIVOT POINTS - 1 OR 2 DROPS OIL-QUARTERLY

CAUTION: Wipe off excessive lubricant. Do not distort or disturb springs.

NOTE: 1. Use type KS-7470 oil for normal or high temperature -5° to 55° C. (41° to 131° F.). For lower temperatures, dilute the KS-7470 with kerosene (half and half).

NAVY LUBRICANT		STANDARD NAVY STOCK NUMBER				
SPECIFICATION	TITLE	1 PT.	1 QT.	1 GAL.	4 OZS.	1 LB.
Teletype KS-7470	Lubricating oil	N17-T-350011-463	N17-T-350002-698	N17-T-350009-698		
Teletype KS-7471	Lubricating grease				N17-T-350010-757	N17-T-350012-460

Figure 6—3. Monitor Cabinet, Lubrication Points

DRIVEN GEAR - APPLY GREASE SPARINGLY MONTHLY
STOP LEVER PIVOT 1 OR 2 DROPS OIL MONTHLY
SPRING EYES 1 OR 2 DROPS OIL MONTHLY
STOP LEVER WEAR SURFACES APPLY GREASE SPARINGLY MONTHLY

CAUTION: Wipe off excessive lubricant. Do not distort or disturb springs.

NOTE: 1. Use type KS-7470 oil for normal or high temperature -5° to 55° C. (41° to 131° F.). For lower temperatures, dilute the KS-7470 with kerosene (half and half).

NAVY LUBRICANT		STANDARD NAVY STOCK NUMBER				
SPECIFICATION	TITLE	1 PT.	1 QT.	1 GAL.	4 OZS.	1 LB.
Teletype KS-7470	Lubricating oil	N17-T-350011-463	N17-T-350002-698	N17-T-350009-698		
Teletype KS-7471	Lubricating grease				N17-T-350010--757	N17-T-350012-460

Figure 6-5. Symbol

NAVSHIPS 92378
AN/FGC-38, AN/FGC-38X, AN/FGC-39

NOTE: DO NOT LUBRICATE REEL GEAR OR REEL PARTS
MOTOR PINION GEAR APPLY GREASE SPARINGLY MONTHLY
DRIVE GEAR APPLY GREASE SPARINGLY MONTHLY
BEARING 1 OR 2 DROPS OIL MONTHLY
FELT WASHERS - SATURATE WITH OIL WEEKLY
RIM OF STOP CAM 1 OR 2 DROPS OIL - GREASE ON SURFACE MONTHLY
END PIVOT 1 OR 2 DROPS OIL WEEKLY
CLUTCH SHAFT
TAPE LEVER BLOCK PIVOT POINT 1 OR 2 DROPS OIL MONTHLY
STOP LEVER WEAR SURFACES APPLY GREASE SPARINGLY MONTHLY
SPRING EYES 1 OR 2 DROPS OIL MONTHLY
STOP LEVER PIVOT 1 OR 2 DROPS OIL MONTHLY
INTERMEDIATE GEAR APPLY GREASE SPARINGLY MONTHLY
DRIVE SHAFT BEARING - 1 OR 2 DROPS OIL BOTH ENDS WEEKLY
DRIVEN GEAR - APPLY GREASE SPARINGLY MONTHLY

CAUTION: Wipe off excessive lubricant. Do not distort or disturb springs.

NOTE: 1. Use type KS-7470 oil for normal or high temperature (-5° to 55° C. (41° to 131° F.)). For lower temperatures, dilute the KS-7470 with kerosene (half and half).

NAVY LUBRICANT		STANDARD NAVY STOCK NUMBER				
SPECIFICATION	TITLE	1 PT.	1 QT.	1 GAL.	4 OZS.	1 LB.
Teletype KS-7470	Lubricating oil	N17-T-350011-463	N17-T-350002-698	N17-T-350009-698		
Teletype KS-7471	Lubricating grease				N17-T-350010-757	N17-T-350012-460

Figure 6—4. Reeling Machine RL-173/FGC, Lubrication Points

PLACE MOTOR IN UPRIGHT POSITION

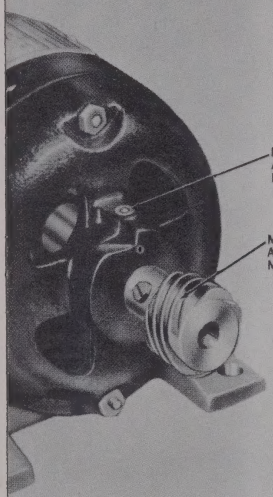

LUBRICANT. DO NOT DISTORT OR DISTURB SPRINGS.
OR NORMAL OR HIGH TEMPERATURE —5° TO 55° C. (41° TO
MPERATURES. DILUTE THE KS-7470 WITH KEROSENE (HALF

	STANDARD NAVY STOCK NUMBER				
	1 PT.	1 QT.	1 GAL.	4 OZS.	1 LB.
	N17-T-350011-463	N17-T-350002-698	N17-T-350009-698		
				N17-T-350010-757	N17-T-350012-460

Figure 6—5. Synchronous Motor, Lubrication Data

NAVSHIPS 92378
AN/FGC-38, AN/FGC-38X, AN/FGC-39

PLACE MOTOR IN UPRIGHT POSITION

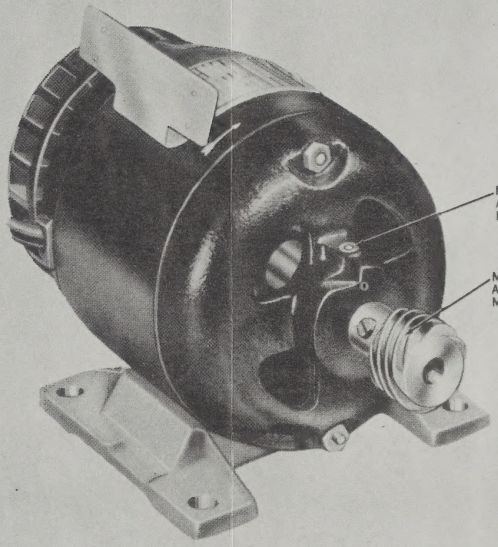

CAUTION: WIPE OFF EXCESSIVE LUBRICANT. DO NOT DISTORT OR DISTURB SPRINGS.
NOTE: 1. USE TYPE KS-7470 OIL FOR NORMAL OR HIGH TEMPERATURE —5° TO 55° C. (41° TO 131° F.) FOR LOWER TEMPERATURES, DILUTE THE KS-7470 WITH KEROSENE (HALF AND HALF).

NAVY LUBRICANT		STANDARD NAVY STOCK NUMBER				
SPECIFICATION	TITLE	1 PT.	1 QT.	1 GAL.	4 OZS.	1 LB.
TELETYPE KS-7470	LUBRICATING OIL	N17-T-350011-463	N17-T-350002-698	N17-T-350009-698		
TELETYPE KS-7471	LUBRICATING GREASE				N17-T-350010-757	N17-T-350012-460

Figure 6—5. Synchronous Motor, Lubrication Data

PLACE MOTOR IN UPRIGHT POSITION

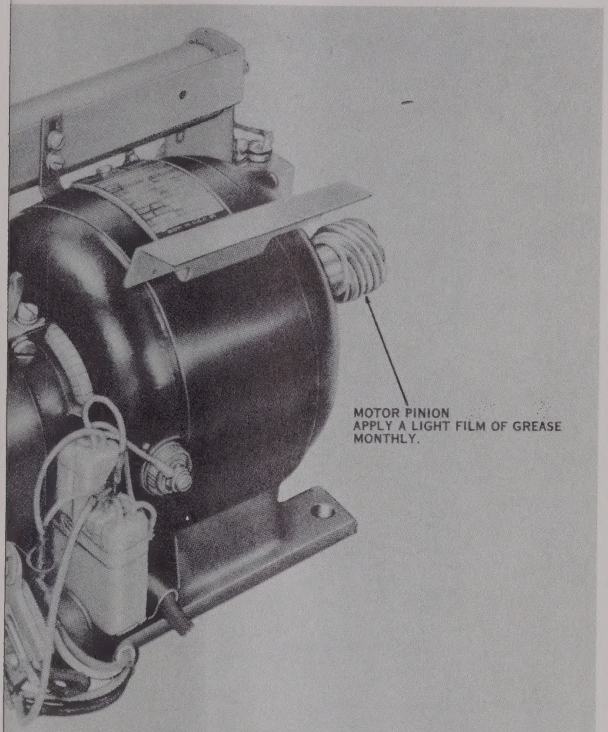

BRICANT. DO NOT DISTORT OR DISTURB SPRINGS.
R NORMAL OR HIGH TEMPERATURE —5° TO 55° C. (41° TO
ERATURES. DILUTE THE KS-7470 WITH KEROSENE (HALF

STANDARD NAVY STOCK NUMBER				
1 PT.	1 QT.	1 GAL.	4 OZS.	1 LB.
N17-T-350011-463	N17-T-350002-698	N17-T-350009-698		
			N17-T-350010-757	N17-T-350012-460

Figure 6—6. Governed Motor, Lubrication Data

NAVSHIPS 92378
AN/FGC-38, AN/FGC-38X, AN/FGC-39

PLACE MOTOR IN UPRIGHT POSITION

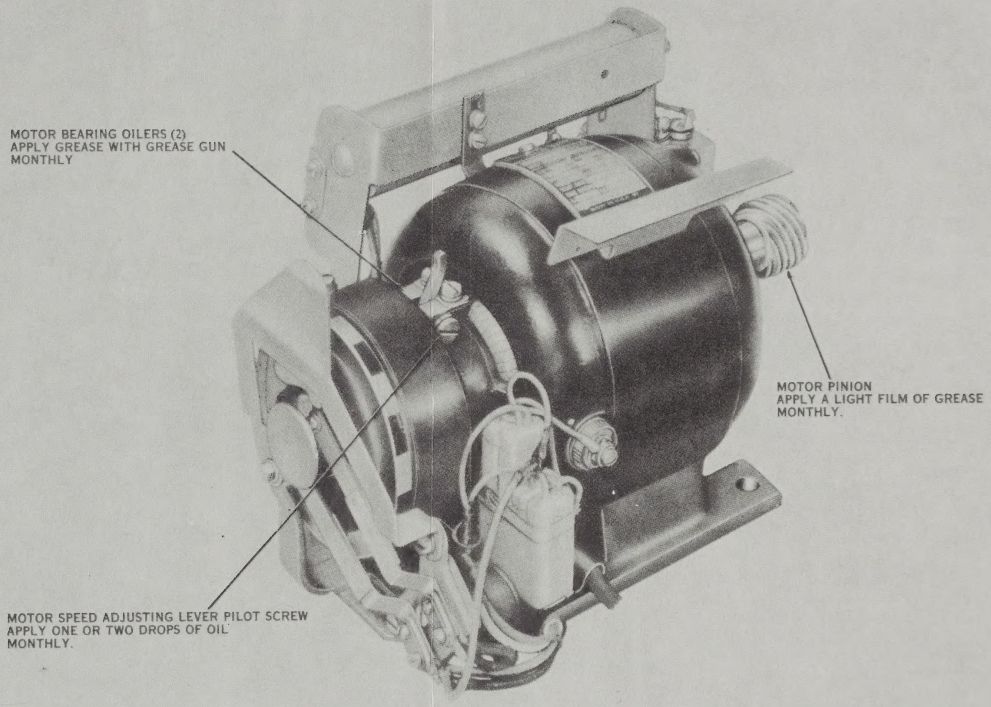

CAUTION: WIPE OFF EXCESSIVE LUBRICANT. DO NOT DISTORT OR DISTURB SPRINGS.
NOTE: 1. USE TYPE KS-7470 OIL FOR NORMAL OR HIGH TEMPERATURE – 5° TO 55° C. (41° TO 131° F.) FOR LOWER TEMPERATURES, DILUTE THE KS-7470 WITH KEROSENE (HALF AND HALF).

NAVY LUBRICANT		STANDARD NAVY STOCK NUMBER				
SPECIFICATION	TITLE	1 PT.	1 QT.	1 GAL.	4 OZS.	1 LB.
TELETYPE KS-7470	LUBRICATING OIL	N17-T-350011-463	N17-T-350002-698	N17-T-350009-698		
TELETYPE KS-7471	LUBRICATING GREASE				N17-T-350010-757	N17-T-350012-460

Figure 6—6. Governed Motor, Lubrication Data

CAUTION: WIPE OFF EXCESSIVE LUBRICANT. DO NOT DISTORT OR DISTURB SPRINGS.
NOTE: 1. USE TYPE KS-7470 OIL FOR NORMAL OR HIGH TEMPERATURE —5° TO 55° C, (41° TO 131° F.) FOR LOWER TEMPERATURES, DILUTE THE KS-7470 WITH KEROSENE (HALF AND HALF).

NAVY LUBRICANT		STANDARD NAVY STOCK NUMBER				
SPECIFICATION	TITLE	1 PT.	1 QT.	1 GAL.	4 OZS.	1 LB.
TELETYPE KS-7470	LUBRICATING OIL	N17-T-350011-463	N17-T-350002-698	N17-T-350009-698		
TELETYPE KS-7471	LUBRICATING GREASE				N17-T-350010-757	N17-T-350012-460

NAVSHIPS 92378
AN/FGC-38, AN/FGC-38X, AN/FGC-39

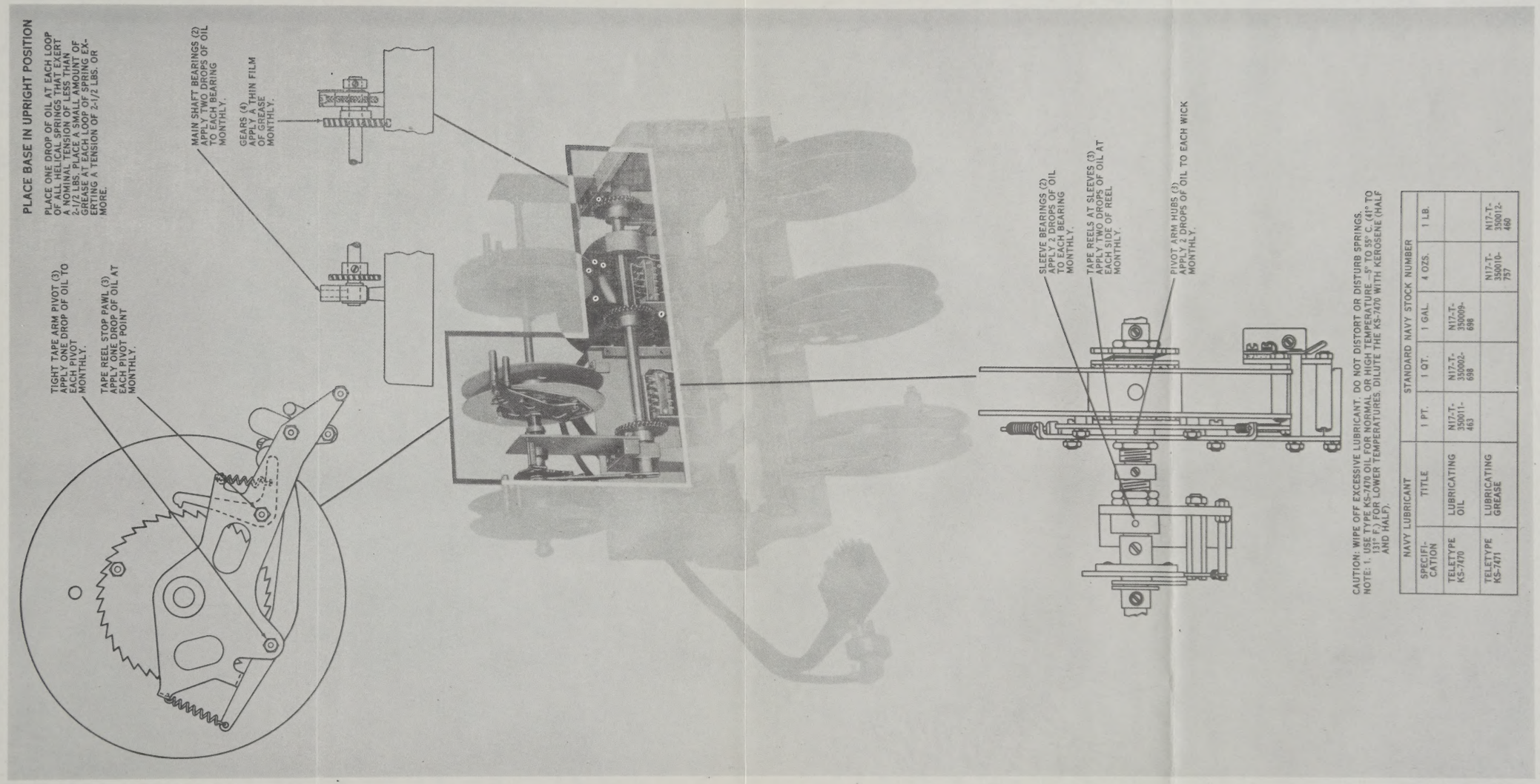
PLACE BASE IN UPRIGHT POSITION
PLACE ONE DROP OF OIL AT EACH LOOP OF ALL HELICAL SPRINGS THAT EXERT A NOMINAL TENSION OF LESS THAN 2-1/2 LBS. PLACE A SMALL AMOUNT OF GREASE AT EACH LOOP OF SPRING EXERTING A TENSION OF 2-1/2 LBS. OR MORE.
TIGHT TAPE ARM PIVOT (3) APPLY ONE DROP OF OIL TO EACH PIVOT MONTHLY.
TAPE REEL STOP PAWL (3) APPLY ONE DROP OF OIL AT EACH PIVOT POINT MONTHLY.
MAIN SHAFT BEARINGS (2) APPLY TWO DROPS OF OIL TO EACH BEARING MONTHLY.
GEARS (4) APPLY A THIN FILM OF GREASE MONTHLY.
SLEEVE BEARINGS (2) APPLY 2 DROPS OF OIL TO EACH BEARING MONTHLY.
TAPE REELS AT SLEEVES (3) APPLY TWO DROPS OF OIL AT EACH SIDE OF REEL MONTHLY.
PIVOT ARM HUBS (3) APPLY 2 DROPS OF OIL TO EACH WICK MONTHLY.

CAUTION: WIPE OFF EXCESSIVE LUBRICANT. DO NOT DISTORT OR DISTURB SPRINGS.
NOTE: 1. USE TYPE KS-7470 OIL FOR NORMAL OR HIGH TEMPERATURE (–5° TO 55° C. (41° TO 131° F.) FOR LOWER TEMPERATURES. DILUTE THE KS-7470 WITH KEROSENE (HALF AND HALF).

NAVY LUBRICANT		STANDARD NAVY STOCK NUMBER				
SPECIFICATION	TITLE	1 PT.	1 QT.	1 GAL.	4 OZS.	1 LB.
TELETYPE KS-7470	LUBRICATING OIL	N17-T-350011-463	N17-T-350002-698	N17-T-350009-698		
TELETYPE KS-7471	LUBRICATING GREASE				N17-T-350010-757	N17-T-350012-460

Figure 6–7. Mounting Base (Numbering), Lubrication Data

CAUTION: WIPE OFF EXCESSIVE LUBRICANT. DO NOT DISTORT OR DISTURB SPRINGS.
NOTE: 1. USE TYPE KS-7470 OIL FOR NORMAL OR HIGH TEMPERATURE —5° TO 55° C. (41° TO 131° F.) FOR LOWER TEMPERATURES, DILUTE THE KS-7470 WITH KEROSENE (HALF AND HALF).

NAVY LUBRICANT		STANDARD NAVY STOCK NUMBER				
SPECIFICATION	TITLE	1 PT.	1 QT.	1 GAL.	4 OZS.	1 LB.
TELETYPE KS-7470	LUBRICATING OIL	N17-T-350011-463	N17-T-350002-698	N17-T-350009-698		
TELETYPE KS-7471	LUBRICATING GREASE				N17-T-350010-757	N17-T-350012-460

NAVSHIPS 92378
AN/FGC-38, AN/FGC-38X, AN/FGC-39

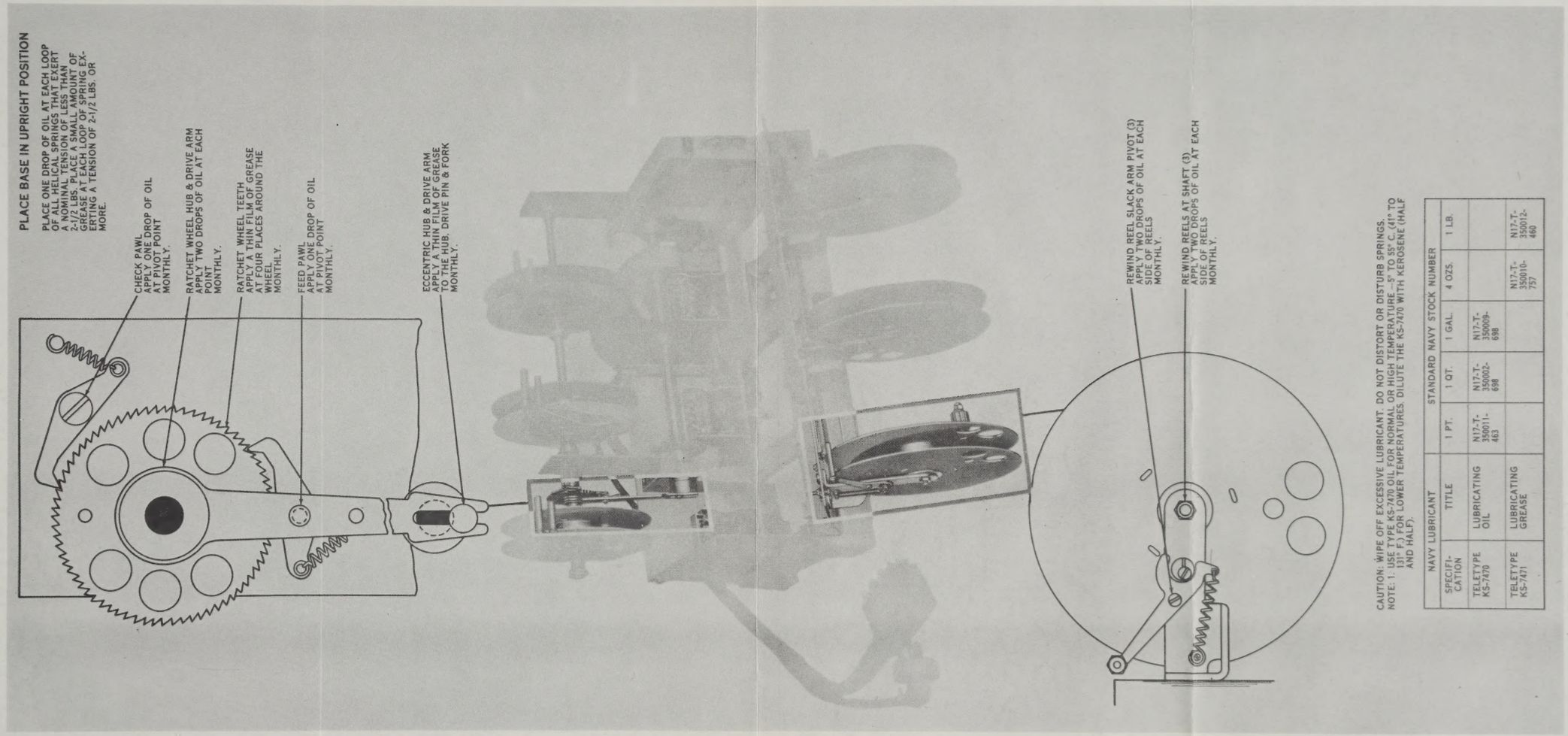
PLACE BASE IN UPRIGHT POSITION
PLACE ONE DROP OF OIL AT EACH LOOP OF ALL HELICAL SPRINGS THAT EXERT A NOMINAL TENSION OF LESS THAN 2-1/2 LBS. PLACE A SMALL AMOUNT OF GREASE AT EACH LOOP OF SPRING EXERTING A TENSION OF 2-1/2 LBS. OR MORE.
CHECK PAWL
APPLY ONE DROP OF OIL AT PIVOT POINT MONTHLY.
RATCHET WHEEL HUB & DRIVE ARM
APPLY TWO DROPS OF OIL AT EACH POINT MONTHLY.
RATCHET WHEEL TEETH
APPLY A THIN FILM OF GREASE AT FOUR PLACES AROUND THE WHEEL MONTHLY.
FEED PAWL
APPLY ONE DROP OF OIL AT PIVOT POINT MONTHLY.
ECCENTRIC HUB & DRIVE ARM
APPLY A THIN FILM OF GREASE TO THE HUB. DRIVE PIN & FORK MONTHLY.
REWIND REEL SLACK ARM PIVOT (3)
APPLY TWO DROPS OF OIL AT EACH SIDE OF REELS MONTHLY.
REWIND REELS AT SHAFT (3)
APPLY TWO DROPS OF OIL AT EACH SIDE OF REELS MONTHLY.

CAUTION: WIPE OFF EXCESSIVE LUBRICANT. DO NOT DISTORT OR DISTURB SPRINGS.
NOTE: 1. USE TYPE KS-7470 OIL FOR NORMAL OR HIGH TEMPERATURE (-5° TO 55° C, (41° TO 131° F.) FOR LOWER TEMPERATURES. DILUTE THE KS-7470 WITH KEROSENE (HALF AND HALF).

NAVY LUBRICANT		STANDARD NAVY STOCK NUMBER				
SPECIFICATION	TITLE	1 PT.	1 QT.	1 GAL.	4 OZS.	1 LB.
TELETYPE KS-7470	LUBRICATING OIL	N17-T-350011-463	N17-T-350002-698	N17-T-350009-698		
TELETYPE KS-7471	LUBRICATING GREASE				N17-T-350010-757	N17-T-350012-460

Figure 6—8. Mounting Base (Numbering), Lubrication Data

CAUTION: WIPE OFF EXCESSIVE LUBRICANT. DO NOT DISTORT OR DISTURB SPRINGS.
NOTE: 1. USE TYPE KS-7470 OIL FOR NORMAL OR HIGH TEMPERATURE —5° TO 55° C, (41° TO 131° F.) FOR LOWER TEMPERATURES. DILUTE THE KS-7470 WITH KEROSENE (HALF AND HALF).

NAVY LUBRICANT		STANDARD NAVY STOCK NUMBER				
SPECIFICATION	TITLE	1 PT.	1 QT.	1 GAL.	4 OZS.	1 LB.
TELETYPE KS-7470	LUBRICATING OIL	N17-T-350011-463	N17-T-350002-698	N17-T-350009-698		
TELETYPE KS-7471	LUBRICATING GREASE				N17-T-350010-757	N17-T-350012-460

NAVSHIPS 92378
AN/FGC-38, AN/FGC-38X, AN/FGC-39

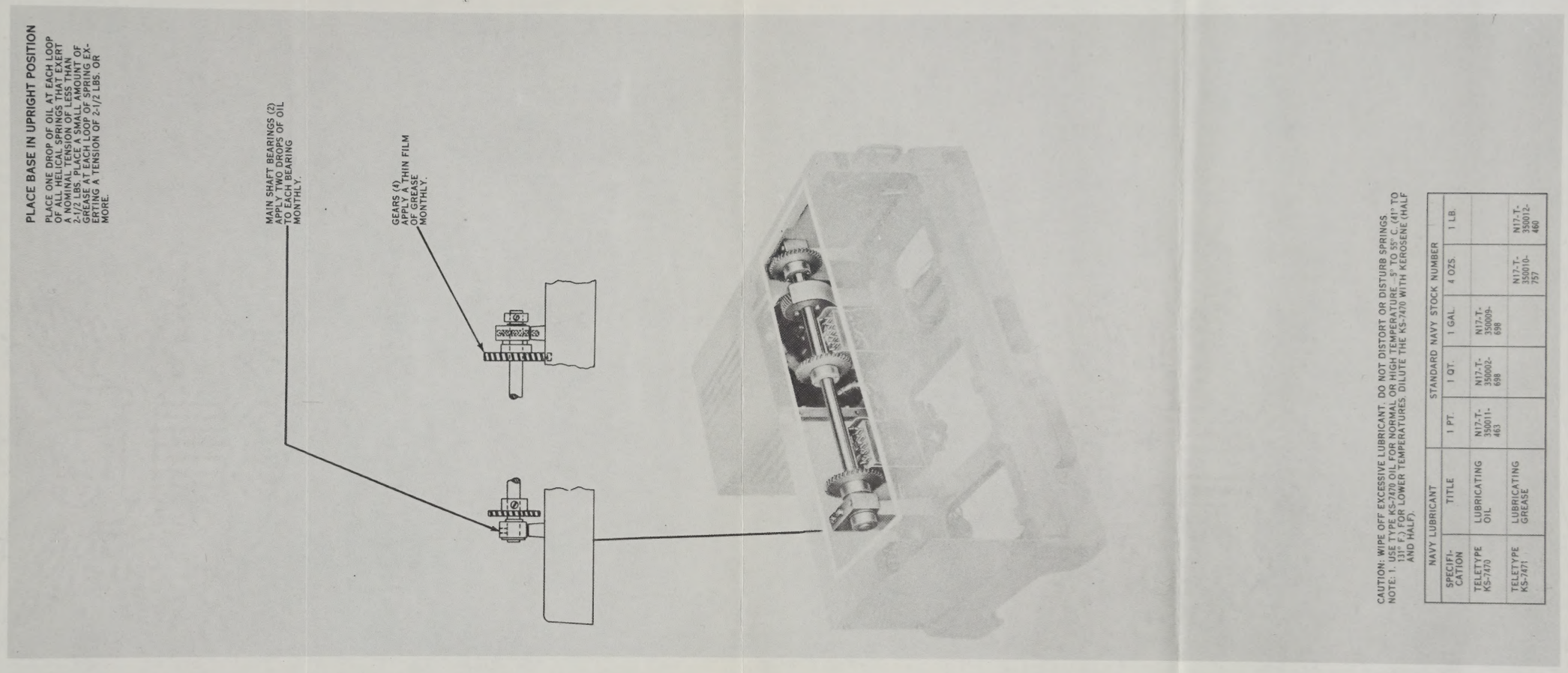
PLACE BASE IN UPRIGHT POSITION
PLACE ONE DROP OF OIL AT EACH LOOP OF ALL HELICAL SPRINGS THAT EXERT A NOMINAL TENSION OF LESS THAN 2-1/2 LBS. PLACE A SMALL AMOUNT OF GREASE AT EACH LOOP OF SPRING EXERTING A TENSION OF 2-1/2 LBS. OR MORE.
MAIN SHAFT BEARINGS (2) APPLY TWO DROPS OF OIL TO EACH BEARING MONTHLY.
GEARS (4) APPLY A THIN FILM OF GREASE MONTHLY.

CAUTION: WIPE OFF EXCESSIVE LUBRICANT. DO NOT DISTORT OR DISTURB SPRINGS.
NOTE: 1. USE TYPE KS-7470 OIL FOR NORMAL OR HIGH TEMPERATURE. 5° TO 55° C. (41° TO 131° F.) FOR LOWER TEMPERATURES. DILUTE THE KS-7470 WITH KEROSENE (HALF AND HALF).

NAVY LUBRICANT		STANDARD NAVY STOCK NUMBER				
SPECIFICATION	TITLE	1 PT.	1 QT.	1 GAL.	4 OZS.	1 LB.
TELETYPE KS-7470	LUBRICATING OIL	N17-T-350011-463	N17-T-350002-698	N17-T-350009-698		
TELETYPE KS-7471	LUBRICATING GREASE				N17-T-350010-757	N17-T-350012-460

Figure 6–9. Mounting Base (Message), Lubrication Data

CAUTION: WIPE OFF EXCESSIVE LUBRICANT. DO NOT DISTORT OR DISTURB SPRINGS.
NOTE: 1. USE TYPE KS-7470 OIL FOR NORMAL OR HIGH TEMPERATURE —5° TO 55° C, (41° TO 131° F.) FOR LOWER TEMPERATURES, DILUTE THE KS-7470 WITH KEROSENE (HALF AND HALF).

NAVY LUBRICANT		STANDARD NAVY STOCK NUMBER				
SPECIFICATION	TITLE	1 PT.	1 QT.	1 GAL.	4 OZS.	1 LB.
TELETYPE KS-7470	LUBRICATING OIL	N17-T-350011-463	N17-T-350002-698	N17-T-350009-698		
TELETYPE KS-7471	LUBRICATING GREASE				N17-T-350010-757	N17-T-350012-460

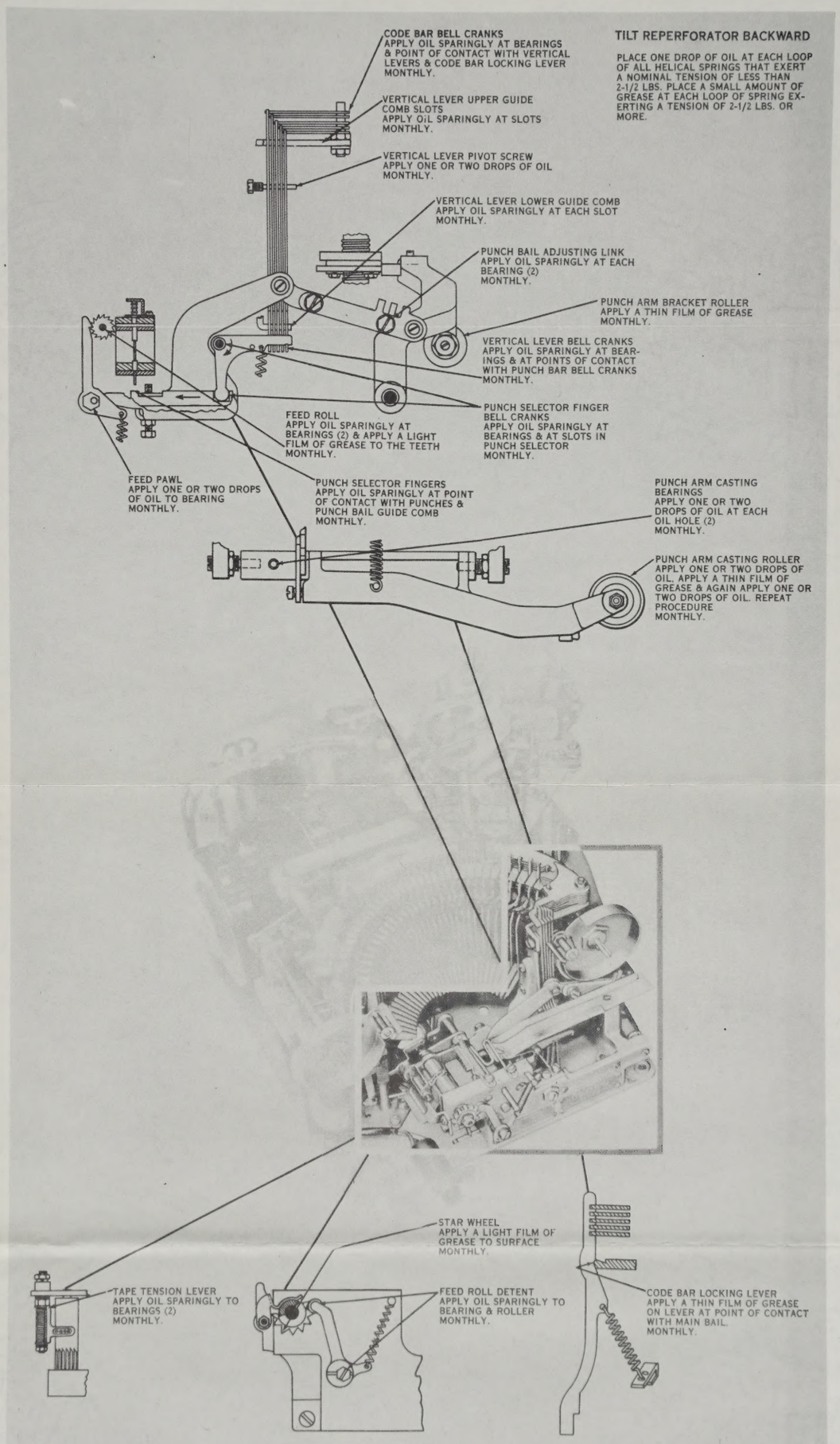
CODE BAR BELL CRANKS
APPLY OIL SPARINGLY AT BEARINGS & POINT OF CONTACT WITH VERTICAL LEVERS & CODE BAR LOCKING LEVER MONTHLY.
VERTICAL LEVER UPPER GUIDE COMB SLOTS
APPLY OIL SPARINGLY AT SLOTS MONTHLY.
VERTICAL LEVER PIVOT SCREW
APPLY ONE OR TWO DROPS OF OIL MONTHLY.
VERTICAL LEVER LOWER GUIDE COMB
APPLY OIL SPARINGLY AT EACH SLOT MONTHLY.
PUNCH BAIL ADJUSTING LINK
APPLY OIL SPARINGLY AT EACH BEARING (2) MONTHLY.
PUNCH ARM BRACKET ROLLER
APPLY A THIN FILM OF GREASE MONTHLY.
VERTICAL LEVER BELL CRANKS
APPLY OIL SPARINGLY AT BEARINGS & AT POINTS OF CONTACT WITH PUNCH BAR BELL CRANKS MONTHLY.
PUNCH SELECTOR FINGER BELL CRANKS
APPLY OIL SPARINGLY AT BEARINGS & AT SLOTS IN PUNCH SELECTOR MONTHLY.
FEED ROLL
APPLY OIL SPARINGLY AT BEARINGS (2) & APPLY A LIGHT FILM OF GREASE TO THE TEETH MONTHLY.
FEED PAWL
APPLY ONE OR TWO DROPS OF OIL TO BEARING MONTHLY.
PUNCH SELECTOR FINGERS
APPLY OIL SPARINGLY AT POINT OF CONTACT WITH PUNCHES & PUNCH BAIL GUIDE COMB MONTHLY.
PUNCH ARM CASTING BEARINGS
APPLY ONE OR TWO DROPS OF OIL AT EACH OIL HOLE (2) MONTHLY.
PUNCH ARM CASTING ROLLER
APPLY ONE OR TWO DROPS OF OIL. APPLY A THIN FILM OF GREASE & AGAIN APPLY ONE OR TWO DROPS OF OIL. REPEAT PROCEDURE MONTHLY.
TILT REPERFORATOR BACKWARD
PLACE ONE DROP OF OIL AT EACH LOOP OF ALL HELICAL SPRINGS THAT EXERT A NOMINAL TENSION OF LESS THAN 2-1/2 LBS. PLACE A SMALL AMOUNT OF GREASE AT EACH LOOP OF SPRING EXERTING A TENSION OF 2-1/2 LBS. OR MORE.
STAR WHEEL
APPLY A LIGHT FILM OF GREASE TO SURFACE MONTHLY.
TAPE TENSION LEVER
APPLY OIL SPARINGLY TO BEARINGS (2) MONTHLY.
FEED ROLL DETENT
APPLY OIL SPARINGLY TO BEARING & ROLLER MONTHLY.
CODE BAR LOCKING LEVER
APPLY A THIN FILM OF GREASE ON LEVER AT POINT OF CONTACT WITH MAIN BAIL. MONTHLY.

CAUTION: WIPE OFF EXCESSIVE LUBRICANT. DO NOT DISTORT OR DISTURB SPRINGS.

NOTE: 1. USE TYPE KS-7470 OIL FOR NORMAL OR HIGH TEMPERATURE —5° TO 55° C. (41° TO 131° F.) FOR LOWER TEMPERATURES, DILUTE THE KS-7470 WITH KEROSENE (HALF AND HALF).

NAVY LUBRICANT		STANDARD NAVY STOCK NUMBER				
SPECIFICATION	TITLE	1 PT.	1 QT.	1 GAL.	4 OZS.	1 LB.
TELETYPE KS-7470	LUBRICATING OIL	N17-T-350011-463	N17-T-350002-698	N17-T-350009-698		
TELETYPE KS-7471	LUBRICATING GREASE				N17-T-350010-757	N17-T-350012-460

Figure 6—10. Reperforator, Lubrication Data

MONTHLY.
MAIN SHAFT
APPLY ONE OR TWO DROPS OF OIL AT OIL HOLE MONTHLY.
CAMS
APPLY A THIN FILM OF GREASE TO THE DETENT CAM & FEED CAM MONTHLY.
TRIP LEVER BEARINGS
APPLY ONE OR TWO DROPS OF OIL AT BEARING (2) MONTHLY.

CAUTION: WIPE OFF EXCESSIVE LUBRICANT. DO NOT DISTORT OR DISTURB SPRINGS.
NOTE: 1. USE TYPE KS-7470 OIL FOR NORMAL OR HIGH TEMPERATURE —5° TO 55° C. (41° TO 131° F.). FOR LOWER TEMPERATURES, DILUTE THE KS-7470 WITH KEROSENE (HALF AND HALF).

NAVY LUBRICANT		STANDARD NAVY STOCK NUMBER				
SPECIFICATION	TITLE	1 PT.	1 QT.	1 GAL.	4 OZS.	1 LB.
TELETYPE KS-7470	LUBRICATING OIL	N17-T-350011-463	N17-T-350002-698	N17-T-350009-698		
TELETYPE KS-7471	LUBRICATING GREASE				N17-T-350010-757	N17-T-350012-460

NAVSHIPS 92378
AN/FGC-38, AN/FGC-38X, AN/FGC-39

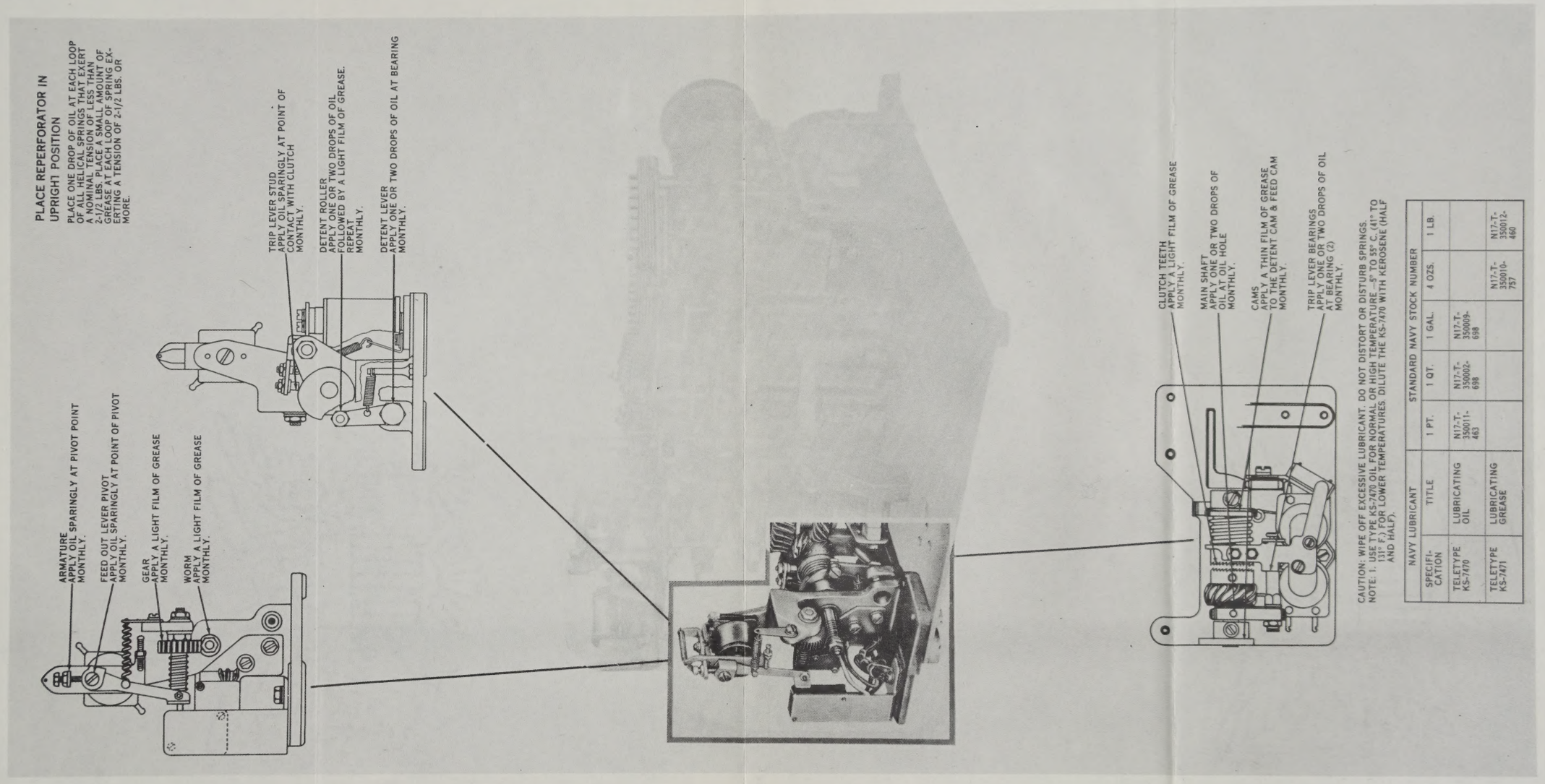
PLACE REPERFORATOR IN UPRIGHT POSITION
PLACE ONE DROP OF OIL AT EACH LOOP OF ALL HELICAL SPRINGS THAT EXERT A NOMINAL TENSION OF LESS THAN 2-1/2 LBS. PLACE A SMALL AMOUNT OF GREASE AT EACH LOOP OF SPRING EXERTING A TENSION OF 2-1/2 LBS. OR MORE.
ARMATURE
APPLY OIL SPARINGLY AT PIVOT POINT MONTHLY.
FEED OUT LEVER PIVOT
APPLY OIL SPARINGLY AT POINT OF PIVOT MONTHLY.
GEAR
APPLY A LIGHT FILM OF GREASE MONTHLY.
WORM
APPLY A LIGHT FILM OF GREASE MONTHLY.
TRIP LEVER STUD
APPLY OIL SPARINGLY AT POINT OF CONTACT WITH CLUTCH MONTHLY.
DETENT ROLLER
APPLY ONE OR TWO DROPS OF OIL FOLLOWED BY A LIGHT FILM OF GREASE. REPEAT MONTHLY.
DETENT LEVER
APPLY ONE OR TWO DROPS OF OIL AT BEARING MONTHLY.
CLUTCH TEETH
APPLY A LIGHT FILM OF GREASE MONTHLY.
MAIN SHAFT
APPLY ONE OR TWO DROPS OF OIL AT OIL HOLE MONTHLY.
CAMS
APPLY A THIN FILM OF GREASE TO THE DETENT CAM & FEED CAM MONTHLY.
TRIP LEVER BEARINGS
APPLY ONE OR TWO DROPS OF OIL AT BEARING (2) MONTHLY.

CAUTION: WIPE OFF EXCESSIVE LUBRICANT. DO NOT DISTORT OR DISTURB SPRINGS.
NOTE: 1. USE TYPE KS-7470 OIL FOR NORMAL OR HIGH TEMPERATURE —5° TO 55° C. (41° TO 131° F.) FOR LOWER TEMPERATURES DILUTE THE KS-7470 WITH KEROSENE (HALF AND HALF).

NAVY LUBRICANT		STANDARD NAVY STOCK NUMBER				
SPECIFICATION	TITLE	1 PT.	1 QT.	1 GAL.	4 OZS.	1 LB.
TELETYPE KS-7470	LUBRICATING OIL	N17-T-350011-463	N17-T-350002-698	N17-T-350009-698		
TELETYPE KS-7471	LUBRICATING GREASE				N17-T-350010-757	N17-T-350012-460

Figure 6—11. Reperforator, Lubrication Data

CAUTION: WIPE OFF EXCESSIVE LUBRICANT. DO NOT DISTORT OR DISTURB SPRINGS.
NOTE: 1. USE TYPE KS-7470 OIL FOR NORMAL OR HIGH TEMPERATURE —5° TO 55° C. (41° TO 131° F.) FOR LOWER TEMPERATURES. DILUTE THE KS-7470 WITH KEROSENE (HALF AND HALF).

NAVY LUBRICANT		STANDARD NAVY STOCK NUMBER				
SPECIFICATION	TITLE	1 PT.	1 QT.	1 GAL.	4 OZS.	1 LB.
TELETYPE KS-7470	LUBRICATING OIL	N17-T-350011-463	N17-T-350002-698	N17-T-350099-698		
TELETYPE KS-7471	LUBRICATING GREASE				N17-T-350010-757	N17-T-350012-460

NAVSHIPS 92378
AN/FGC-38, AN/FGC-38X, AN/FGC-39

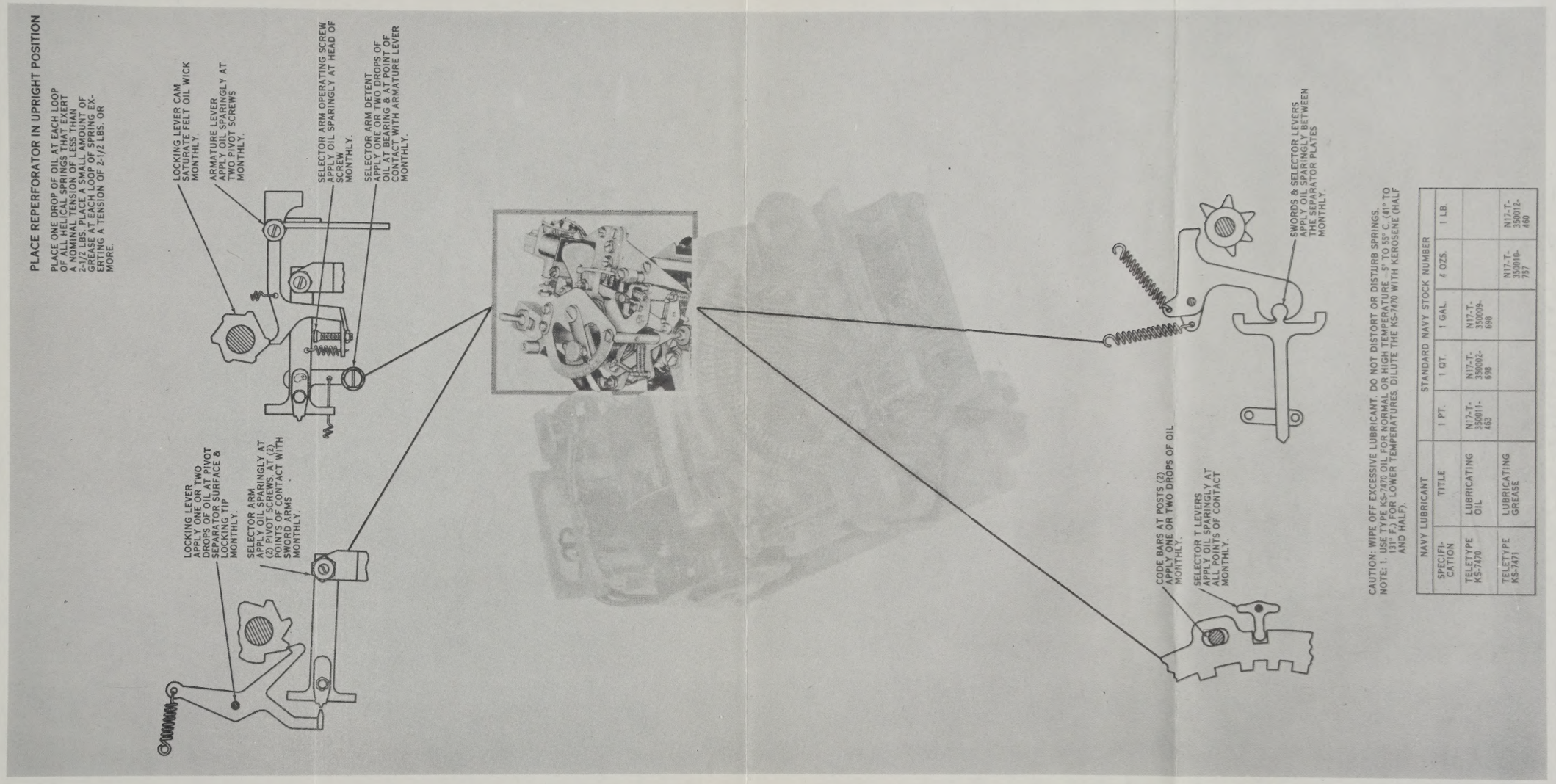
PLACE REPERFORATOR IN UPRIGHT POSITION
PLACE ONE DROP OF OIL AT EACH LOOP OF A HELICAL SPRING THAT EXERT A NORMAL TENSION OF LESS THAN 2-1/2 LBS. PLACE A SMALL AMOUNT OF GREASE AT EACH LOOP OF SPRING EXERTING A TENSION OF 2-1/2 LBS. OR MORE.
LOCKING LEVER CAM SATURATE FELT OIL WICK MONTHLY.
ARMATURE LEVER APPLY OIL SPARINGLY AT TWO PIVOT SCREWS MONTHLY.
SELECTOR ARM OPERATING SCREW APPLY OIL SPARINGLY AT HEAD OF SCREW MONTHLY.
SELECTOR ARM DETENT APPLY ONE OR TWO DROPS OF OIL AT BEARING & AT POINT OF CONTACT WITH ARMATURE LEVER MONTHLY.
LOCKING LEVER APPLY ONE OR TWO DROPS OF OIL AT PIVOT SEPARATOR SURFACE & LOCKING TIP MONTHLY.
SELECTOR ARM APPLY OIL SPARINGLY AT (2) PIVOT SCREWS, AT (2) POINTS OF CONTACT WITH SWORD ARMS MONTHLY.
SWORDS & SELECTOR LEVERS APPLY OIL SPARINGLY BETWEEN THE SEPARATOR PLATES MONTHLY.
CODE BARS AT POSTS (2) APPLY ONE OR TWO DROPS OF OIL MONTHLY.
SELECTOR T LEVERS APPLY OIL SPARINGLY AT ALL POINTS OF CONTACT MONTHLY.

CAUTION: WIPE OFF EXCESSIVE LUBRICANT. DO NOT DISTORT OR DISTURB SPRINGS.
NOTE: 1. USE TYPE KS-7470 OIL FOR NORMAL OR HIGH TEMPERATURE -5° TO 55° C. (41° TO 131° F.) FOR LOWER TEMPERATURES DILUTE THE KS-7470 WITH KEROSENE (HALF AND HALF).

NAVY LUBRICANT		STANDARD NAVY STOCK NUMBER				
SPECIFICATION	TITLE	1 PT.	1 QT.	1 GAL.	4 OZS.	1 LB.
TELETYPE KS-7470	LUBRICATING OIL	N17-T-350011-463	N17-T-350002-698	N17-T-350009-698		
TELETYPE KS-7471	LUBRICATING GREASE				N17-T-350010-757	N17-T-350012-460

Figure 6—12. Reperforator, Lubrication Data

MAIN BAIL OPERATING ARM ROLLER
APPLY A FEW DROPS OF OIL. COAT WITH A THIN FILM OF GREASE. APPLY A FEW DROPS OF OIL. REPEAT PROCEDURE MONTHLY.
MAIN BAIL LEVER
FILL OIL CUP & OIL END OF LEVER IN MAIN BAIL PLUNGER MONTHLY.
MAIN BAIL LEVER SPRING POST
SATURATE OIL WICK MONTHLY.

CAUTION: WIPE OFF EXCESSIVE LUBRICANT. DO NOT DISTORT OR DISTURB SPRINGS.
NOTE: 1. USE TYPE KS-7470 OIL FOR NORMAL OR HIGH TEMPERATURE -5° TO 55° C. (41° TO 131° F.) FOR LOWER TEMPERATURES, DILUTE THE KS-7470 WITH KEROSENE (HALF AND HALF).

NAVY LUBRICANT		STANDARD NAVY STOCK NUMBER					
SPECIFICATION	TITLE	1 PT.	1 QT.	1 GAL.	4 OZS.	1 LB.
TELETYPE KS-7470	LUBRICATING OIL	N17-T-350011-463	N17-T-350002-698	N17-T-350093-698		
TELETYPE KS-7471	LUBRICATING GREASE				N17-T-350010-757	N17-T-350012-460

NAVSHIPS 92378
AN/FGC-38, AN/FGC-38X, AN/FGC-39

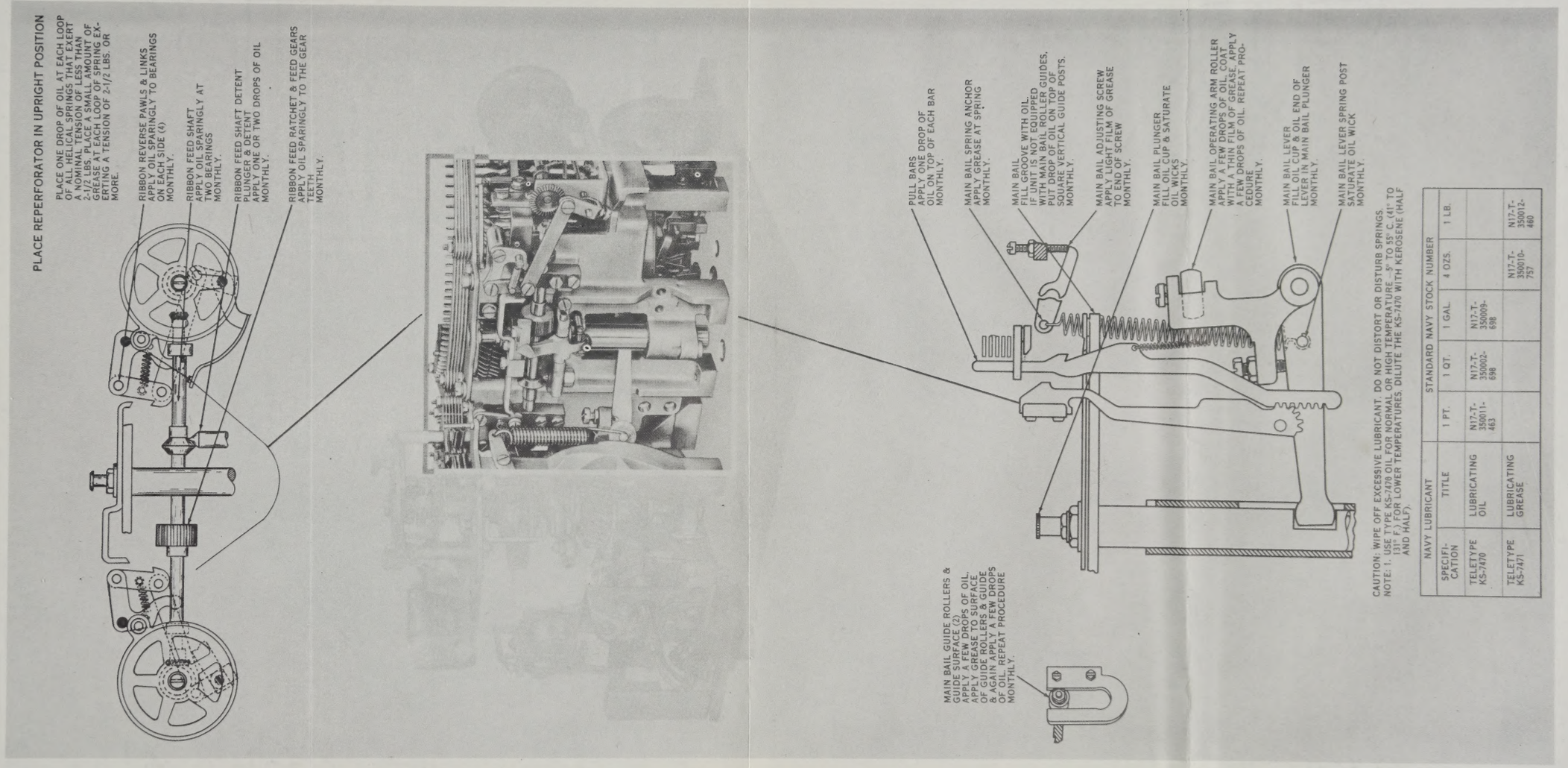
PLACE REPERFORATOR IN UPRIGHT POSITION
PLACE ONE DROP OF OIL AT EACH LOOP OF ALL HELICAL SPRINGS THAT EXERT A NOMINAL TENSION OF LESS THAN 2-1/2 LBS. PLACE A SMALL AMOUNT OF GREASE AT EACH LOOP OF SPRING EXERTING A TENSION OF 2-1/2 LBS. OR MORE.
RIBBON REVERSE PAWLS & LINKS APPLY OIL SPARINGLY TO BEARINGS ON EACH SIDE (4) MONTHLY.
RIBBON FEED SHAFT APPLY OIL SPARINGLY AT TWO BEARINGS MONTHLY.
RIBBON FEED SHAFT DETENT PLUNGER & DETENT APPLY ONE OR TWO DROPS OF OIL MONTHLY.
RIBBON FEED RATCHET & FEED GEARS APPLY OIL SPARINGLY TO THE GEAR TEETH MONTHLY.
PULL BARS APPLY ONE DROP OF OIL ON TOP OF EACH BAR MONTHLY.
MAIN BAIL SPRING ANCHOR APPLY GREASE AT SPRING MONTHLY.
MAIN BAIL FILL GROOVE WITH OIL. IF UNIT IS NOT EQUIPPED WITH MAIN BAIL ROLLER GUIDES, PUT DROP OF OIL ON TOP OF SQUARE VERTICAL GUIDE POSTS. MONTHLY.
MAIN BAIL ADJUSTING SCREW APPLY LIGHT FILM OF GREASE TO END OF SCREW MONTHLY.
MAIN BAIL PLUNGER FILL OIL CUP & SATURATE OIL WICKS MONTHLY.
MAIN BAIL OPERATING ARM ROLLER APPLY A FEW DROPS OF OIL, COAT WITH A THIN FILM OF GREASE. APPLY A FEW DROPS OF OIL. REPEAT PROCEDURE MONTHLY.
MAIN BAIL LEVER FILL OIL CUP & OIL END OF LEVER IN MAIN BAIL PLUNGER MONTHLY.
MAIN BAIL LEVER SPRING POST SATURATE OIL WICK MONTHLY.
MAIN BAIL GUIDE ROLLERS & GUIDE SURFACE (2) APPLY A FEW DROPS OF OIL. APPLY GREASE TO SURFACE OF GUIDE ROLLERS & GUIDE & AGAIN APPLY A FEW DROPS OF OIL. REPEAT PROCEDURE MONTHLY.

CAUTION: WIPE OFF EXCESSIVE LUBRICANT. DO NOT DISTORT OR DISTURB SPRINGS.
NOTE: 1. USE TYPE KS-7470 OIL FOR NORMAL OR HIGH TEMPERATURE –5° TO 55° C. (41° TO 131° F.) FOR LOWER TEMPERATURES, DILUTE THE KS-7470 WITH KEROSENE (HALF AND HALF).

NAVY LUBRICANT		STANDARD NAVY STOCK NUMBER				
SPECIFICATION	TITLE	1 PT.	1 QT.	1 GAL.	4 OZS.	1 LB.
TELETYPE KS-7470	LUBRICATING OIL	N17-T-350011-463	N17-T-350002-698	N17-T-350009-698		
TELETYPE KS-7471	LUBRICATING GREASE				N17-T-350010-757	N17-T-350012-460

Figure 6–13. Reperforator, Lubrication Data

SHIFT LEVER
APPLY OIL SPARINGLY TO EACH BEARING (2). APPLY OIL SPARINGLY AT POINT OF CONTACT WITH SHIFT BELL CRANK MONTHLY.
PLATEN GUIDE SHAFT BEARING
APPLY ONE OR TWO DROPS OF OIL MONTHLY.
FIGURES PULL BAR EXTENSION
APPLY OIL SPARINGLY AT POINT OF CONTACT WITH SHIFT LEVER MONTHLY.

CAUTION: WIPE OFF EXCESSIVE LUBRICANT. DO NOT DISTORT OR DISTURB SPRINGS.
NOTE: 1. USE TYPE KS-7470 OIL FOR NORMAL OR HIGH TEMPERATURE (-5° TO 55° C. (41° TO 131° F.) FOR LOWER TEMPERATURES. DILUTE THE KS-7470 WITH KEROSENE (HALF AND HALF).

NAVY LUBRICANT		STANDARD NAVY STOCK NUMBER					
SPECIFICATION	TITLE	1 PT.	1 QT.	1 GAL.	4 OZS.	1 LB.
TELETYPE KS-7470	LUBRICATING OIL	N17-T-350011-463	N17-T-350002-698	N17-T-350009-698		
TELETYPE KS-7471	LUBRICATING GREASE				N17-T-350010-757	N17-T-350012-460

NAVSHIPS 92378
AN/FGC-38, AN/FGC-38X, AN/FGC-39

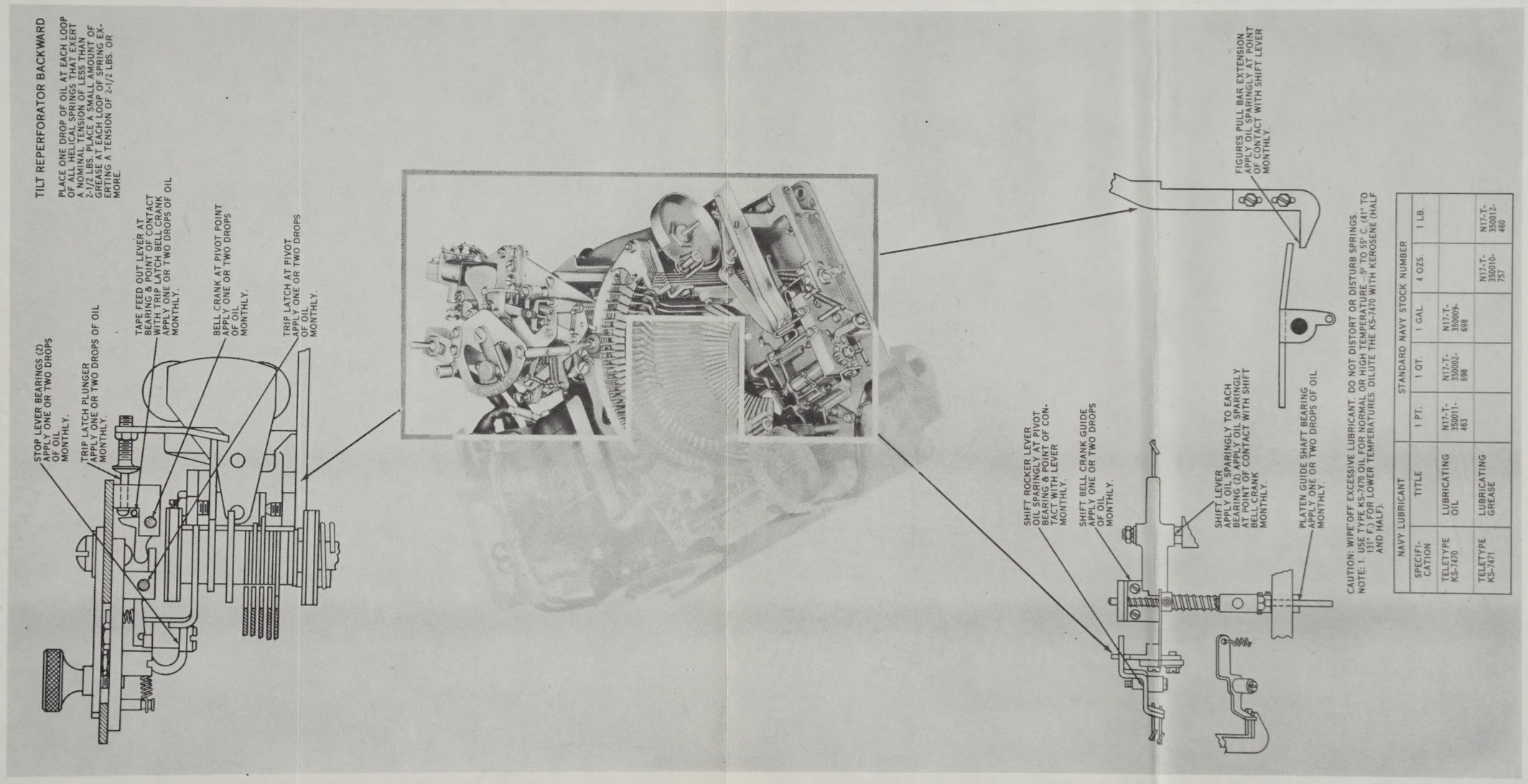
TILT REPERFORATOR BACKWARD
PLACE ONE DROP OF OIL AT EACH LOOP OF ALL HELICAL SPRINGS THAT EXERT A NOMINAL TENSION OF LESS THAN 2 1/2 LBS. PLACE A SMALL AMOUNT OF GREASE AT EACH LOOP OF SPRING EXERTING A TENSION OF 2-1/2 LBS. OR MORE.
STOP LEVER BEARINGS (2) APPLY ONE OR TWO DROPS OF OIL MONTHLY.
TRIP LATCH PLUNGER APPLY ONE OR TWO DROPS OF OIL MONTHLY.
TAPE FEED OUT LEVER AT BEARING & POINT OF CONTACT WITH TRIP LATCH BELL CRANK APPLY ONE OR TWO DROPS OF OIL MONTHLY.
BELL CRANK AT PIVOT POINT APPLY ONE OR TWO DROPS OF OIL MONTHLY.
TRIP LATCH AT PIVOT APPLY ONE OR TWO DROPS OF OIL MONTHLY.
FIGURE'S PULL BAR EXTENSION APPLY OIL SPARINGLY AT POINT OF CONTACT WITH SHIFT LEVER MONTHLY.
SHIFT ROCKER LEVER OIL SPARINGLY AT PIVOT BEARING & POINT OF CONTACT WITH LEVER MONTHLY.
SHIFT BELL CRANK GUIDE APPLY ONE OR TWO DROPS OF OIL MONTHLY.
SHIFT LEVER APPLY OIL SPARINGLY TO EACH BEARING (2) APPLY OIL SPARINGLY AT POINT OF CONTACT WITH SHIFT BELL CRANK MONTHLY.
PLATEN GUIDE SHAFT BEARING APPLY ONE OR TWO DROPS OF OIL MONTHLY.

CAUTION: WIPE OFF EXCESSIVE LUBRICANT. DO NOT DISTORT OR DISTURB SPRINGS.
NOTE: 1. USE TYPE KS-7470 OIL FOR NORMAL OR HIGH TEMPERATURE (5° TO 55° C. (41° TO 131° F.) FOR LOWER TEMPERATURES DILUTE THE KS-7470 WITH KEROSENE (HALF AND HALF).

NAVY LUBRICANT		STANDARD NAVY STOCK NUMBER				
SPECIFICATION	TITLE	1 PT.	1 QT.	1 GAL.	4 OZS.	1 LB.
TELETYPE KS-7470	LUBRICATING OIL	N17-T-350011-463	N17-T-350002-698	N17-T-350009-698		
TELETYPE KS-7471	LUBRICATING GREASE				N17-T-350010-757	N17-T-350012-460

Figure 6—14. Reperforator, Lubrication Data

APPLY GREASE SPARINGLY MONTHLY.
PUNCH ARM CAM APPLY GREASE SPARINGLY MONTHLY.
CLUTCH BUSHING FELT WICKS OIL THROUGH (2) HOLES ON BUSHING BELOW PUNCH CAM MONTHLY.
MAIN BAIL CAM FRICTION DISK & FELT WASHER SATURATE WITH OIL MONTHLY.
MAIN SHAFT GEARS (2) APPLY A THIN COAT OF GREASF MONTHLY.

CAUTION: WIPE OFF EXCESSIVE LUBRICANT. DO NOT DISTORT OR DISTURB SPRINGS.
NOTE: 1. USE TYPE KS-7470 OIL FOR NORMAL OR HIGH TEMPERATURE –5° TO 55° C. (41° TO 131° F.) FOR LOWER TEMPERATURES. DILUTE THE KS-7470 WITH KEROSENE (HALF AND HALF).

NAVY LUBRICANT		STANDARD NAVY STOCK NUMBER				
SPECIFICATION	TITLE	1 PT.	1 QT.	1 GAL.	4 OZS.	1 LB.
TELETYPE KS-7470	LUBRICATING OIL	N17-T-350011-463	N17-T-350002-698	1 -/-T-350009-698		
TELETYPE KS-7471	LUBRICATING GREASE				N17-T-350010-757	N17-T-350012-460

NAVSHIPS 92378
AN/FGC-38, AN/FGC-38X, AN/FGC-39

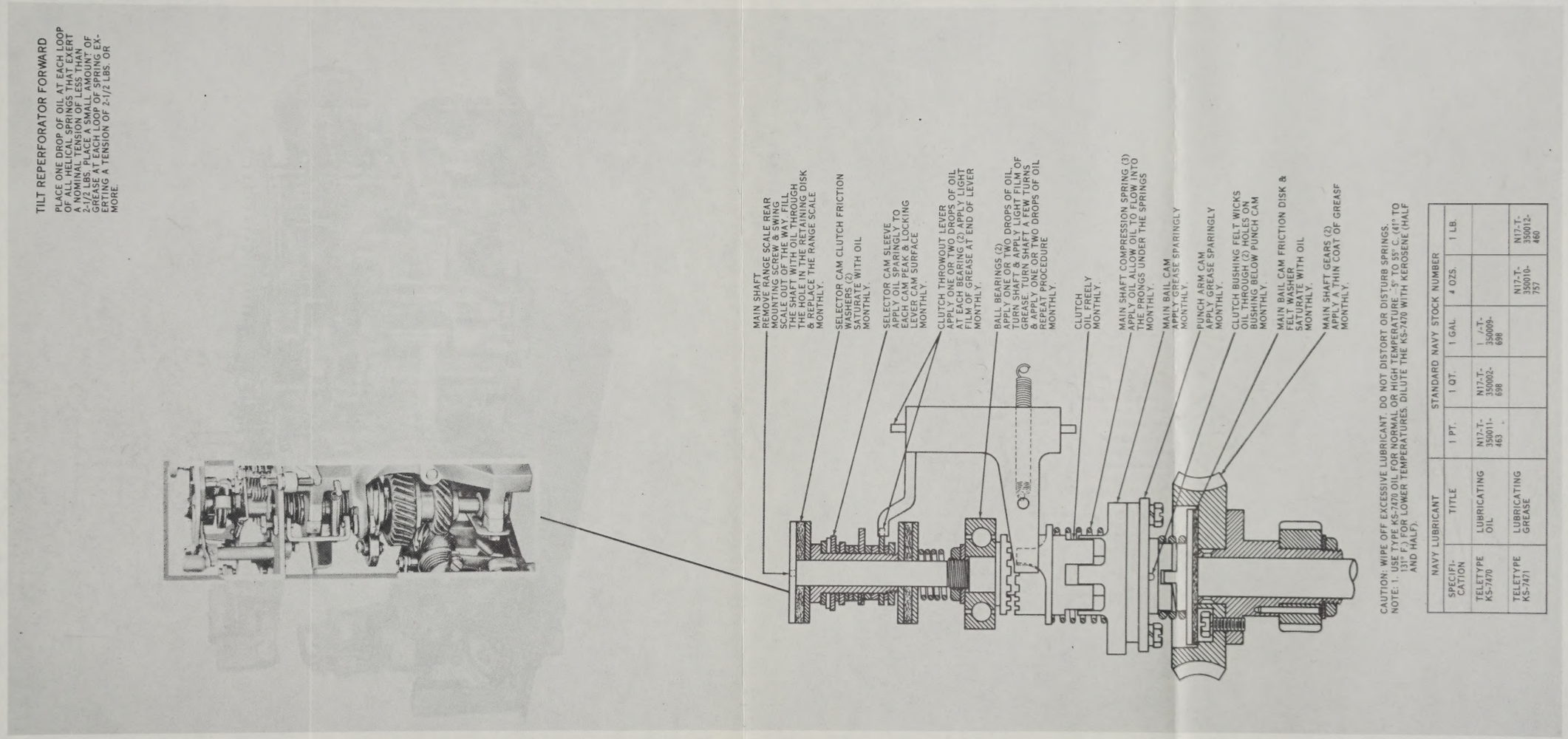
TILT REPERFORATOR FORWARD
PLACE ONE DROP OF OIL AT EACH LOOP OF ALL HELICAL SPRINGS THAT EXERT A NOMINAL TENSION OF LESS THAN 2-1/2 LBS. PLACE A SMALL AMOUNT OF GREASE AT EACH LOOP OF SPRING EXERTING A TENSION OF 2-1/2 LBS. OR MORE.
MAIN SHAFT
REMOVE RANGE SCALE REAR MOUNTING SCREW & SWING SCALE OUT OF THE WAY. FILL THE SHAFT WITH OIL THROUGH THE HOLE IN THE RETAINING DISK & REPLACE THE RANGE SCALE MONTHLY.
SELECTOR CAM CLUTCH FRICTION WASHER (2) SATURATE WITH OIL MONTHLY.
SELECTOR CAM SLEEVE APPLY OIL SPARINGLY TO EACH CAM PEAK & LOCKING LEVER CAM SURFACE MONTHLY.
CLUTCH THROWOUT LEVER APPLY ONE OR TWO DROPS OF OIL AT EACH BEARING (2) APPLY LIGHT FILM OF GREASE AT END OF LEVER MONTHLY.
BALL BEARINGS (2) APPLY ONE OR TWO DROPS OF OIL. TURN SHAFT & APPLY LIGHT FILM OF GREASE. TURN SHAFT A FEW TURNS & APPLY ONE OR TWO DROPS OF OIL REPEAT PROCEDURE MONTHLY.
CLUTCH OIL FREELY MONTHLY.
MAIN SHAFT COMPRESSION SPRING (3) APPLY OIL ALLOW OIL TO FLOW INTO THE PRONGS UNDER THE SPRINGS MONTHLY.
MAIN BAIL CAM APPLY GREASE SPARINGLY MONTHLY.
PUNCH ARM CAM APPLY GREASE SPARINGLY MONTHLY.
CLUTCH BUSHING FELT WICKS OIL THROUGH (2) HOLES ON BUSHING BELOW PUNCH CAM MONTHLY.
MAIN BAIL CAM FRICTION DISK & FELT WASHER SATURATE WITH OIL MONTHLY.
MAIN SHAFT GEARS (2) APPLY A THIN COAT OF GREASF MONTHLY.

CAUTION: WIPE OFF EXCESSIVE LUBRICANT. DO NOT DISTORT OR DISTURB SPRINGS.
NOTE: 1. USE TYPE KS-7470 OIL FOR NORMAL OR HIGH TEMPERATURE -5° TO 55° C. (41° TO 131° F.). FOR LOWER TEMPERATURES DILUTE THE KS-7470 WITH KEROSENE (HALF AND HALF).

NAVY LUBRICANT		STANDARD NAVY STOCK NUMBER				
SPECIFICATION	TITLE	1 PT.	1 QT.	1 GAL.	4 OZS.	1 LB.
TELETYPE KS-7470	LUBRICATING OIL	N17-T-350011-465	N17-T-350002-698	1 -/-T-350009-698		
TELETYPE KS-7471	LUBRICATING GREASE				N17-T-350010-757	N17-T-350012-460

Figure 6—15. Reperforator, Lubrication Data

PLATEN BLOCK SHAFT BEARING
APPLY ONE OR TWO DROPS OF OIL
MONTHLY.
SHIFT ROCKER & SHIFT ROCKER ARM
OIL SPARINGLY AT EACH PIVOT
BEARING (2)
MONTHLY.
PULL BAR LOCKS OUT LEVER
APPLY ONE OR TWO DROPS OF
OIL AT PIVOT & AT EACH ROLLER (2)
MONTHLY.

CAUTION: WIPE OFF EXCESSIVE LUBRICANT. DO NOT DISTORT OR DISTURB SPRINGS.
NOTE: 1. USE TYPE KS-7470 OIL FOR NORMAL OR HIGH TEMPERATURE (+5° TO 55° C. (41° TO 131° F.)) OR LOWER TEMPERATURES. DILUTE THE KS-7470 WITH KEROSENE (HALF AND HALF).

NAVY LUBRICANT		STANDARD NAVY STOCK NUMBER				
SPECIFICATION	TITLE	1 PT.	1 QT.	1 GAL.	4 OZS.	1 LB.
TELETYPE KS-7470	LUBRICATING OIL	N17-T-350011-463	N17-T-350002-698	N17-T-350009-698		
TELETYPE KS-7471	LUBRICATING GREASE				N17-T-350010-757	N17-T-350012-460

NAVSHIPS 92378
AN/FGC-38, AN/FGC-38X, AN/FGC-39

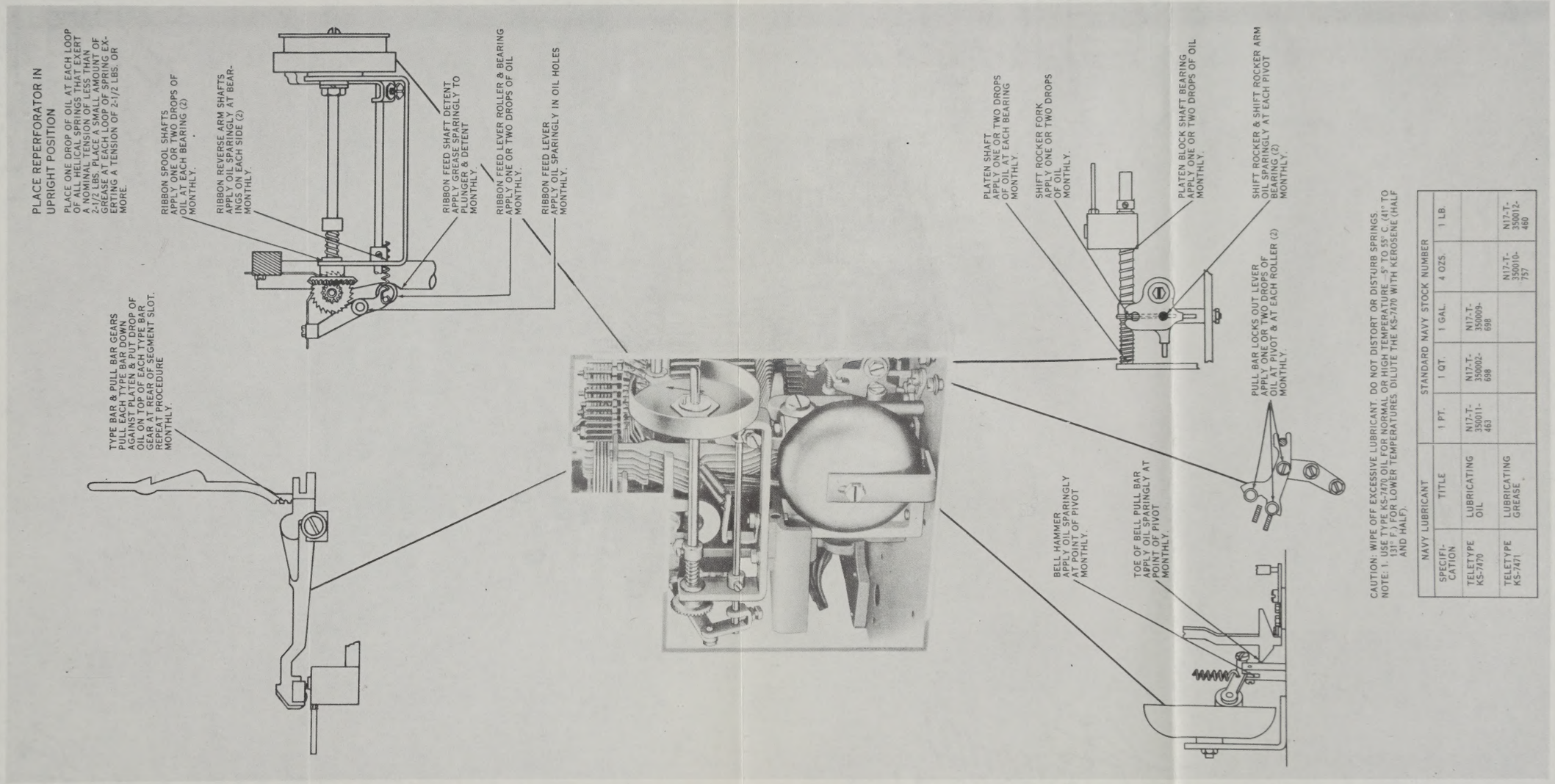
PLACE REPERFORATOR IN UPRIGHT POSITION
PLACE ONE DROP OF OIL AT EACH LOOP OF ALL HELICAL SPRINGS THAT EXERT A NOMINAL TENSION OF LESS THAN 2-1/2 LBS. PLACE A SMALL AMOUNT OF GREASE AT EACH LOOP OF SPRING EXERTING A TENSION OF 2-1/2 LBS. OR MORE.
RIBBON SPOOL SHAFTS APPLY ONE OR TWO DROPS OF OIL AT EACH BEARING (2) MONTHLY.
RIBBON REVERSE ARM SHAFTS APPLY OIL SPARINGLY AT BEARINGS ON EACH SIDE (2) MONTHLY.
RIBBON FEED SHAFT DETENT APPLY GREASE SPARINGLY TO PLUNGER & DETENT MONTHLY.
RIBBON FEED LEVER ROLLER & BEARING APPLY ONE OR TWO DROPS OF OIL MONTHLY.
RIBBON FEED LEVER APPLY OIL SPARINGLY IN OIL HOLES MONTHLY.
TYPE BAR & PULL BAR GEARS PULL EACH TYPE BAR DOWN AGAINST PLATEN & PUT DROP OF OIL ON TOP OF EACH TYPE BAR GEAR TEETH AT REAR SEGMENT SLOT. REPEAT PROCEDURE MONTHLY.
PLATEN SHAFT APPLY ONE OR TWO DROPS OF OIL AT EACH BEARING MONTHLY.
SHIFT ROCKER FORK APPLY ONE OR TWO DROPS OF OIL MONTHLY.
PLATEN BLOCK SHAFT BEARING APPLY ONE OR TWO DROPS OF OIL MONTHLY.
SHIFT ROCKER & SHIFT ROCKER ARM OIL SPARINGLY AT EACH PIVOT BEARING (2) MONTHLY.
PULL BAR LOCKS OUT LEVER APPLY ONE OR TWO DROPS OF OIL AT PIVOT & AT EACH ROLLER (2) MONTHLY.
BELL HAMMER APPLY OIL SPARINGLY AT POINT OF PIVOT MONTHLY.
TOE OF BELL PULL BAR APPLY OIL SPARINGLY AT POINT OF PIVOT MONTHLY.

CAUTION: WIPE OFF EXCESSIVE LUBRICANT. DO NOT DISTORT OR DISTURB SPRINGS
NOTE: 1. USE TYPE KS-7470 OIL FOR NORMAL OR HIGH TEMPERATURE (5° TO 55° C (41° TO 131° F.) FOR LOWER TEMPERATURES DILUTE THE KS-7470 WITH KEROSENE (HALF AND HALF).

NAVY LUBRICANT		STANDARD NAVY STOCK NUMBER				
SPECIFICATION	TITLE	1 PT.	1 QT.	1 GAL.	4 OZS	1 LB.
TELETYPE KS-7470	LUBRICATING OIL	N17-T-350011-463	N17-T-350002-698	N17-T-350009-698		
TELETYPE KS-7471	LUBRICATING GREASE				N17-T-350010-757	N17-T-350012-460

Figure 6–16. Reperforator, Lubrication Data

CAUTION: WIPE OFF EXCESSIVE LUBRICANT. DO NOT DISTORT OR DISTURB SPRINGS.
NOTE: 1. USE TYPE KS-7470 OIL FOR NORMAL OR HIGH TEMPERATURE —5° TO 55° C. (41° TO 131° F.) FOR LOWER TEMPERATURES. DILUTE THE KS-7470 WITH KEROSENE (HALF AND HALF).

NAVY LUBRICANT		STANDARD NAVY STOCK NUMBER				
SPECIFICATION	TITLE	1 PT.	1 QT.	1 GAL.	4 OZS.	1 LB.
TELETYPE KS-7470	LUBRICATING OIL	N17-T-350011-463	N17-T-350002-698	N17-T-350009-698		
TELETYPE KS-7471	LUBRICATING GREASE				N17-T-350010-757	N17-T-350012-460

NAVSHIPS 92378
AN/FGC-38, AN/FGC-38X, AN/FGC-39

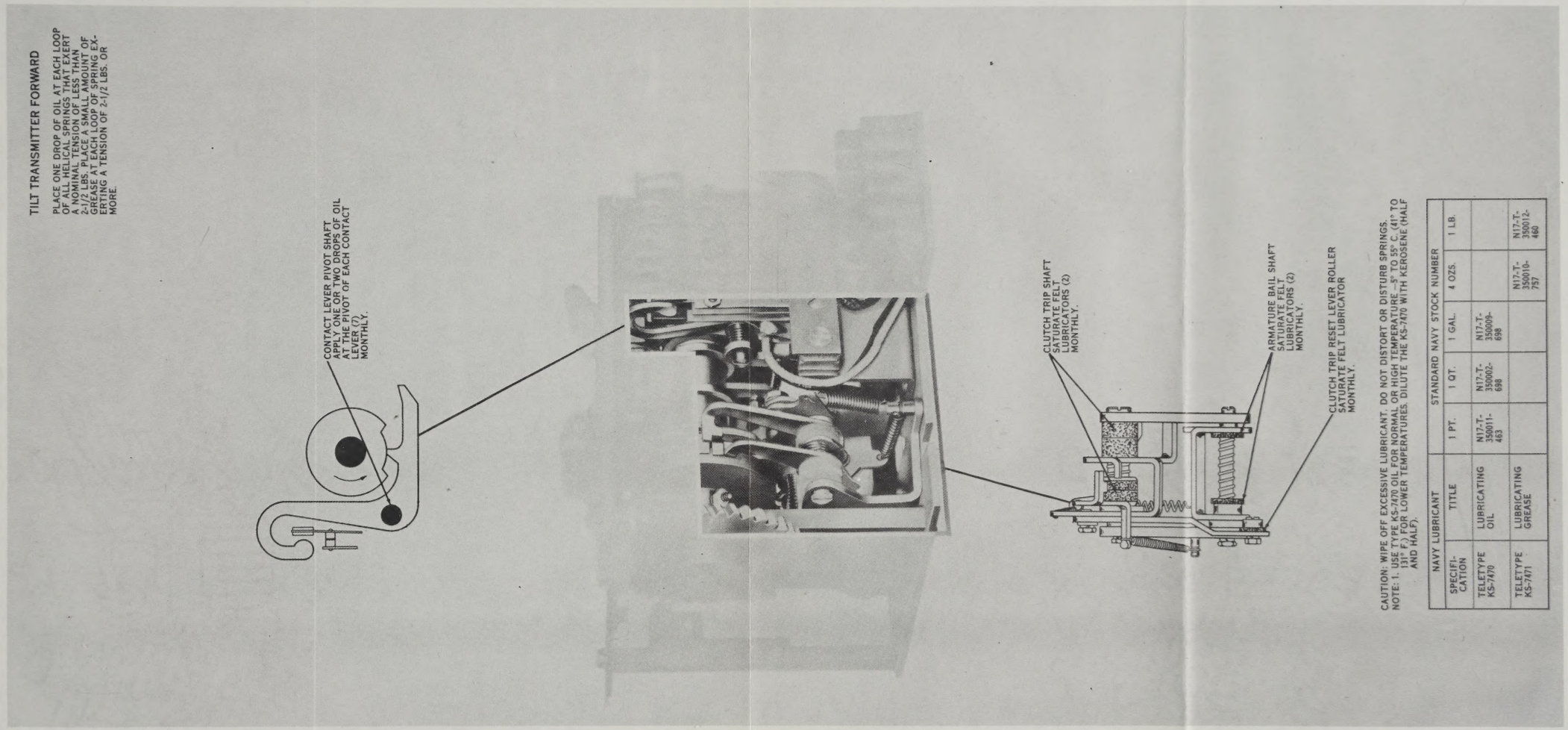
TILT TRANSMITTER FORWARD
PLACE ONE DROP OF OIL AT EACH LOOP OF ALL HELICAL SPRINGS THAT EXERT A NOMINAL TENSION OF LESS THAN 2-1/2 LBS. PLACE A SMALL AMOUNT OF GREASE AT EACH LOOP OF SPRING EXERTING A TENSION OF 2-1/2 LBS. OR MORE.
CONTACT LEVER PIVOT SHAFT. APPLY ONE OR TWO DROPS OF OIL AT THE PIVOT OF EACH CONTACT LEVER (7) MONTHLY.
CLUTCH TRIP SHAFT SATURATE FELT LUBRICATORS (2) MONTHLY.
ARMATURE BAIL SHAFT SATURATE FELT LUBRICATORS (2) MONTHLY.
CLUTCH TRIP RESET LEVER ROLLER SATURATE FELT LUBRICATOR MONTHLY.

CAUTION: WIPE OFF EXCESSIVE LUBRICANT. DO NOT DISTORT OR DISTURB SPRINGS.
NOTE: 1. USE TYPE KS-7470 OIL FOR NORMAL OR HIGH TEMPERATURE (-5° TO 55° C (41° TO 131° F)) OPERATION. FOR LOWER TEMPERATURES, DILUTE THE KS-7470 WITH KEROSENE (HALF AND HALF).

NAVY LUBRICANT		STANDARD NAVY STOCK NUMBER				
SPECIFICATION	TITLE	1 PT.	1 QT.	1 GAL.	4 OZS.	1 LB.
TELETYPE KS-7470	LUBRICATING OIL	N17-T-350011-463	N17-T-350002-698	N17-T-350009-698		
TELETYPE KS-7471	LUBRICATING GREASE				N17-T-350010-757	N17-T-350012-460

Figure 6—17. Distributor-Transmitter, Lubrication Data

CAUTION: WIPE OFF EXCESSIVE LUBRICANT. DO NOT DISTORT OR DISTURB SPRINGS.
NOTE: 1. USE TYPE KS-7470 OIL FOR NORMAL OR HIGH TEMPERATURE (-5° TO 55° C, (41° TO 131° F.) FOR LOWER TEMPERATURES, DILUTE THE KS-7470 WITH KEROSENE (HALF AND HALF).

NAVY LUBRICANT		STANDARD NAVY STOCK NUMBER					
SPECIFICATION	TITLE	1 PT.	1 QT.	1 GAL.	4 OZS.	1 LB.	
TELETYPE KS-7470	LUBRICATING OIL	N17-T-350011-463	N17-T-350002-698	N17-T-350009-698			
TELETYPE KS-7471	LUBRICATING GREASE				N17-T-350010-757		N17-T-350012-460

NAVSHIPS 92378
AN/FGC-38, AN/FGC-38X, AN/FGC-39

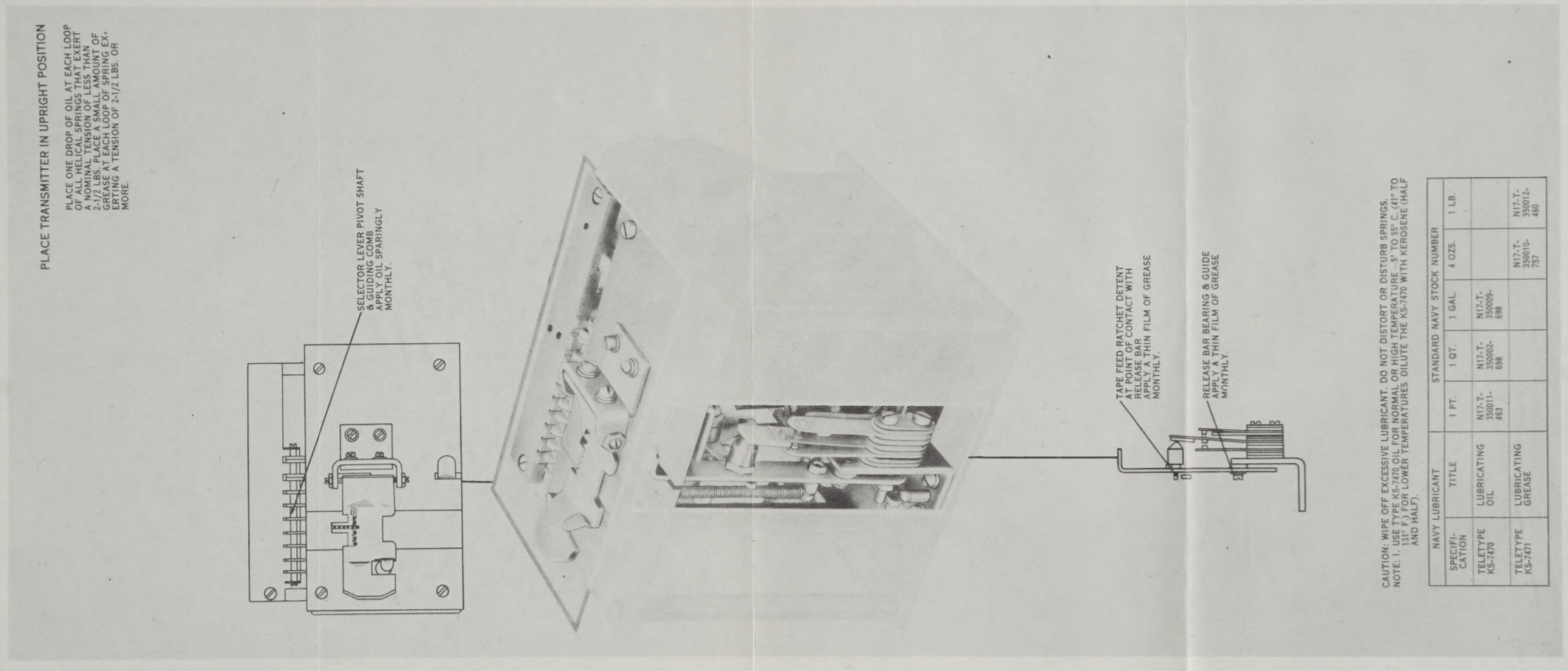
PLACE TRANSMITTER IN UPRIGHT POSITION
PLACE ONE DROP OF OIL AT EACH LOOP OF ALL HELICAL SPRINGS THAT EXERT A NOMINAL TENSION OF LESS THAN 2-1/2 LBS. PLACE A SMALL AMOUNT OF GREASE AT EACH LOOP OF SPRING EXERTING A TENSION OF 2-1/2 LBS. OR MORE.
SELECTOR LEVER PIVOT SHAFT & GUIDING COMB APPLY OIL SPARINGLY MONTHLY.
TAPE FEED RATCHET DETENT AT POINT OF CONTACT WITH RELEASE BAR APPLY A THIN FILM OF GREASE MONTHLY.
RELEASE BAR BEARING & GUIDE APPLY A THIN FILM OF GREASE MONTHLY.

CAUTION: WIPE OFF EXCESSIVE LUBRICANT. DO NOT DISTORT OR DISTURB SPRINGS.
NOTE: 1. USE TYPE KS-7470 OIL FOR NORMAL OR HIGH TEMPERATURE (5° TO 55° C (41° TO 131° F.) FOR LOWER TEMPERATURES DILUTE THE KS-7470 WITH KEROSENE (HALF AND HALF).

NAVY LUBRICANT		STANDARD NAVY STOCK NUMBER				
SPECIFICATION	TITLE	1 PT.	1 QT.	1 GAL.	4 OZS.	1 LB.
TELETYPE KS-7470	LUBRICATING OIL	N17-T-350011-463	N17-T-350002-698	N17-T-350009-698		
TELETYPE KS-7471	LUBRICATING GREASE				N17-T-350010-757	N17-T-350012-460

Figure 6—18. Distributor-Transmitter, Lubrication Data

CAUTION: WIPE OFF EXCESSIVE LUBRICANT. DO NOT DISTORT OR DISTURB SPRINGS.
NOTE: 1. USE TYPE KS-7470 OIL FOR NORMAL OR HIGH TEMPERATURE –5° TO 55° C. (41° TO 131° F.) FOR LOWER TEMPERATURES DILUTE THE KS-7470 WITH KEROSENE (HALF AND HALF).

NAVY LUBRICANT		STANDARD NAVY STOCK NUMBER				
SPECIFICATION	TITLE	1 PT.	1 QT.	1 GAL.	4 OZS.	1 LB.
TELETYPE KS-7470	LUBRICATING OIL	N17-T-350011-463	N17-T-350002-698	N17-T-350009-698		
TELETYPE KS-7471	LUBRICATING GREASE				N17-T-350010-757	N17-T-350012-460

NAVSHIPS 92378
AN/FGC-38, AN/FGC-38X, AN/FGC-39

TILT TRANSMITTER BACKWARD

PLACE ONE DROP OF OIL AT EACH LOOP OF ALL HELICAL SPRINGS THAT EXERT A NOMINAL TENSION OF LESS THAN 2-1/2 LBS. PLACE A SMALL AMOUNT OF GREASE AT EACH LOOP OF SPRING EXERTING A TENSION OF 2-1/2 LBS. OR MORE.

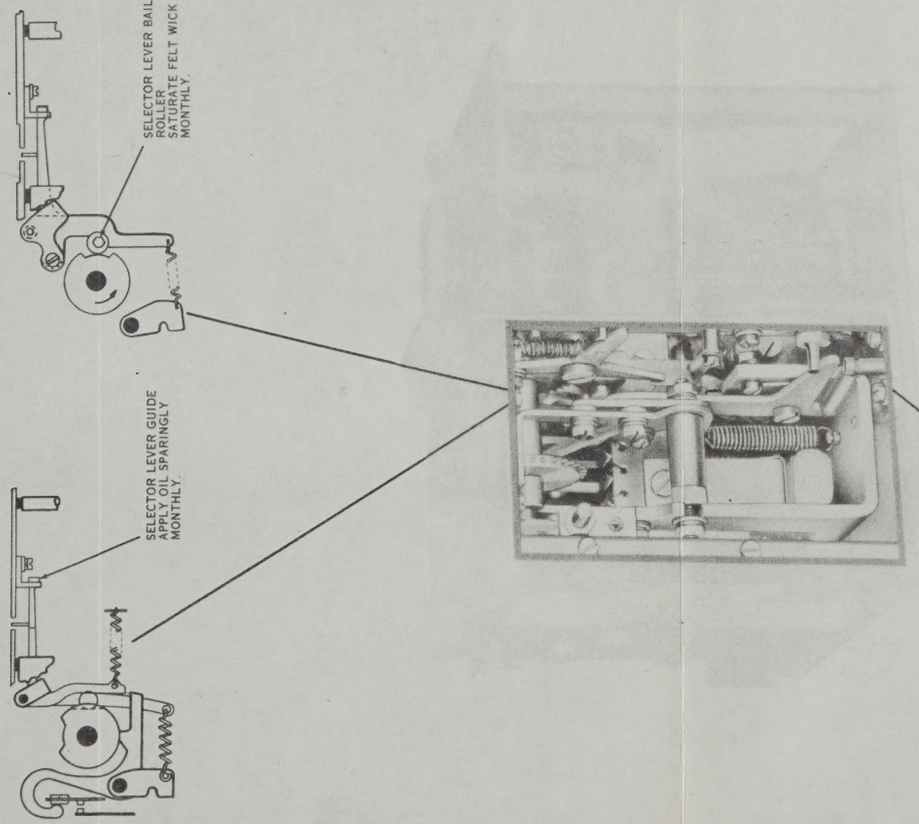

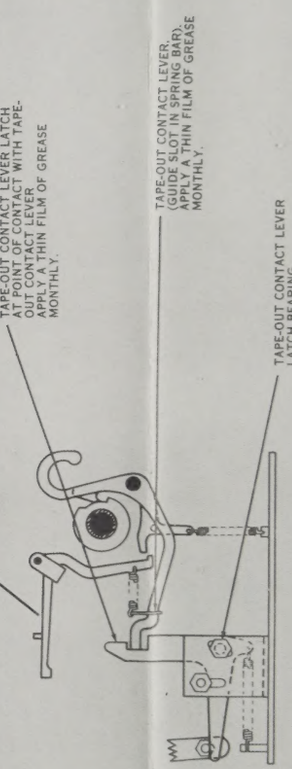
TAPE-OUT CONTACT LEVER LATCH AT POINT OF CONTACT WITH TAPE-OUT CONTACT LEVER APPLY A THIN FILM OF GREASE MONTHLY.
TAPE-OUT CONTACT LEVER. (GUIDE SLOT IN SPRING BAR). APPLY A THIN FILM OF GREASE MONTHLY.
TAPE-OUT CONTACT LEVER LATCH BEARING APPLY ONE OR TWO DROPS OF OIL MONTHLY.

CAUTION: WIPE OFF EXCESSIVE LUBRICANT. DO NOT DISTORT OR DISTURB SPRINGS.
NOTE: 1. USE TYPE KS-7470 OIL FOR NORMAL OR HIGH TEMPERATURE (5° TO 55° C (41° TO 131° F.). FOR LOWER TEMPERATURES DILUTE THE KS-7470 WITH KEROSENE (HALF AND HALF).

NAVY LUBRICANT		STANDARD NAVY STOCK NUMBER				
SPECIFICATION	TITLE	1 PT.	1 QT.	1 GAL.	4 OZS.	1 LB.
TELETYPE KS-7470	LUBRICATING OIL	N17-T-350111-463	N17-T-350002-698	N17-T-350009-698		
TELETYPE KS-7471	LUBRICATING GREASE				N17-T-350010-757	N17-T-350012-460

Figure 6—19. Distributor-Transmitter, Lubrication Data

CAUTION: WIPE OFF EXCESSIVE LUBRICANT. DO NOT DISTORT OR DISTURB SPRINGS.
NOTE: 1. USE TYPE KS-7470 OIL FOR NORMAL OR HIGH TEMPERATURE -5° TO 55° C. (41° TO 131° F.) FOR LOWER TEMPERATURES DILUTE THE KS-7470 WITH KEROSENE (HALF AND HALF).

NAVY LUBRICANT		STANDARD NAVY STOCK NUMBER				
SPECIFICATION	TITLE	1 PT.	1 QT.	1 GAL.	4 OZS.	1 LB.
TELETYPE KS-7470	LUBRICATING OIL	N17-T-350011-463	N17-T-350002-698	N17-T-350009-698		
TELETYPE KS-7471	LUBRICATING GREASE				N17-T-350010-757	N17-T-350012-460

NAVSHIPS 92378
AN/FGC-38, AN/FGC-38X, AN/FGC-39

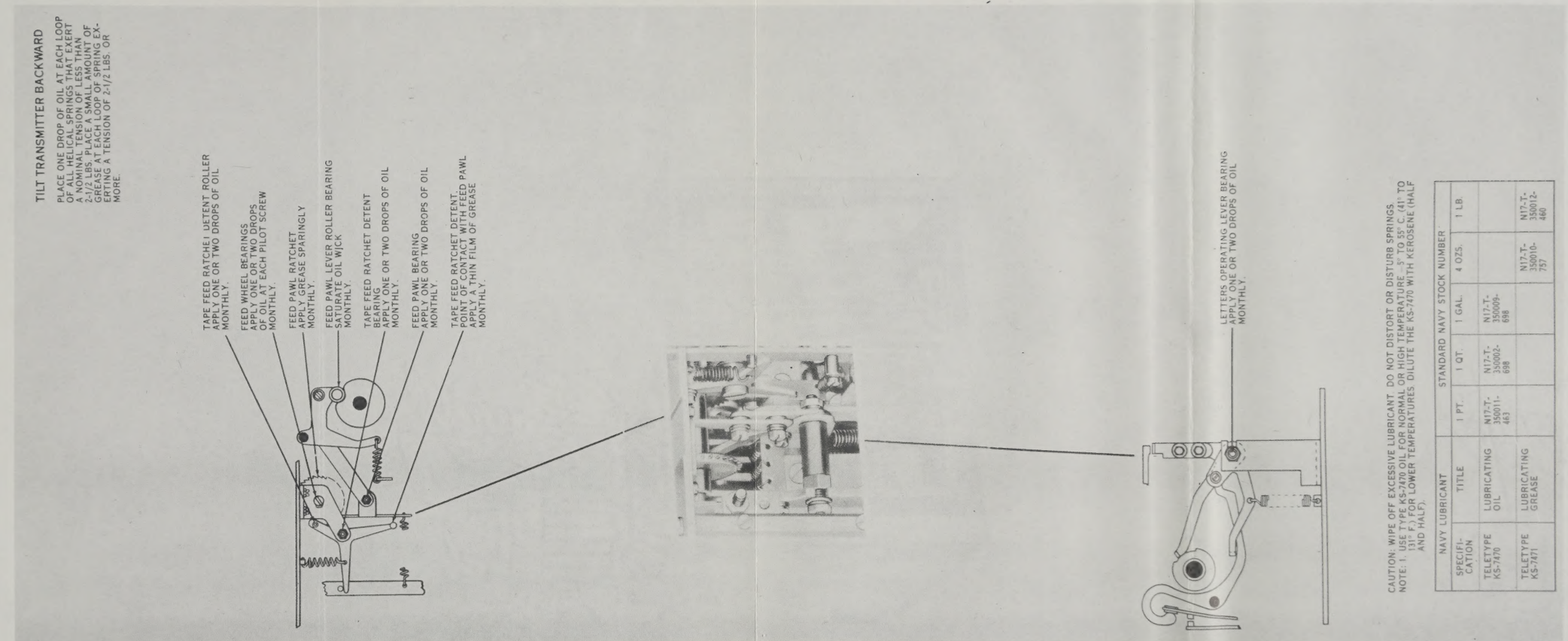
TILT TRANSMITTER BACKWARD
PLACE ONE DROP OF OIL AT EACH LOOP OF ALL HELICAL SPRINGS THAT EXERT A NOMINAL TENSION OF LESS THAN 2-1/2 LBS. PLACE A SMALL AMOUNT OF GREASE AT EACH LOOP OF SPRING EXERTING A TENSION OF 2-1/2 LBS. OR MORE.
TAPE FEED RATCHET DETENT ROLLER APPLY ONE OR TWO DROPS OF OIL MONTHLY.
FEED WHEEL BEARINGS APPLY ONE OR TWO DROPS OF OIL AT EACH PILOT SCREW MONTHLY.
FEED PAWL RATCHET APPLY GREASE SPARINGLY MONTHLY.
FEED PAWL LEVER ROLLER BEARING SATURATE OIL WICK MONTHLY.
TAPE FEED RATCHET DETENT BEARING APPLY ONE OR TWO DROPS OF OIL MONTHLY.
FEED PAWL BEARING APPLY ONE OR TWO DROPS OF OIL MONTHLY.
TAPE FEED RATCHET DETENT, POINT OF CONTACT WITH FEED PAWL APPLY A THIN FILM OF GREASE MONTHLY.
LETTERS OPERATING LEVER BEARING APPLY ONE OR TWO DROPS OF OIL MONTHLY.
CAUTION: WIPE OFF EXCESSIVE LUBRICANT. DO NOT DISTORT OR DISTURB SPRINGS.
NOTE: 1. USE TYPE KS-7470 OIL FOR NORMAL OR HIGH TEMPERATURE (-5° TO 55° C. (41° TO 131° F.) FOR LOWER TEMPERATURES DILUTE THE KS-7470 WITH KEROSENE (HALF AND HALF).
NAVY LUBRICANT
STANDARD NAVY STOCK NUMBER
SPECIFICATION
TITLE
1 PT.
1 QT.
1 GAL.
4 OZS.
1 LB.
TELETYPE KS-7470
LUBRICATING OIL
N17-T-350011-453
N17-T-350002-698
N17-T-350009-698
TELETYPE KS-7471
LUBRICATING GREASE
N17-T-350010-757
N17-T-350012-460

Figure 6—20. Distributor-Transmitter, Lubrication Data

CLUTCH TRIP RESET-CAM CAMMING SURFACE
APPLY A THIN FILM OF GREASE MONTHLY.
CLUTCH MAGNET ARMATURE BAIL LATCH SURFACE
APPLY ONE OR TWO DROPS OF OIL MONTHLY.

CAUTION: WIPE OFF EXCESSIVE LUBRICANT. DO NOT DISTORT OR DISTURB SPRINGS.
NOTE: 1. USE TYPE KS-7470 OIL FOR NORMAL OR HIGH TEMPERATURE (5° TO 55° C, 41° TO 131° F). FOR LOWER TEMPERATURES DILUTE THE KS-7470 WITH KEROSENE (HALF AND HALF).

NAVY LUBRICANT		STANDARD NAVY STOCK NUMBER					
SPECIFICATION	TITLE	1 PT.	1 QT.	1 GAL.	4 OZS.	1 LB
TELETYPE KS-7470	LUBRICATING OIL	N17-T-350011-463	N17-T-350002-698	N17-T-350009-698		
TELETYPE KS-7471	LUBRICATING GREASE				N17-T-350010-757	N17-T-350012-460

NAVSHIPS 92378
AN/FGC-38, AN/FGC-38X, AN/FGC-39

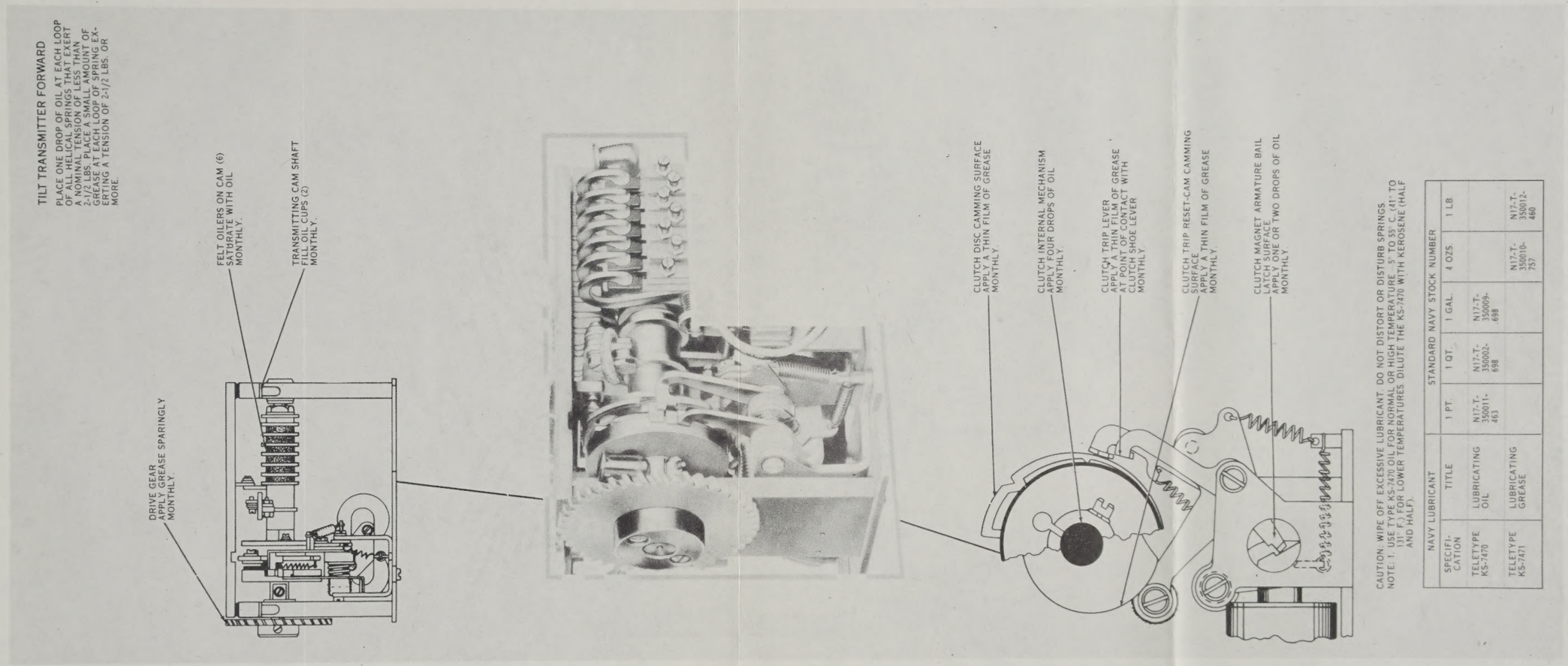
TILT TRANSMITTER FORWARD
PLACE ONE DROP OF OIL AT EACH LOOP OF ALL HELICAL SPRINGS THAT EXERT A NOMINAL TENSION OF LESS THAN 2-1/2 LBS. PLACE A SMALL AMOUNT OF GREASE AT EACH LOOP OF SPRING EXERTING A TENSION OF 2-1/2 LBS. OR MORE.
FELT OILERS ON CAM (6) SATURATE WITH OIL MONTHLY.
TRANSMITTING CAM SHAFT FILL OIL CUPS (2) MONTHLY.
DRIVE GEAR APPLY GREASE SPARINGLY MONTHLY.
CLUTCH DISC CAMMING SURFACE APPLY A THIN FILM OF GREASE MONTHLY.
CLUTCH INTERNAL MECHANISM APPLY FOUR DROPS OF OIL MONTHLY.
CLUTCH TRIP LEVER APPLY A THIN FILM OF GREASE AT POINT OF CONTACT WITH CLUTCH SHOE LEVER MONTHLY.
CLUTCH TRIP RESET-CAM CAMMING SURFACE APPLY A THIN FILM OF GREASE MONTHLY.
CLUTCH MAGNET ARMATURE BAIL LATCH SURFACE APPLY ONE OR TWO DROPS OF OIL MONTHLY.
CAUTION: WIPE OFF EXCESSIVE LUBRICANT. DO NOT DISTORT OR DISTURB SPRINGS
NOTE: 1. USE TYPE KS-7470 OIL FOR NORMAL OR HIGH TEMPERATURE. 5° TO 55° C. (41° TO 131° F.) FOR LOWER TEMPERATURES DILUTE THE KS-7470 WITH KEROSENE (HALF AND HALF).

NAVY LUBRICANT		STANDARD NAVY STOCK NUMBER				
SPECIFICATION	TITLE	1 PT.	1 QT.	1 GAL.	4 OZS.	1 LB.
TELETYPE KS-7470	LUBRICATING OIL	N17-T-350011-463	N17-T-350002-698	N17-T-350009-698		
TELETYPE KS-7471	LUBRICATING GREASE				N17-T-350010-757	N17-T-350012-460

Figure 6—21. Distributor-Transmitter, Lubrication Data

RIBBON WIND RATCHET (2)
APPLY 1 DROP OF OIL
MONTHLY.
RIBBON FEED RETAINER REVERSE ASSEMBLY
APPLY 1 DROP OF OIL AT SPRING AND PIVOT POINT
MONTHLY.

CAUTION: WIPE OFF EXCESSIVE LUBRICANT. DO NOT DISTORT OR DISTURB SPRINGS.
NOTE: 1. USE TYPE KS-7470 OIL FOR NORMAL OR HIGH TEMPERATURE –5° TO 55° C. (41° TO 131° F.) FOR LOWER TEMPERATURES DILUTE THE KS-7470 WITH KEROSENE (HALF AND HALF).

NAVY LUBRICANT		STANDARD NAVY STOCK NUMBER				
SPECIFICATION	TITLE	1 PT.	1 QT.	1 GAL.	4 OZS.	1 LB.
TELETYPE KS-7470	LUBRICATING OIL	N17-T-350011-463	N17-T-350002-698	N17-T-350009-698		
TELETYPE KS-7471	LUBRICATING GREASE				N17-T-350010-757	N17-T-350012-460

NAVSHIPS 92378
AN/FGC-38, AN/FGC-38X, AN/FGC-39

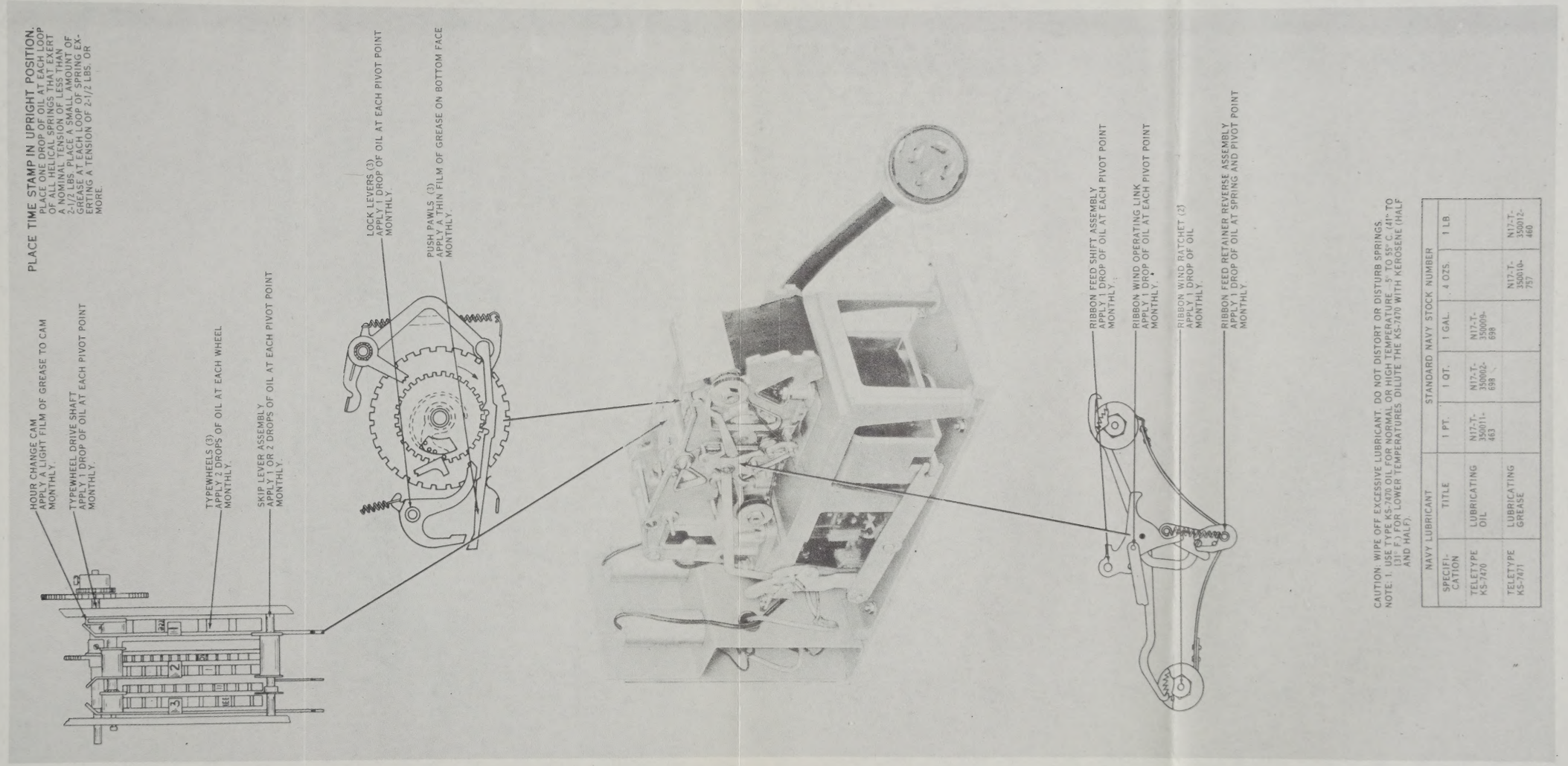
PLACE TIME STAMP IN UPRIGHT POSITION.
PLACE ONE DROP OF OIL AT EACH LOOP OF ALL HELICAL SPRINGS THAT EXERT A NOMINAL TENSION OF LESS THAN 2-1/2 LBS. PLACE A SMALL AMOUNT OF GREASE AT EACH LOOP OF SPRING EXERTING A TENSION OF 2-1/2 LBS. OR MORE.
HOUR CHANGE CAM
APPLY A LIGHT FILM OF GREASE TO CAM MONTHLY.
TYPEWHEEL DRIVE SHAFT
APPLY 1 DROP OF OIL AT EACH PIVOT POINT MONTHLY.
TYPEWHEELS (3)
APPLY 2 DROPS OF OIL AT EACH WHEEL MONTHLY.
SKIP LEVER ASSEMBLY
APPLY 1 OR 2 DROPS OF OIL AT EACH PIVOT POINT MONTHLY.
LOCK LEVERS (3)
APPLY 1 DROP OF OIL AT EACH PIVOT POINT MONTHLY.
PUSH PAWLS (3)
APPLY A THIN FILM OF GREASE ON BOTTOM FACE MONTHLY.
RIBBON FEED SHIFT ASSEMBLY
APPLY 1 DROP OF OIL AT EACH PIVOT POINT MONTHLY.
RIBBON WIND OPERATING LINK
APPLY 1 DROP OF OIL AT EACH PIVOT POINT MONTHLY.
RIBBON WIND RATCHET (2)
APPLY 1 DROP OF OIL MONTHLY.
RIBBON FEED RETAINER REVERSE ASSEMBLY
APPLY 1 DROP OF OIL AT SPRING AND PIVOT POINT MONTHLY.

CAUTION: WIPE OFF EXCESSIVE LUBRICANT. DO NOT DISTORT OR DISTURB SPRINGS.
NOTE: 1. USE TYPE KS-7470 OIL FOR NORMAL OR HIGH TEMPERATURE (5° TO 55° C (41° TO 131° F.)) FOR LOWER TEMPERATURES DILUTE THE KS-7470 WITH KEROSENE (HALF AND HALF).

NAVY LUBRICANT		STANDARD NAVY STOCK NUMBER				
SPECIFICATION	TITLE	1 PT.	1 QT.	1 GAL.	4 OZS.	1 LB.
TELETYPE KS-7470	LUBRICATING OIL	N17-T-350011-463	N17-T-350002-698	N17-T-350009-698		
TELETYPE KS-7471	LUBRICATING GREASE				N17-T-350010-757	N17-T-350012-460

Figure 6—22. Time Stamp, Lubrication Data

CAUTION: WIPE OFF EXCESSIVE LUBRICANT. DO NOT DISTORT OR DISTURB SPRINGS.
NOTE: 1. USE TYPE KS-7470 OIL FOR NORMAL OR HIGH TEMPERATURE. -5° TO 55° C. (41° TO 131° F.) FOR LOWER TEMPERATURES DILUTE THE KS-7470 WITH KEROSENE (HALF AND HALF).

NAVY LUBRICANT		STANDARD NAVY STOCK NUMBER				
SPECIFICATION	TITLE	1 PT.	1 QT.	1 GAL.	4 OZS.	1 LB.
TELETYPE KS-7470	LUBRICATING OIL	N17-T-350011-463	N17-T-350002-698	N17-T-350009-698		
TELETYPE KS-7471	LUBRICATING GREASE				N17-T-350010-757	N17-T-350012-460

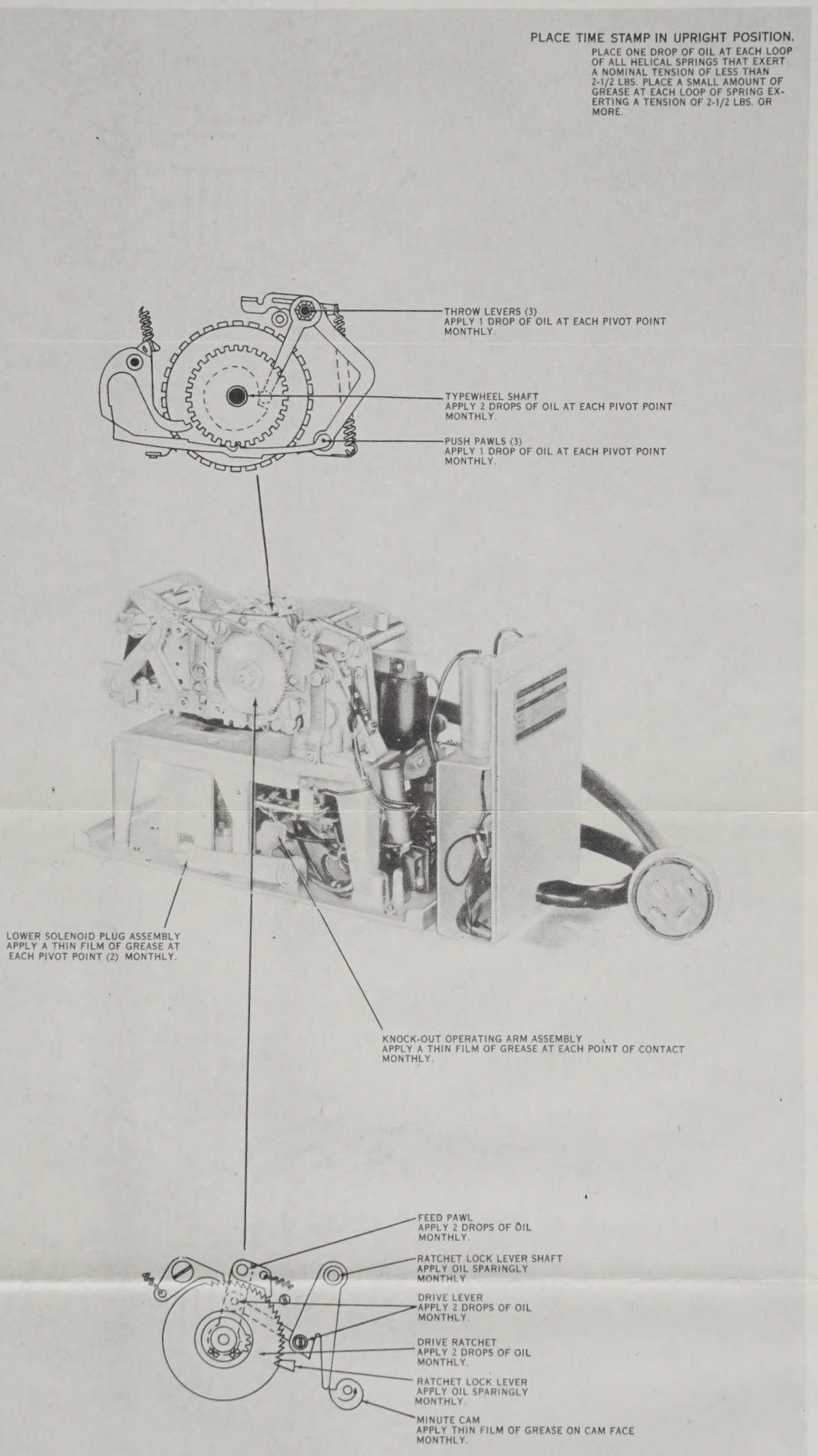
PLACE TIME STAMP IN UPRIGHT POSITION.
PLACE ONE DROP OF OIL AT EACH LOOP OF ALL HELICAL SPRINGS THAT EXERT A NOMINAL TENSION OF LESS THAN 2-1/2 LBS. PLACE A SMALL AMOUNT OF GREASE AT EACH LOOP OF SPRING EXERTING A TENSION OF 2-1/2 LBS. OR MORE.
THROW LEVERS (3)
APPLY 1 DROP OF OIL AT EACH PIVOT POINT MONTHLY.
TYPEWHEEL SHAFT
APPLY 2 DROPS OF OIL AT EACH PIVOT POINT MONTHLY.
PUSH PAWLS (3)
APPLY 1 DROP OF OIL AT EACH PIVOT POINT MONTHLY.
LOWER SOLENOID PLUG ASSEMBLY
APPLY A THIN FILM OF GREASE AT EACH PIVOT POINT (2) MONTHLY.
KNOCK-OUT OPERATING ARM ASSEMBLY
APPLY A THIN FILM OF GREASE AT EACH POINT OF CONTACT MONTHLY.
FEED PAWL
APPLY 2 DROPS OF OIL MONTHLY.
RATCHET LOCK LEVER SHAFT
APPLY OIL SPARINGLY MONTHLY.
DRIVE LEVER
APPLY 2 DROPS OF OIL MONTHLY.
DRIVE RATCHET
APPLY 2 DROPS OF OIL MONTHLY.
RATCHET LOCK LEVER
APPLY OIL SPARINGLY MONTHLY.
MINUTE CAM
APPLY THIN FILM OF GREASE ON CAM FACE MONTHLY.

CAUTION: WIPE OFF EXCESSIVE LUBRICANT. DO NOT DISTORT OR DISTURB SPRINGS.
NOTE: 1. USE TYPE KS-7470 OIL FOR NORMAL OR HIGH TEMPERATURE – 5° TO 55° C. (41° TO 131° F.) FOR LOWER TEMPERATURES DILUTE THE KS-7470 WITH KEROSENE (HALF AND HALF).

NAVY LUBRICANT		STANDARD NAVY STOCK NUMBER				
SPECIFICATION	TITLE	1 PT.	1 QT.	1 GAL.	4 OZS.	1 LB.
TELETYPE KS-7470	LUBRICATING OIL	N17-T-350011-463	N17-T-350002-698	N17-T-350009-698		
TELETYPE KS-7471	LUBRICATING GREASE				N17-T-350010-757	N17-T-350012-460

Figure 6–23. Time Stamp, Lubrication Data

INSTRUCTION BOOK

for

TELETYPEWRITER SETS AN/FGC-38, AN/FGC-38X, and AN/FGC-39

SECTION 7

CORRECTIVE MAINTENANCE

TABLE OF CONTENTS

Paragraph		Page
1.	Theory of Localization	7-1
2.	System Trouble Shooting	7-1
3.	Unit Trouble Shooting	7-5
4.	Resistance and Voltage Charts	7-14
5.	Electrical Adjustments	7-15
a.	Power Supply Adjustment	7-15
b.	Line Current Adjustment	7-16
6.	Mechanical Adjustments	7-18
a.	Electrical Equipment Cabinet CY-1523/FGC	7-18
	(1) Base	7-18
	(2) Center Support Frame	7-18
	(3) Control Panel Support	7-18
	(4) Slide	7-18
	(5) Sliding Tray	7-18
	(6) Rear Control Panel	7-18
	(7) Rear Doors	7-18
	(8) Control Panel	7-18
	(9) Front Doors	7-18
	(10) Bottom Front Doors	7-18
	(11) Patching Panel	7-18
	(12) Doors and Panels	7-18
	(13) Tape Container	7-18
	(14) Tape Container and Tape-out Contacts	7-21
b.	Electrical Equipment Cabinet CY-1524/FGC	7-21
	(1) Patch Frame Assembly	7-21
	(2) Control Panel Shelf	7-21
	(3) Sliding Shelf	7-21
	(4) Front Doors	7-21
	(5) Rear Doors	7-21
	(6) Tape Holder Frame Assembly	7-21
c.	Electrical Equipment Cabinet CY-1522/FGC	7-21
	(1) Base	7-21
	(2) Disappearing Door Adjustment	7-21
	(3) Rear Door	7-21
	(4) Lower Front Hinged Door	7-22
	(5) Slide and Tray	7-22
	(6) Shelf Plate	7-22
	(7) Tape Reel Tape-out Contact Lever	7-22
	(8) Tape Reel Tape-out Contacts	7-22
	(9) Tape Reel Tape-out Adjusting Screw	7-22
	(10) Tape Reel Tape-out Contact Lever Spring Tension	7-22
d.	Reeling Machine RL-173/FGC	7-22
	(1) Clutch Shaft Alignment	7-22
	(2) Drive Shaft End Play	7-22
	(3) Drive Shaft Gear	7-22
	(4) Motor Position	7-22
	(5) Stop Lever	7-29
	(6) Stop Lever Guide	7-29
	(7) Tape Lever	7-29
	(8) Trip Lever	7-29
	(9) Clutch Torque	7-29
	(10) Tape Lever Spring Tension	7-29
	(11) Stop Lever Spring Tension	7-29
	(12) Reel Core Spring	7-29
e.	Governed Motor	7-30
	(1) Motor Speed Adjusting Lever and Governor Adjusting Bracket	7-30
	(2) Governor Contacts	7-31
	(3) Governor Shell	7-31
	(4) Speed Adjusting Wheel Friction Washer Spring	7-32
	(5) Speed Adjusting Lever Stop Plate	7-32
	(6) Adjusting Lever Wearing Strip	7-32
	(7) Inner and Outer Disk Contact Springs	7-32
	(8) Governor Brush Spring Plate Bracket	7-32
	(9) Governor Brush Springs	7-33
	(10) Governor Adjusting Bracket	7-33
	(11) Armature End Thrust Spring Pressure	7-33
f.	Time Stamp MX-1527/U Adjustments	7-33
	(1) Hour and Month Push Pawl	7-33
	(2) Date Push Pawl	7-33
	(3) Hour and Month Feed Tooth	7-33
	(4) Lock Lever	7-33
	(5) Date Cam Wiper Arm	7-35
	(6) Month Cam Wiper Arm	7-35
	(7) Month Throw Lever Spring Tension	7-35
	(8) Date Throw Lever Spring Tension	7-36
	(9) Hour Throw Lever Spring Tension	7-36
	(10) Hour Change	7-36
	(11) Variable Month Change Lever	7-36
	(12) Minute Drive Pawl	7-36
	(13) Drive Pawl Stop Pin	7-36
	(14) Print Transfer Relay Contacts	7-36
	(15) Ribbon Feed and Ribbon Reverse	7-37

TABLE OF CONTENTS—(Cont'd)

Paragraph		Page
g.	Reperforator Adjustments	7-37
	(1) Main Shaft Clutch Spring Tension	7-37
	(2) Selector Separator Plates	7-37
	(3) Main Shaft	7-38
	(4) Main Shaft Clutch Throwout Lever	7-38
	(5) Main Shaft Clutch Throwout Lever Spring Tension	7-38
	(6) Motor Gears	7-38
	(7) Armature Lever Pivot Screw	7-39
	(8) Selector Magnet	7-39
	(9) Selector Arm Pivot Screws	7-39
	(10) Selector Arm Bracket	7-39
	(11) Locking Wedge	7-41
	(12) Locking Lever Spring Tension	7-41
	(13) Selector Arm Stop Detent	7-42
	(14) Selector Arm Stop Detent Spring Tension	7-42
	(15) Selector Lever Spring Tension	7-42
	(16) Selector Magnet Bracket Position Adjusting Arm	7-42
	(17) Selector Magnet Bracket	7-42
	(18) Armature Lever Spring	7-43
	(19) Selector Arm Operating Screw	7-43
	(20) Selector Arm Spring	7-43
	(21) Stop Lever Eccentric Screw	7-44
	(22) Trip Latch Spring	7-44
	(23) Stop Lever Spring Tension	7-44
	(24) Selector Stop Arm and Stop Lever Engagement Positioning Link	7-45
	(25) Tape Feed-out Lever	7-46
	(26) Trip-off Screw	7-46
	(27) Function Bar Spring Brackets	7-46
	(28) Pull Bar Spring Tension	7-46
	(29) Main Bail Guides	7-47
	(30) Pull Bar Guide	7-47
	(31) Main Bail Adjusting Screw (Preliminary)	7-48
	(32) Ribbon Spool Cups	7-48
	(33) Ribbon Spool Shaft Gears	7-48
	(34) Ribbon Spool Shaft Brackets	7-48
	(35) Ribbon Spool Shaft Compression Spring	7-48
	(36) Ribbon Spool Shaft Slots	7-49
	(37) Left Ribbon Reverse Arm Shaft	7-49
	(38) Right Ribbon Reverse Arm Shaft	7-49
	(39) Ribbon Reverse Pawl Link	7-50
	(40) Ribbon Feed Shaft Safety Spring Compression	7-50
	(41) Ribbon Feed Shaft Detent Plunger Spring Compression	7-50
	(42) Ribbon Feed Lever Spring Tension	7-51
	(43) Ribbon Check Pawl	7-51
	(44) Ribbon Check Pawl Spring	7-51
	(45) Ribbon Feed Pawl	7-51
	(46) Ribbon Feed Pawl Spring	7-52
	(47) Right and Left Ribbon Reverse Pawls Spring Tension	7-52
	(48) Left Function Pull Bar Spring Bracket	7-52
	(49) Right Function Pull Bar Spring Bracket	7-52
	(50) Pull Bar Guard	7-52
	(51) Punch Arm Casting	7-53
	(52) Punch Bail Bearings	7-53
	(53) Punch Bail Front Pivot Bearing Plate	7-54
	(54) Feed Roll Bearings	7-54
	(55) Tape Tension Lever Stud	7-54
	(56) Feed Roll Detent (Preliminary)	7-55
	(57) Feed Pawl Eccentric (Preliminary)	7-55
	(58) Feed Pawl Spring Tension	7-55
	(59) Code Bar Bell Cranks	7-55
	(60) Main Bail Adjusting Screw (Final)	7-56
	(61) Vertical Lever Pilot Screw	7-56
	(62) Punch Selector Finger Backstop	7-56
	(63) Punch Bail Link	7-56
	(64) Punch Bail Upstop Screw	7-57
	(65) Feed Roll Detent (Final)	7-57
	(66) Feed Pawl Eccentric (Final)	7-57
	(67) Feed-out Roller Eccentric	7-57
	(68) Tape Stripper Plate	7-58
	(69) Tape Tension Lever Spring	7-58
	(70) Shift Rocker Post	7-58
	(71) Shift Rocker Lever Post	7-59
	(72) Shift Bell Crank	7-59
	(73) Shift Bell Crank Guide	7-59
	(74) Shift Rocker	7-59
	(75) Ribbon Guide	7-59
	(76) Feed Roll Detent Lever Spring Tension	7-59
	(77) Punch Arm Spring Tension	7-60
	(78) Punch Bell Crank Spring Tension	7-60
	(79) Platen Shift Spring Tension	7-60

TABLE OF CONTENTS—(Cont'd)

Paragraph		Page
(80)	Platen Yield Spring Tension	7–60
(81)	Shift Lever Spring Tension	7–60
(82)	Tape Guide Spring	7–60
(83)	Figures Pull Bar	7–60
(84)	Main Bail Spring	7–60
(85)	Main Bail Cam Clutch Torque	7–61
(86)	Selector Clutch	7–61
(87)	Pull Bar Lockout Lever	7–62
(88)	Bell Hammer Post	7–62
(89)	Bell Hammer Eccentric Screw	7–62
(90)	Signal Bell	7–62
(91)	Tape Feed-out Clutch Teeth	7–63
(92)	Feed-out Clutch Detent Eccentric	7–63
(93)	Clutch Trip Armature Bail Lever	7–63
(94)	Clutch Magnet Switch	7–63
(95)	Metering Intermediate Gear	7–64
(96)	Metering Worm Follower Stud	7–64
(97)	Metering Tape Feed-out Switch	7–65
(98)	Metering Tape Feed-out Adjusting Screw	7–65
(99)	Synchronous Motor Starting Switch Spring Tension	7–65
(100)	Synchronous Motor End Thrust Spring Tension	7–65
(101)	Rangefinder Orientation	7–65
b.	Distributor-Transmitters	7–65
(1)	Transmitting Cam Sleeve End Play	7–65
(2)	Clutch Magnet Bracket	7–65
(3)	Clutch Trip Lever and Latch Lever	7–65
(4)	Clutch Trip Reset Lever	7–66
(5)	Clutch Magnet Armature Spring Tension	7–66
(6)	Clutch Trip Lever Spring Tension	7–66
(7)	Clutch Latch Lever Spring Tension	7–66
(8)	Trip Lever Shaft Compression Spring	7–67
(9)	Clutch Shoe Mechanism	7–67
(10)	Clutch Shoe Lever Spring Tension	7–68
(11)	Clutch Spring Tension	7–69
(12)	Transmitting Contact Gap	7–69
(13)	Transmitting Contact Spring Pressure (Preliminary)	7–69
(14)	Transmitting Contact Spring Pressure (Final)	7–70
(15)	Comb Shaft Retainer	7–70
(16)	Tape-out Contact Lever Latch	7–71
(17)	Tape-out Contact Lever Latch Spring Tension	7–71
(18)	Tape-out Contact Gap	7–71
(19)	Tape-out Contact Spring Pressure	7–71
(20)	Tape-out Operating Lever Spring Tension	7–71
(21)	Release Bar Contact	7–72
(22)	Release Bar Spring Tension	7–72
(23)	Selector Lever Comb	7–73
(24)	Tape-out Sensing Lever	7–73
(25)	Top Plate	7–74
(26)	Feed Wheel	7–74
(27)	Selector Lever Bail	7–75
(28)	Selector Lever Bail Spring Tension	7–75
(29)	Selector Lever Spring Tension	7–75
(30)	Tape-out Sensing Lever Spring Tension	7–75
(31)	Feed Wheel Detent	7–75
(32)	Selector Lever Guide	7–76
(33)	Tape Feed Ratchet Wheel Detent Spring Tension	7–76
(34)	Feed Pawl Lever	7–76
(35)	Feed Pawl Arm Spring Tension	7–76
(36)	Feed Pawl Spring Tension	7–76
(37)	Tape Lid Pivot Screw	7–77
(38)	Tape Lid (Vertical)	7–77
(39)	Tape Lid (Horizontal)	7–77
(40)	Tape Lid Latch Spring	7–78
(41)	Tape Lid Latch Spring Tension	7–78
(42)	Letters Operating Lever	7–78
(43)	Letters Operating Lever Vertical Extension	7–78
(44)	Letters Operating Lever Horizontal Extension	7–79
(45)	Letters Operating Lever Horizontal Extension Spring Tension	7–79
(46)	Release Bar Latch	7–80
(47)	Door Stop Plate	7–80
(48)	Tape-out Contact Lever Upstop	7–80
i.	Distributor-Transmitter Base Adjustments	7–80
(1)	Main Shaft	7–80
(2)	Motor Pinion	7–80
(3)	Motor Pinion Backlash	7–81

TABLE OF CONTENTS—(Cont'd)

Paragraph		Page
	(4) Gear Guard	7-81
	(5) Slip Connector Brackets	7-81
	(6) Slip Connector	7-81
	(7) Cover	7-82
	(8) Door Stop Screw	7-82
	(9) Tape Winder Shaft Bearing Alignment	7-82
	(10) Check Pawl Spring Tension	7-82
	(11) Feed Pawl Spring Tension	7-82
	(12) Ratchet Wheel Hub End Play	7-82
	(13) Take-up Reel Clutch Torque	7-82
	(14) Check Pawl	7-83
	(15) Take-up Reel Position	7-83
	(16) Pivot Arm	7-84
	(17) Pivot Arm Latch	7-84
	(18) Tight Tape Arm	7-84
	(19) Tape Reel Stop Pawl Spring Tension	7-84
	(20) Rewind Reel Slack Arm	7-84
	(21) Rewind Reel Slack Arm Spring Tension	7-84
7.	Relay Cleaning, Testing, and Adjusting	7-84
a.	Definitions	7-84
	(1) Electrical Definitions	7-84
	(2) Mechanical Definitions	7-84
	(3) Relay Contact Numbering and Winding Locations	7-84
	(4) Parts of the Relays	7-85
b.	General Relay Adjustment and Repair Procedures	7-85
	(1) General	7-85
	(2) Preparation	7-85
	(3) Cleaning	7-86
	(4) Burnishing	7-86
	(5) Inspection and Testing Procedures	7-87
	(6) Relay Adjustment Table	7-88
	(7) Tools and Test Equipment	7-88
c.	Testing and Adjusting Class B Relays K-101, K-102, K-103, K-202, K-203, K-204, K-205, K-207, K-208, K-209, and K-210	7-88
	(1) Alignment	7-88
	(2) Heelpiece Air Gap	7-89
	(3) Armature Travel (Stroke)	7-94
	(4) Spring Gauging	7-94
	(5) Spring Tensioning	7-95
d.	Testing and Adjusting the Class S Relay K-104	7-96
	(1) Alignment	7-96
	(2) Armature Travel (Stroke)	7-97
	(3) Spring Gauging	7-97
	(4) Spring Tensioning	7-97
e.	Testing and Adjusting WE280BA Relays K-105 and K-206	7-99
8.	Removal and Repair	7-102
a.	General	7-102
b.	Disassembly	7-102
	(1) Disassembly of Governed Motor for Repairs	7-102
	(2) Disassembly of Synchronous Motor for Major Repairs	7-104
	(3) Disassembly of the Time Stamp	7-104
	(4) Disassembly of Reperforators	7-106
	(5) Removal of Components from Distributor-Transmitter Base (Numbering)	7-107
	(6) Disassembly of Message Base	7-108
	(7) Disassembly of Distributor-Transmitters	7-108
c.	Assembly	7-108
	(1) Reassembly of Governed Motor	7-108
	(2) Reassembly of Synchronous Motor	7-109
	(3) Reassembly of Time Stamp	7-110
	(4) Reassembly of the Reperforators	7-111
	(5) Reassembly of Distributor-Transmitter Base (Numbering)	7-111
	(6) Reassembly of the Message Base	7-111
	(7) Reassembly of the Distributor-Transmitters	7-111
d.	Component Identification and Exploded Views	7-111
e.	Wiring and Schematic Diagrams	7-113

LIST OF ILLUSTRATIONS

Figure	Title	Page
7-1	Power Supply PP-987/U, Adjustments	7-16
7-2	Control Panel SB-358/FGC, Line Current Adjustment	7-17
7-3	Receiver Cabinet, Adjustments	7-19
7-4	Transmitter Cabinet, Adjustments	7-23
7-5	Monitor Cabinet, Adjustments	7-25
7-6	Reeling Machine Adjustments	7-27
7-7	Reeling Machine Adjustments	7-28
7-8	Reeling Machine Adjustments	7-29
7-9	Governor Adjusting and Brush Spring Plate Brackets	7-30
7-10	Governor Contacts, Speed Adjusting Wheel Friction Washer Spring, and Speed Adjusting Spring	7-31
7-11	Speed Adjusting Lever Stop Plate, Wearing Strip, and Governor Brush Springs	7-31
7-12	Positioning Governor Contacts	7-32
7-13	Inner and Outer Disk Contact Springs	7-32
7-14	Top View of Typewheels	7-33
7-15	Push Pawl	7-34
7-16	Feed Tooth	7-34
7-17	Lock Lever	7-34
7-18	Maximum Clearance of Lock Lever	7-35
7-19	Variable Month Change Lever	7-35
7-20	Minute Drive Assembly	7-36
7-21	Print Transfer Relay Contacts	7-36
7-22	Ribbon Feed	7-37
7-23	Main Shaft Clutch Spring Tension	7-37
7-24	Separator Plate Leaf Spring	7-38
7-25	Main Shaft Clutch Throwout Lever, Clutch Spring Tension and Main Bail	7-38
7-26	Selector Arm and Armature Lever	7-39
7-27	Selector Magnet Bracket and Armature Lever Spring	7-40
7-28	Selector Arm Bracket	7-40
7-29	Selector Lever Spring Tension and Locking Wedge	7-41
7-30	Selector Arm Stop Detent Eccentric and Spring Tension	7-42
7-31	Selector Magnet Bracket	7-43
7-32	Selector Arm Operating Screw	7-43
7-33	Selector Arm Spring	7-44
7-34	Stop Lever Eccentric, Trip Latch Spring Compression, and Trip-off Screw	7-44
7-35	Stop Lever Spring Tension	7-45
7-36	Selector Stop Arm and Stop Lever Engagement Positioning Link	7-45
7-37	Trip Latch	7-45
7-38	Function Bar Spring Bracket	7-46
7-39	Pull Bar Spring Tension	7-46
7-40	Main Bail Roller Guide	7-47
7-41	Pull Bar Guide	7-47
7-42	Ribbon Spool Cup	7-48
7-43	Ribbon Spool Shaft Gears and Bracket	7-49
7-44	Ribbon Reverse Arm Shaft	7-49
7-45	Ribbon Reverse Pawl Link	7-50
7-46	Ribbon Feed Shaft Safety Spring Compression and Reverse Pawl Spring Tension	7-50
7-47	Ribbon Feed Shaft Detent Plunger Spring Compression	7-51
7-48	Ribbon Feed Lever Spring Tension	7-51
7-49	Ribbon Check and Feed Pawl Springs	7-51
7-50	Function Pull Bar Spring Brackets	7-52
7-51	Pull Bar Guard	7-53
7-52	Punch Arm Pilot Screws	7-53
7-53	Tape Feed Pawl Spring Tension	7-53
7-54	Punch Bail Front Pivot Bearings	7-54
7-55	Feed Roll Bearings and Platen Shift and Yield Spring Tension	7-54
7-56	Tape Tension Lever Stud	7-55
7-57	Feed Roll Detent	7-55
7-58	Feed Pawl Eccentric, Vertical Lever Pivot Screw, Punch Arm, and Punch Bell Crank Spring Tension	7-56
7-59	Code Bar Bell Crank and Main Bail Adjusting Screw	7-57
7-60	Tape Tension Lever Spring and Feed Roll Detent Lever Spring Tension	7-58
7-61	Platen Shift Rocker Post and Shift Bell Crank	7-58
7-62	Shift Rocker Lever Post, Shift Bell Crank Guide, and Shift Rocker	7-59
7-63	Figures Pull Bar	7-60
7-64	Main Bail Cam Clutch Torque	7-61
7-65	Selector Clutch	7-61
7-66	Signal Bell Pull Bar Lockout Lever (Figures Position)	7-62
7-67	Signal Bell Pull Bar Lockout Lever (Letters Position)	7-62
7-68	Bell Hammer	7-63

LIST OF ILLUSTRATIONS—(Cont'd)

Figure	Title	Page
7-69	Tape Feed-out Clutch	7-63
7-70	Feed-out Clutch Detent Eccentric and Trip Armature Bail Lever	7-64
7-71	Clutch Magnet Switch and Metering Worm Follower Stud	7-64
7-72	Metering Intermediate Gear	7-64
7-73	Transmitting Cam Sleeve End Play	7-66
7-74	Clutch Magnet Bracket, and Trip and Latch Lever Spring Tensions	7-66
7-75	Clutch Trip and Latch Levers	7-67
7-76	Clutch Trip Reset Lever and Magnet Armature Spring Tension	7-67
7-77	Clutch Shoe Mechanism	7-68
7-78	Clutch Shoe Lever Spring Tension	7-68
7-79	Clutch Shoe Spring Tension	7-68
7-80	Transmitting Contact Cap and Selector Lever Spring Tension	7-69
7-81	Transmitting Contact Spring—Short	7-69
7-82	Transmitting Contact Spring—Long (Preliminary)	7-70
7-83	Transmitting Contact Spring—Long (Final)	7-70
7-84	Comb Shaft Retainer	7-70
7-85	Tape-out Contact Lever Latch	7-71
7-86	Tape-out Contact Lever Latch and Sensing Lever Spring Tensions	7-71
7-87	Tape-out Contact Gap	7-71
7-88	Tape-out Contact Operating Lever Spring Tension and Tape-out Contact Spring Pressure	7-72
7-89	Release Bar Contact and Spring Tensions	7-72
7-90	Selector Lever Comb	7-72
7-91	Tape-out Sensing Lever	7-73
7-92	Placement of Bending Tool on Tape-out Sensing Lever (Horizontal Leg)	7-73
7-93	Placement of Bending Tool on Tape-out Sensing Lever (Vertical Leg)	7-73
7-94	Top Plate	7-74
7-95	Feed Wheel	7-74
7-96	Selector Lever Bail and Bail Spring Tension	7-75
7-97	Feed Wheel Detent	7-75
7-98	Feed Pawl and Feed Wheel Detent Spring Tensions	7-76
7-99	Feed Pawl Lever	7-76
7-100	Tape Lid (Vertical)	7-77
7-101	Tape Lid (Horizontal)	7-77
7-102	Tape Lid Latch Spring	7-77
7-103	Letters Operating Lever	7-78
7-104	Letters Operating Lever Vertical Extension	7-78
7-105	Letters Operating Lever Horizontal Extension	7-79
7-106	Letters Operating Lever Horizontal Extension Spring Tension	7-79
7-107	Release Bar Latch	7-80
7-108	Tape-out Contact Lever Upstop	7-80
7-109	Main Shaft	7-81
7-110	Check and Feed Pawl Spring	7-81
7-111	Tape Reel Ratchet Wheel Hub, Pivot Arm, and Latch	7-82
7-112	Tight Tape Arm and Stop Pawl Spring Tensions	7-83
7-113	Rewind Reel Slack Arm Spring Tension	7-83
7-114	Relay Contact Numbering and Winding Locations	7-85
7-115	Parts of Relays	7-85
7-116	Relay Contact Conditions	7-86
7-117	Relay Heelpiece Air Gap	7-87
7-118	Relay Spring Gauging	7-87
7-119	Relay Spring Adjustment	7-88
7-120	Relay Contact Alignment	7-89
7-121	Relay Armature Clearance	7-89
7-122	Relay Armature Adjustments	7-94
7-123	Single Coil Fast Acting Relay (Class S)	7-96
7-124	Class S Relay Armature Adjustments	7-96
7-125	Class S Relay Armature Travel	7-97
7-126	Parts of Relays K-105 and K-206	7-99
7-127	Relay Adjusting Key	7-100
7-128	Bias Spring Clearance Adjustment	7-100
7-129	Pole Piece and Contact Screw Adjustment	7-101
7-130	Alignment of New Governor Contact Points	7-102
7-131	Enlarged Diagrams of Governor Contact Surfaces	7-103
7-132	Positioning Governor Contacts	7-103
7-133	Control Panel SB-357/FGC, Front View	7-113
7-134	Control Panel SB-357/FGC, Rear View	7-114
7-135	Control Panel SB-358/FGC, Front View	7-115
7-136	Control Panel SB-358/FGC, Rear View	7-116

LIST OF ILLUSTRATIONS—(Cont'd)

Figure	Title	Page
7–137	Control Panel SB-358/FGC, Control Box Removed	7–117
7–138	Monitor Cabinet Parts	7–118
7–139	Monitor Cabinet Parts	7–119
7–140	Monitor Reperforator Tape Container	7–120
7–141	Reeling Machine RL-173/FGC, Motor Bracket Assembly	7–121
7–142	Reeling Machine RL-173/FGC, Base Assembly	7–122
7–143	Reeling Machine RL-173/FGC, Driven Shaft Assembly	7–123
7–144	Reeling Machine RL-173/FGC, Intermediate Gear and Clutch Assembly	7–124
7–145	Reeling Machine RL-173/FGC, Tape Reel Assembly	7–125
7–146	Power Supply PP-987/U, Front View	7–126
7–147	Power Supply PP-987/U, Rear View	7–127
7–148	Power Supply PP-987/U, Bottom View	7–128
7–149	Governed Motor	7–129
7–150	Governor Parts	7–130
7–151	Motor Resistor and Filter Assemblies	7–131
7–152	Resistor Assembly for MT-1370/FGC-38X and MT-1373/FGC-38X	7–132
7–153	Synchronous Motor	7–133
7–154	Synchronous Motor Filter Assembly	7–134
7–155	Reperforator Base Plate Assembly	7–135
7–156	Type Bar Basket Assembly	7–136
7–157	Type Bars and Springs	7–137
7–158	Code Bars and Main Bail Assembly	7–138
7–159	Main Bail Basket Assembly	7–139
7–160	Ribbon Feed Mechanism	7–140
7–161	Main Shaft Bracket Assembly	7–141
7–162	Main Shaft Assembly	7–142
7–163	Punch Block Assembly	7–143
7–164	Punch Arm Assembly	7–144
7–165	Vertical Link Basket Assembly	7–145
7–166	Selector Mechanism and Range Scale Assembly	7–146
7–167	Selector Assembly	7–147
7–168	Tape Feed-out Base Plate and Clutch Shaft	7–148
7–169	Tape Feed-out Magnets and Worm Follower Assembly	7–149
7–170	Distributor-Transmitter Base Assembly	7–150
7–171	Distributor-Transmitter Clutch and Camshaft Assemblies	7–151
7–172	Distributor-Transmitter Selector Mechanism	7–152
7–173	Distributor-Transmitter Top Plate and Side Post Assemblies	7–153
7–174	Numbering Base Casting Assembly	7–154
7–175	Numbering Base Take-up Reel Assembly	7–155
7–176	Numbering Base Take-up Reels and Drive Shaft Assembly	7–156
7–177	Numbering Base Covers	7–157
7–178	Numbering Base Rewind Reel Assembly	7–158
7–179	Base, Bottom View	7–159
7–180	Message Base Casting, Top	7–160
7–181	Message Base, Drive Shaft and Cover Assemblies	7–161
7–182	Message Base Covers	7–162
7–183	Time Stamp Cover and Right Side Frame	7–163
7–184	Time Stamp, Left Side Frame	7–164
7–185	Time Stamp, Typewheels	7–165
7–186	Time Stamp, Lower Base	7–166
7–187	Receiver Cabinet, Parts	7–167
7–188	Receiver Cabinet, Parts	7–168
7–189	Receiver Cabinet, Parts	7–169
7–190	Receiver Reperforator Tape Container	7–170
7–191	Transmitter Cabinet, Parts	7–171
7–192	Transmitter Cabinet, Parts	7–172
7–193	Reperforator Tape Feed-out Mechanism	7–173
7–194	Receiver Cabinet CY-1523/FGC, Wiring Diagram	7–175
7–195	Receiver Cabinet CY-1523/FGC, Wiring Diagram	7–177
7–196	Transmitter Cabinet CY-1524/FGC, Wiring Diagram	7–179
7–197	Monitor Cabinet CY-1522/FGC, Wiring Diagram	7–181
7–198	Control Panel SB-357/FGC, Wiring Diagram	7–183
7–199	Control Panel SB-358/FGC, Wiring Diagram	7–185
7–200	Power Supply PP-987/U, Wiring Diagram	7–187
7–201	Reeling Machine RL-173/FGC, Wiring Diagram	7–189

LIST OF ILLUSTRATIONS—(Cont'd)

Table	Title	Page
7–202	Time Stamp MX-1257/U, Wiring Diagram	7–191
7–203	Distributor Transmitter TT-169/FGC-38 and TT-170/FGC-39, Wiring Diagram	7–193
7–204	Distributor-Transmitter TT-167/FGC-38 and TT-168/FGC-39, Wiring Diagram	7–195
7–205	Receiver Reperforator TT-161/FGC-38, TT-162/FGC-38X, and TT-163/FGC-39, Wiring Diagram	7–197
7–206	Monitor Reperforator, Wiring Diagram	7–199
7–207	Distributor-Transmitter Base MT-1372/FGC-38, MT-1373/FGC-38X, and MT-1374/FGC-39, Wiring Diagram	7–201
7–208	Distributor-Transmitter Base MT-1369/FGC-38, MT-1370/FGC-38X, and MT-1371/FGC-39, Wiring Diagram	7–203
7–209	Receiver Group, Schematic Diagram	7–205
7–210	Transmitter Group, Schematic Diagram	7–207
7–211	Monitor Group, Schematic Diagram	7–209
7–212	Interconnecting Diagram	7–211

LIST OF TABLES

Table	Title	Page
7–1	System Trouble Shooting Chart	7–1
7–2	Receiver Group Trouble Shooting Chart	7–2
7–3	Transmitter Group Trouble Shooting Chart	7–3
7–4	Monitor Group Trouble Shooting Chart	7–4
7–5	D-C Power Supply Trouble Shooting Chart	7–5
7–6	Control Panel SB-357/FGC Trouble Shooting Chart	7–6
7–7	Control Panel SB-358/FGC Trouble Shooting Chart	7–7
7–8	Reeling Machine Trouble Shooting Chart	7–8
7–9	Governed Motor Trouble Shooting Chart	7–8
7–10	Reperforator Trouble Shooting Chart	7–9
7–11	Time Stamp Trouble Shooting Chart	7–11
7–12	Distributor-Transmitter Base Trouble Shooting Chart	7–12
7–13	Distributor-Transmitter Trouble Shooting Chart	7–13
7–14	Control Panel SB-357/FGC Voltage Chart	7–14
7–15	Control Panel SB-357/FGC Resistance Chart (K-106 Removed)	7–14
7–16	Control Panel SB-358/FGC Voltage Chart	7–14
7–17	Control Panel SB-358/FGC Resistance Chart (K-201 Removed)	7–15
7–18	Power Supply PP-987/U Voltage Chart	7–15
7–19	Power Supply Dummy Loads	7–15
7–20	Power Supply Adjustment Data	7–16
7–21	Tools and Test Equipment Suggested for Relay Testing and Adjusting	7–88
7–22	Relay Adjustment Values, Receiver	7–90
7–23	Relay Adjustment Values, Transmitter	7–21, 7–93
7–24	Class S Relay Adjustment Values	7–98
7–25	Winding Data	7–112

FAILURE REPORTS

A FAILURE REPORT must be filled out for the failure of any part of the equipment whether caused by defective or worn parts, improper operation, or external influences. It should be made on Failure Report, form NBS-383, which has been designed to simplify this requirement. The card must be filled out and forwarded to BUSHIPS in the franked envelope which is provided. Full instructions are to be found on each card.

Use great care in filling the card out to make certain it carries adequate information. For example, under "Circuit Symbol" use the proper circuit identification taken from the schematic drawings, such as T-803, in the case of a transformer, or R-207, for a resistor. Do not substitute brevity for clarity. Use the back of the card to completely describe the cause of failure and attach an extra piece of paper if necessary.

The purpose of this report is to inform BUSHIPS of the cause and rate of failures. The information is used by the Bureau in the design of future equipment and in the maintenance of adequate supplies to keep the present equipment going. The cards you send in, together with those from hundreds of other ships, furnish a store of information permitting the Bureau to keep in touch with the performance of the equipment of your ship and all other ships of the Navy.

This report is not a requisition. You must request the replacement of parts through your Officer-in-Charge in the usual manner.

Make certain you have a supply of Failure Report cards and envelopes on board. They may be obtained from any Electronics Officer.

SECTION 7
CORRECTIVE MAINTENANCE

1. THEORY OF LOCALIZATION.

a. The information contained in this section is planned to provide maintenance personnel with efficient means for locating and clearing trouble. An understanding of how the various mechanisms and circuits function will assist greatly in determining when the equipment is operating correctly, when it requires repairs, and, when repairs are required, whether it will be more practical to replace the part or to make the repair. Section 2 includes an explanation of purpose and operation of the various components and circuits.

b. The system of symbol designation is outlined below so a particular piece may be associated with the proper group immediately.

Unit	Numerical Range
Control Panel SB-357/FGC	100-199
Control Panel SB-358/FGC	200-299
Electrical Equipment Cabinet CY-1522/FGC	300-399
Reeling Machine RL-173/FGC-6	400-499
Power Supply PP-987/U	500-599
Governed Motor	600-699
Synchronous Motor	700-799
Teletypewriter Reperforator TT-161/FGC-38	800-1299
TT-162/FGC-38X, TT-163/FGC-39	2100-2199
TT-164/FGC-38, TT-165/FGC-38X, or TT-166/FGC-39	
Distributor-Transmitter TT-167/FGC-38, TT-168/FGC-39, TT-169/FGC-38, or TT-170/FGC-39	1300-1499
Distributor-Transmitter Base MT-1372/FGC-38, MT-1373/FGC-38X, or MT-1374/FGC-39	1500-1699
Distributor-Transmitter Base MT-1369/FGC-38, MT-1370/FGC-38X, or MT-1371/FGC-39	1700-1799
Time Stamp MX-1527/U	1800-1899
Electrical Equipment Cabinet CY-1523/FGC	1900-1999
Electrical Equipment Cabinet CY-1524/FGC	2000-2099

c. Localization of trouble in a set is the tracing of faults to a particular unit or component within the set. Localization can be done by sight and sound, such as arcing or inoperative relays, and by smell, such as overheated resistors, coils, and rectifiers. Trouble is indicated by alarm systems or alarm lamps on the units. An open line condition is indicated by the lighting of an OPEN LINE alarm lamp.

Visual inspection will often locate the difficulty immediately. Check all plugs for proper mating with their jacks or receptacles, relays for proper seating in their connectors, and transmitter control panels for proper installation in their racks.

2. SYSTEM TROUBLE SHOOTING.

The following tables are arranged to help in locating the probable faulty component. Table 7-1 is the trouble-shooting chart covering the entire equipment and tables 7-2 to 7-4 inclusive cover the receiver, transmitter, and monitor groups separately.

TABLE 7-1. SYSTEM TROUBLE SHOOTING CHART

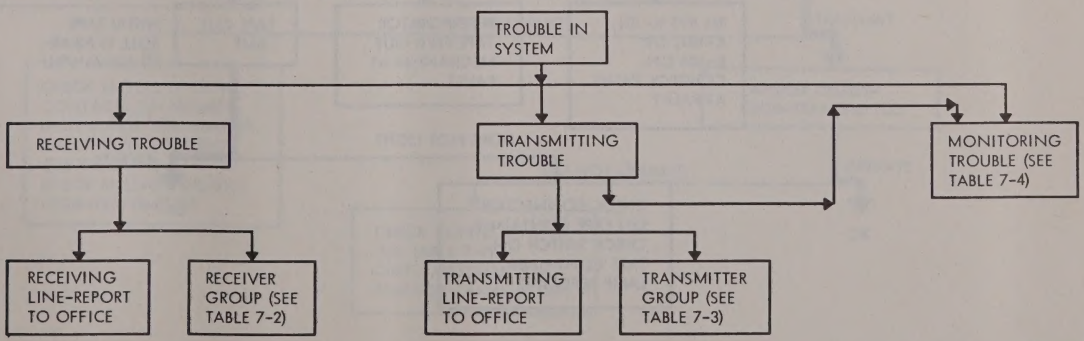

TABLE 7-2. RECEIVER GROUP TROUBLE SHOOTING CHART

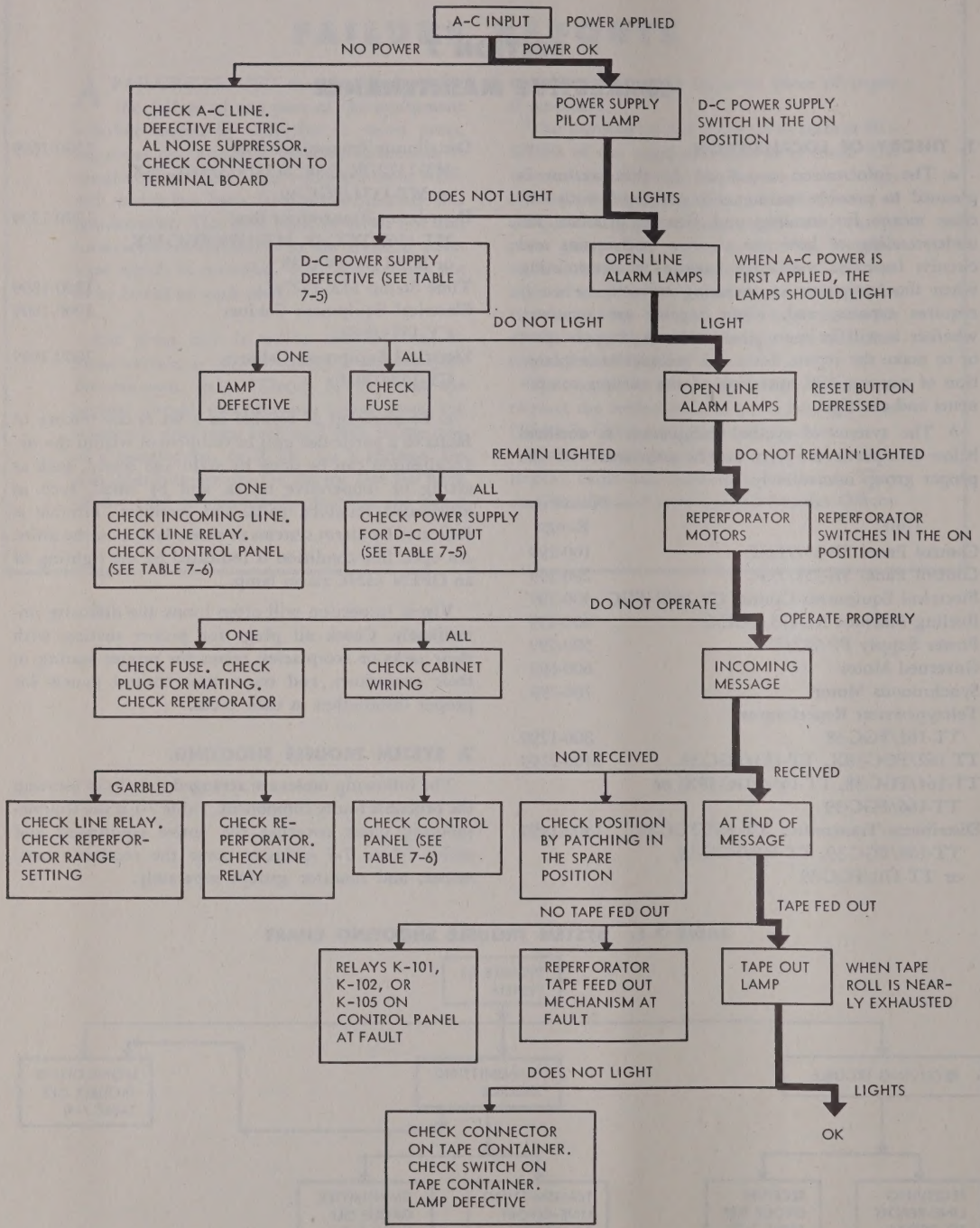
A-C INPUT
POWER APPLIED
NO POWER
POWER OK
CHECK A-C LINE. DEFECTIVE ELECTRIC-AL NOISE SUPPRESSOR. CHECK CONNECTION TO TERMINAL BOARD
POWER SUPPLY PILOT LAMP
D-C POWER SUPPLY SWITCH IN THE ON POSITION
DOES NOT LIGHT
LIGHTS
D-C POWER SUPPLY DEFECTIVE (SEE TABLE 7-5)
OPEN LINE ALARM LAMPS
WHEN A-C POWER IS FIRST APPLIED, THE LAMPS SHOULD LIGHT
DO NOT LIGHT
LIGHT
ONE
ALL
LAMP DEFECTIVE
CHECK FUSE
OPEN LINE ALARM LAMPS
RESET BUTTON DEPRESSED
REMAIN LIGHTED
DO NOT REMAIN LIGHTED
ONE
ALL
CHECK INCOMING LINE. CHECK LINE RELAY. CHECK CONTROL PANEL (SEE TABLE 7-6)
CHECK POWER SUPPLY FOR D-C OUTPUT (SEE TABLE 7-5)
REPERFORATOR MOTORS
REPERFORATOR SWITCHES IN THE ON POSITION
DO NOT OPERATE
OPERATE PROPERLY
ONE
ALL
CHECK FUSE. CHECK PLUG FOR MATING. CHECK REPERFORATOR
CHECK CABINET WIRING
INCOMING MESSAGE
NOT RECEIVED
RECEIVED
GARBLED
CHECK LINE RELAY. CHECK REPERFOR-ATOR RANGE SETTING
CHECK RE-PERFORATOR. CHECK LINE RELAY
CHECK CONTROL PANEL (SEE TABLE 7-6)
CHECK POSITION BY PATCHING IN THE SPARE POSITION
AT END OF MESSAGE
NO TAPE FED OUT
TAPE FED OUT
RELAYS K-101, K-102, OR K-105 ON CONTROL PANEL AT FAULT
REPERFORATOR TAPE FEED OUT MECHANISM AT FAULT
TAPE OUT LAMP
WHEN TAPE ROLL IS NEAR-LY EXHAUSTED
DOES NOT LIGHT
LIGHTS
OK
CHECK CONNECTOR ON TAPE CONTAINER. CHECK SWITCH ON TAPE CONTAINER. LAMP DEFECTIVE

TABLE 7-3. TRANSMITTER GROUP TROUBLE SHOOTING CHART

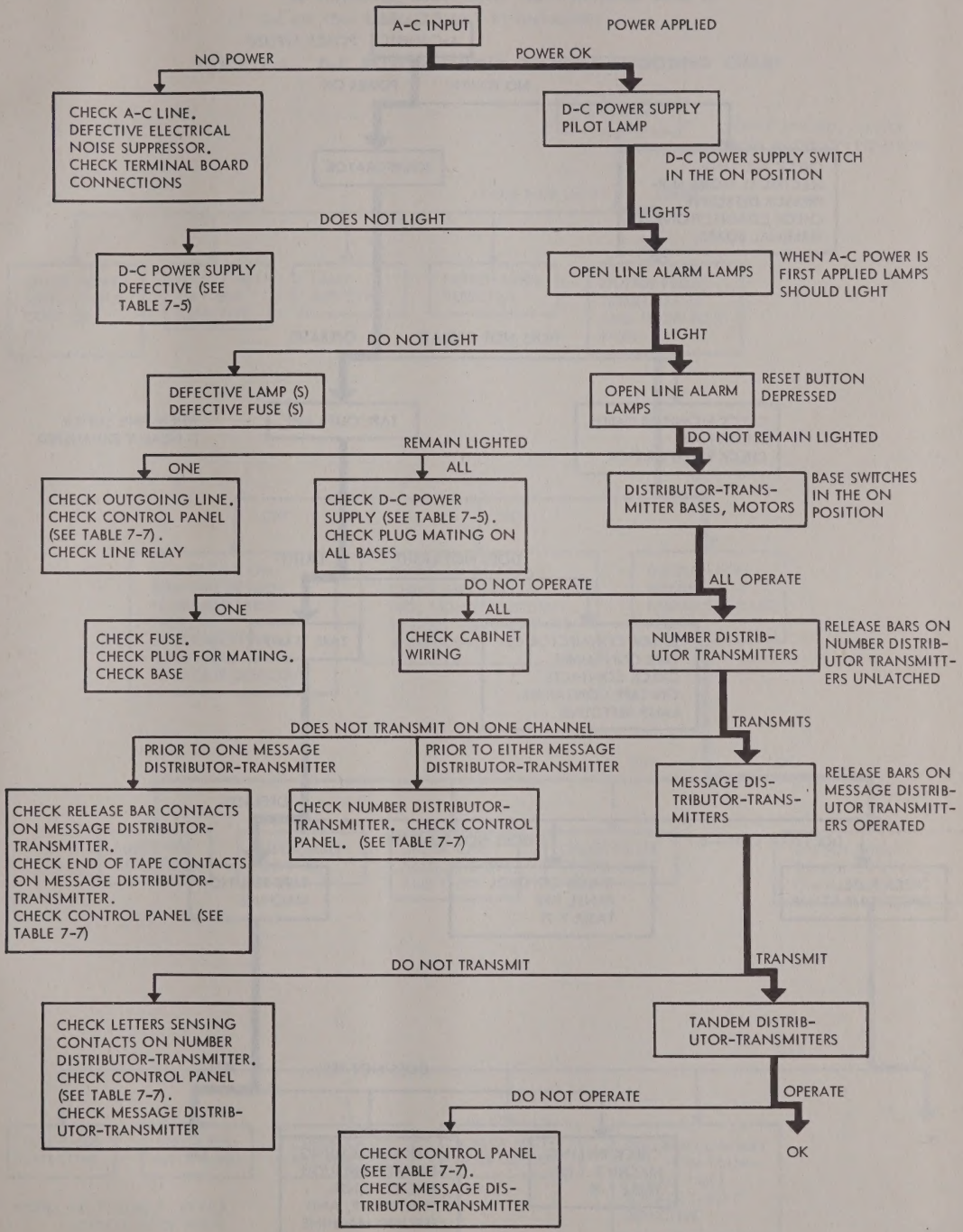
A-C INPUT
POWER APPLIED
NO POWER
POWER OK
CHECK A-C LINE. DEFECTIVE ELECTRICAL NOISE SUPPRESSOR. CHECK TERMINAL BOARD CONNECTIONS
D-C POWER SUPPLY PILOT LAMP
D-C POWER SUPPLY SWITCH IN THE ON POSITION
DOES NOT LIGHT
LIGHTS
D-C POWER SUPPLY DEFECTIVE (SEE TABLE 7-5)
OPEN LINE ALARM LAMPS
WHEN A-C POWER IS FIRST APPLIED LAMPS SHOULD LIGHT
DO NOT LIGHT
LIGHT
DEFECTIVE LAMP (S) DEFECTIVE FUSE (S)
OPEN LINE ALARM LAMPS
RESET BUTTON DEPRESSED
REMAIN LIGHTED
DO NOT REMAIN LIGHTED
ONE
ALL
CHECK OUTGOING LINE. CHECK CONTROL PANEL (SEE TABLE 7-7). CHECK LINE RELAY
CHECK D-C POWER SUPPLY (SEE TABLE 7-5). CHECK PLUG MATING ON ALL BASES
DISTRIBUTOR-TRANSMITTER BASES, MOTORS
BASE SWITCHES IN THE ON POSITION
DO NOT OPERATE
ALL OPERATE
ONE
ALL
CHECK FUSE. CHECK PLUG FOR MATING. CHECK BASE
CHECK CABINET WIRING
NUMBER DISTRIBUTOR TRANSMITTERS
RELEASE BARS ON NUMBER DISTRIBUTOR TRANSMITTERS UNLATCHED
DOES NOT TRANSMIT ON ONE CHANNEL
TRANSMITS
PRIOR TO ONE MESSAGE DISTRIBUTOR-TRANSMITTER
PRIOR TO EITHER MESSAGE DISTRIBUTOR-TRANSMITTER
MESSAGE DISTRIBUTOR-TRANSMITTERS
RELEASE BARS ON MESSAGE DISTRIBUTOR TRANSMITTERS OPERATED
CHECK RELEASE BAR CONTACTS ON MESSAGE DISTRIBUTOR-TRANSMITTER. CHECK END OF TAPE CONTACTS ON MESSAGE DISTRIBUTOR-TRANSMITTER. CHECK CONTROL PANEL (SEE TABLE 7-7)
CHECK NUMBER DISTRIBUTOR-TRANSMITTER. CHECK CONTROL PANEL. (SEE TABLE 7-7)
DO NOT TRANSMIT
TRANSMIT
CHECK LETTERS SENSING CONTACTS ON NUMBER DISTRIBUTOR-TRANSMITTER. CHECK CONTROL PANEL (SEE TABLE 7-7). CHECK MESSAGE DISTRIBUTOR-TRANSMITTER
TANDEM DISTRIBUTOR-TRANSMITTERS
DO NOT OPERATE
OPERATE
OK
CHECK CONTROL PANEL (SEE TABLE 7-7). CHECK MESSAGE DISTRIBUTOR-TRANSMITTER

TABLE 7-4. MONITOR GROUP TROUBLE SHOOTING CHART

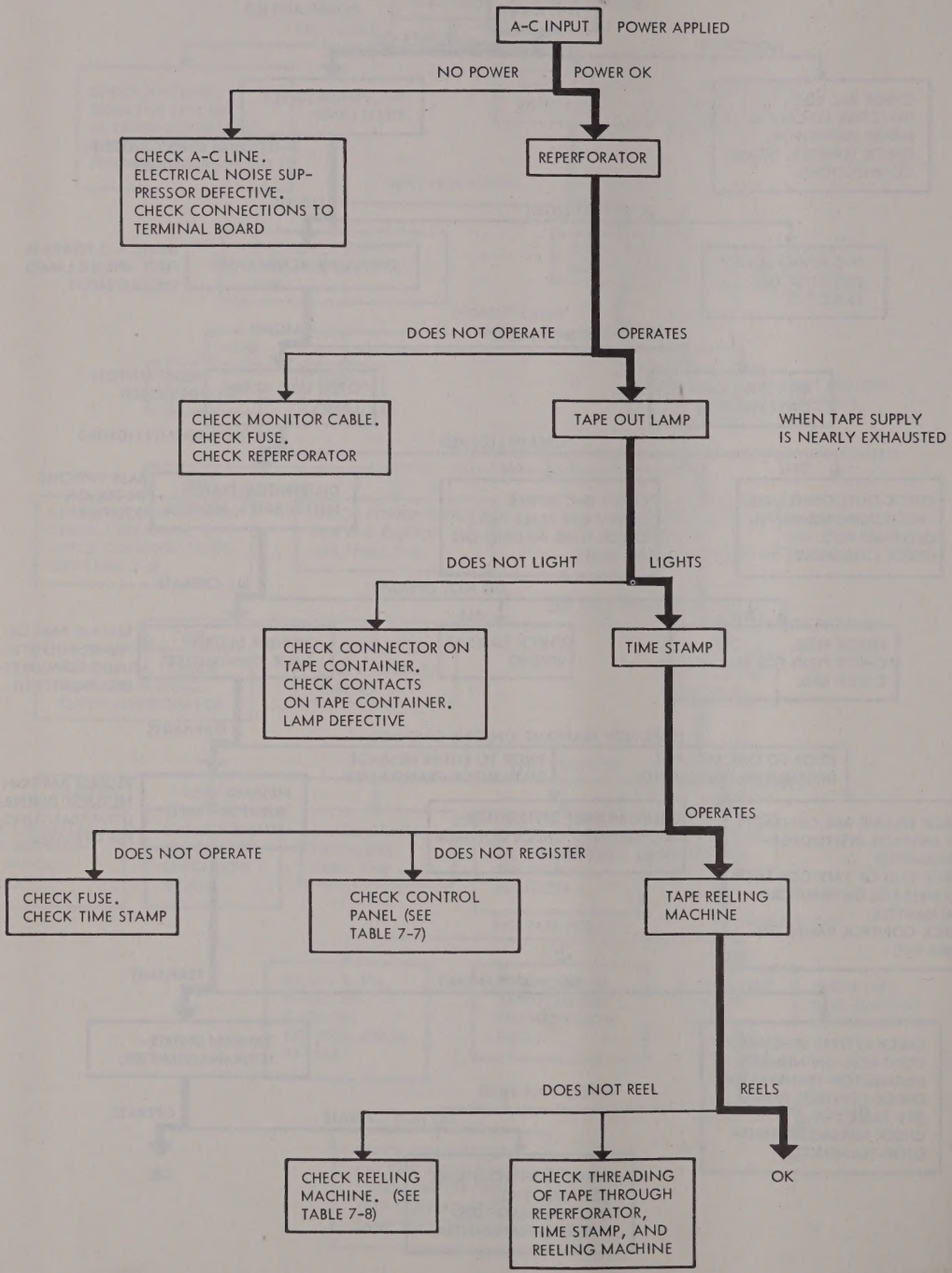

3. UNIT TROUBLE SHOOTING.

The following tables cover the individual units in the set. (See tables 7-5 to 7-13 inclusive.)

TABLE 7-5. D-C POWER SUPPLY TROUBLE SHOOTING CHART

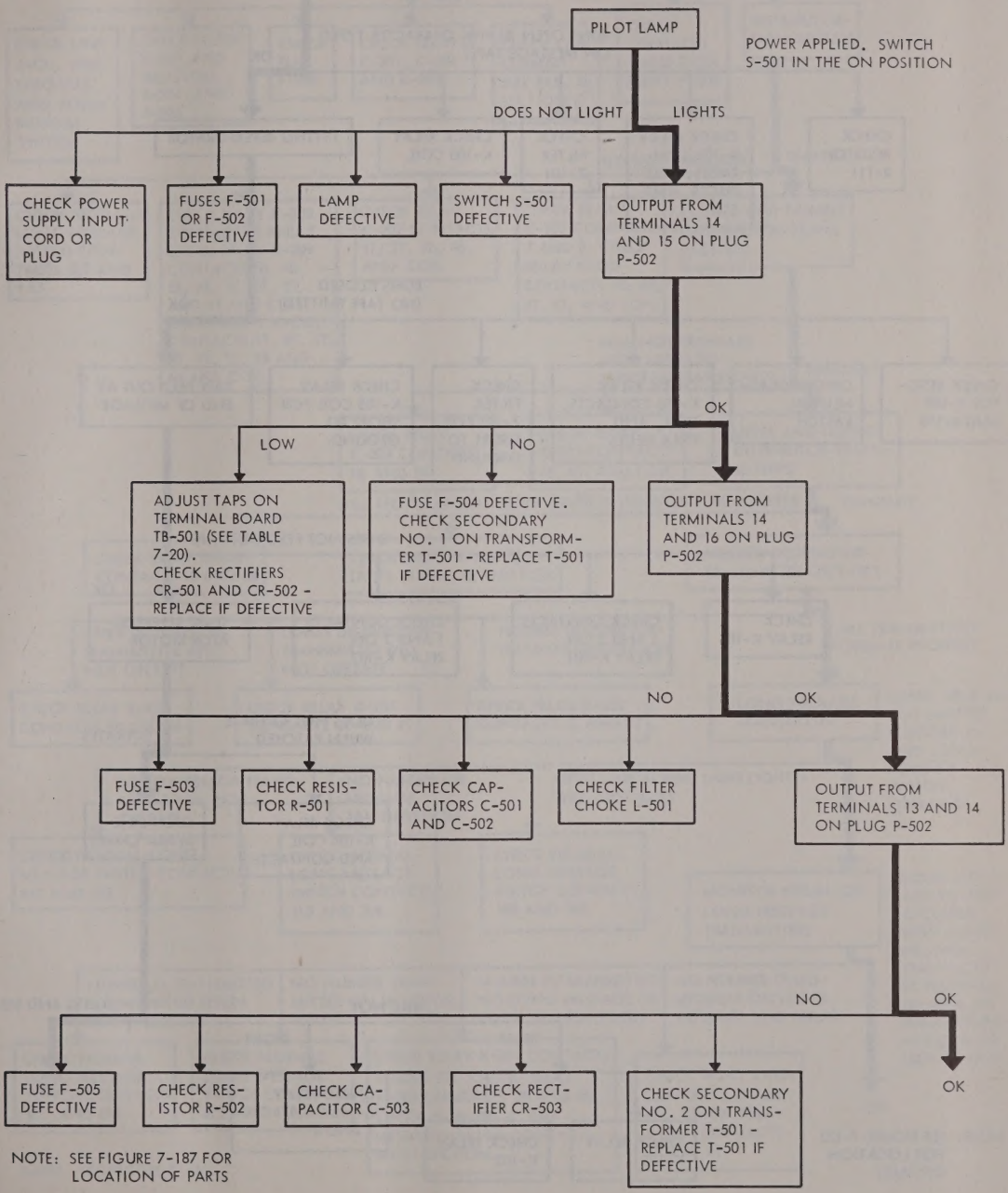
PILOT LAMP
POWER APPLIED. SWITCH S-501 IN THE ON POSITION
DOES NOT LIGHT
LIGHTS
CHECK POWER SUPPLY INPUT CORD OR PLUG
FUSES F-501 OR F-502 DEFECTIVE
LAMP DEFECTIVE
SWITCH S-501 DEFECTIVE
OUTPUT FROM TERMINALS 14 AND 15 ON PLUG P-502
OK
LOW
NO
ADJUST TAPS ON TERMINAL BOARD TB-501 (SEE TABLE 7-20). CHECK RECTIFIERS CR-501 AND CR-502 - REPLACE IF DEFECTIVE
FUSE F-504 DEFECTIVE. CHECK SECONDARY NO. 1 ON TRANSFORMER T-501 - REPLACE T-501 IF DEFECTIVE
OUTPUT FROM TERMINALS 14 AND 16 ON PLUG P-502
NO
OK
FUSE F-503 DEFECTIVE
CHECK RESISTOR R-501
CHECK CAPACITORS C-501 AND C-502
CHECK FILTER CHOKE L-501
OUTPUT FROM TERMINALS 13 AND 14 ON PLUG P-502
NO
OK
OK
FUSE F-505 DEFECTIVE
CHECK RESISTOR R-502
CHECK CAPACITOR C-503
CHECK RECTIFIER CR-503
CHECK SECONDARY NO. 2 ON TRANSFORMER T-501 - REPLACE T-501 IF DEFECTIVE

NOTE: SEE FIGURE 7-187 FOR LOCATION OF PARTS

TABLE 7-6. CONTROL PANEL SB-357/FGC TROUBLE SHOOTING CHART

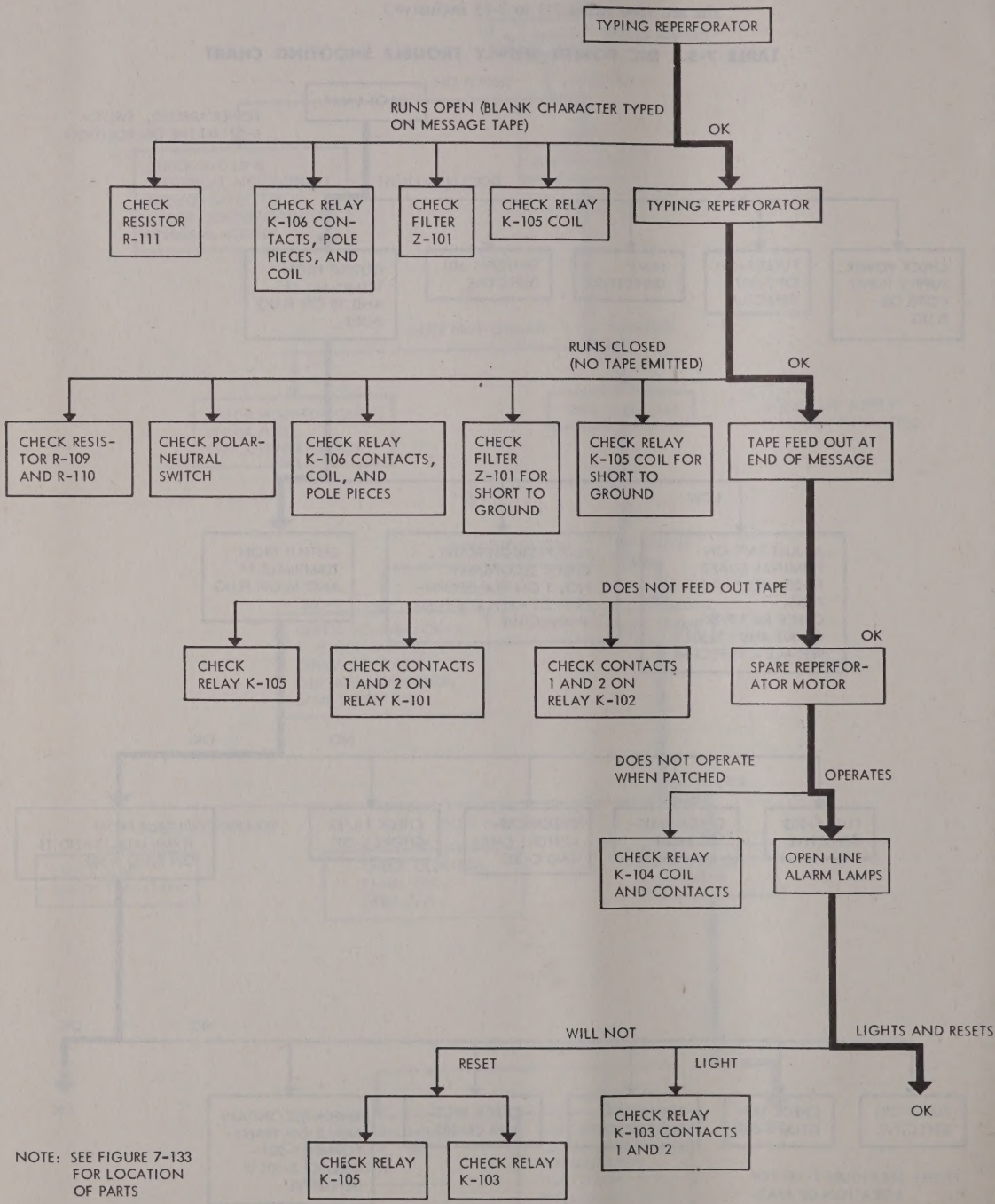
TYPING REPERFORATOR
RUNS OPEN (BLANK CHARACTER TYPED ON MESSAGE TAPE)
OK
CHECK RESISTOR R-111
CHECK RELAY K-106 CONTACTS, POLE PIECES, AND COIL
CHECK FILTER Z-101
CHECK RELAY K-105 COIL
TYPING REPERFORATOR
RUNS CLOSED (NO TAPE EMITTED)
OK
CHECK RESISTOR R-109 AND R-110
CHECK POLAR-NEUTRAL SWITCH
CHECK RELAY K-106 CONTACTS, COIL, AND POLE PIECES
CHECK FILTER Z-101 FOR SHORT TO GROUND
CHECK RELAY K-105 COIL FOR SHORT TO GROUND
TAPE FEED OUT AT END OF MESSAGE
DOES NOT FEED OUT TAPE
OK
CHECK RELAY K-105
CHECK CONTACTS 1 AND 2 ON RELAY K-101
CHECK CONTACTS 1 AND 2 ON RELAY K-102
SPARE REPERFORATOR MOTOR
DOES NOT OPERATE WHEN PATCHED
OPERATES
CHECK RELAY K-104 COIL AND CONTACTS
OPEN LINE ALARM LAMPS
WILL NOT
LIGHTS AND RESETS
RESET
LIGHT
OK
CHECK RELAY K-105
CHECK RELAY K-103
CHECK RELAY K-103 CONTACTS 1 AND 2

NOTE: SEE FIGURE 7-133 FOR LOCATION OF PARTS

TABLE 7-7. CONTROL PANEL SB-358/FGC TROUBLE SHOOTING CHART

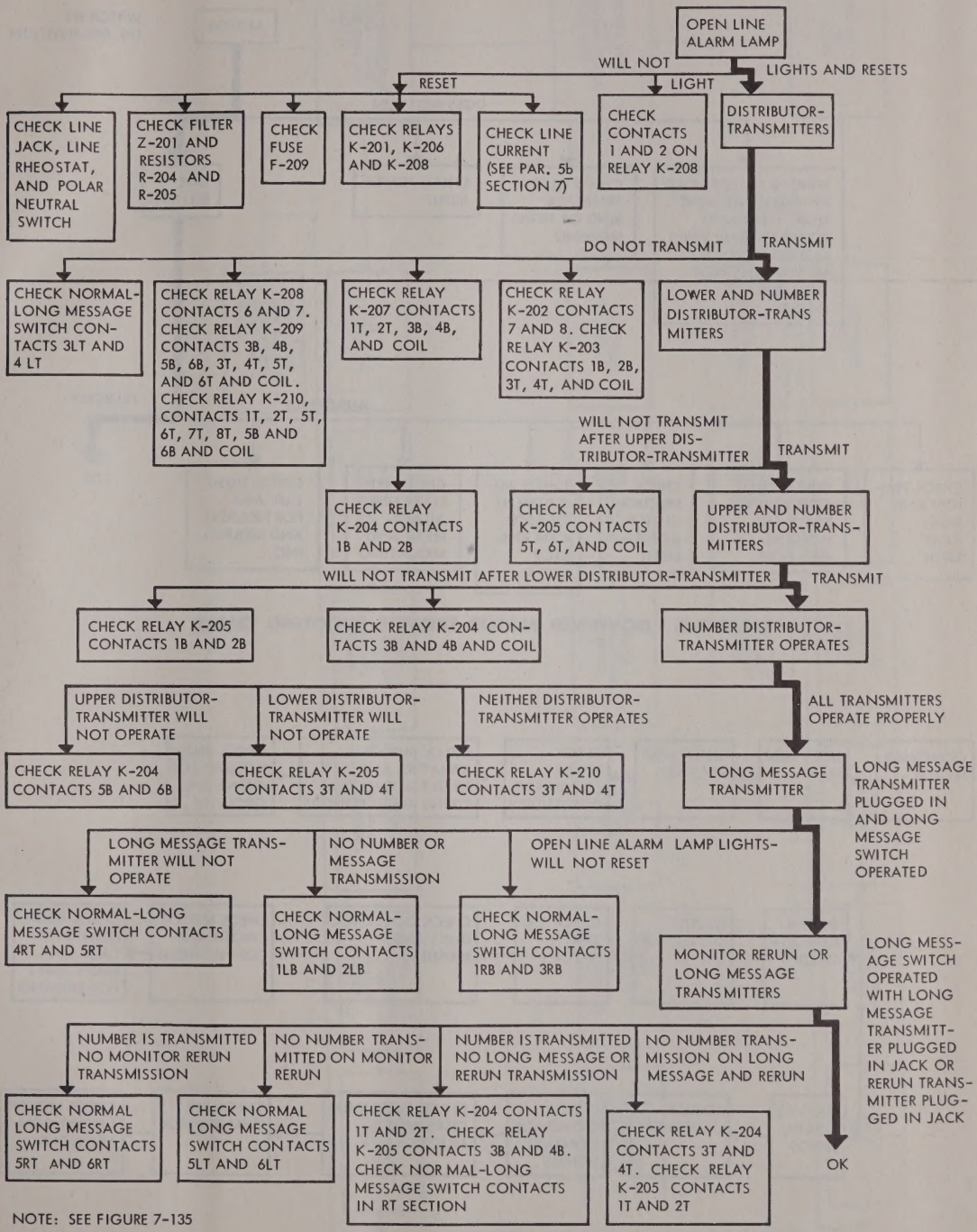
OPEN LINE ALARM LAMP
WILL NOT RESET
LIGHTS AND RESETS
LIGHT
CHECK LINE JACK, LINE RHEOSTAT, AND POLAR NEUTRAL SWITCH
CHECK FILTER Z-201 AND RESISTORS R-204 AND R-205
CHECK FUSE F-209
CHECK RELAYS K-201, K-206 AND K-208
CHECK LINE CURRENT (SEE PAR. 5b SECTION 7)
CHECK CONTACTS 1 AND 2 ON RELAY K-208
DISTRIBUTOR-TRANSMITTERS
DO NOT TRANSMIT
TRANSMIT
CHECK NORMAL-LONG MESSAGE SWITCH CONTACTS 3LT AND 4 LT
CHECK RELAY K-208 CONTACTS 6 AND 7. CHECK RELAY K-209 CONTACTS 3B, 4B, 5B, 6B, 3T, 4T, 5T, AND 6T AND COIL. CHECK RELAY K-210, CONTACTS 1T, 2T, 5T, 6T, 7T, 8T, 5B AND 6B AND COIL
CHECK RELAY K-207 CONTACTS 1T, 2T, 3B, 4B, AND COIL
CHECK RELAY K-202 CONTACTS 7 AND 8. CHECK RELAY K-203 CONTACTS 1B, 2B, 3T, 4T, AND COIL
LOWER AND NUMBER DISTRIBUTOR-TRANSMITTERS
WILL NOT TRANSMIT AFTER UPPER DISTRIBUTOR-TRANSMITTER
TRANSMIT
CHECK RELAY K-204 CONTACTS 1B AND 2B
CHECK RELAY K-205 CONTACTS 5T, 6T, AND COIL
UPPER AND NUMBER DISTRIBUTOR-TRANSMITTERS
WILL NOT TRANSMIT AFTER LOWER DISTRIBUTOR-TRANSMITTER
TRANSMIT
CHECK RELAY K-205 CONTACTS 1B AND 2B
CHECK RELAY K-204 CONTACTS 3B AND 4B AND COIL
NUMBER DISTRIBUTOR-TRANSMITTER OPERATES
UPPER DISTRIBUTOR-TRANSMITTER WILL NOT OPERATE
LOWER DISTRIBUTOR-TRANSMITTER WILL NOT OPERATE
NEITHER DISTRIBUTOR-TRANSMITTER OPERATES
ALL TRANSMITTERS OPERATE PROPERLY
CHECK RELAY K-204 CONTACTS 5B AND 6B
CHECK RELAY K-205 CONTACTS 3T AND 4T
CHECK RELAY K-210 CONTACTS 3T AND 4T
LONG MESSAGE TRANSMITTER
LONG MESSAGE TRANSMITTER PLUGGED IN AND LONG MESSAGE SWITCH OPERATED
LONG MESSAGE TRANSMITTER WILL NOT OPERATE
NO NUMBER OR MESSAGE TRANSMISSION
OPEN LINE ALARM LAMP LIGHTS-WILL NOT RESET
CHECK NORMAL-LONG MESSAGE SWITCH CONTACTS 4RT AND 5RT
CHECK NORMAL-LONG MESSAGE SWITCH CONTACTS 1LB AND 2LB
CHECK NORMAL-LONG MESSAGE SWITCH CONTACTS 1RB AND 3RB
MONITOR RERUN OR LONG MESSAGE TRANSMITTERS
LONG MESSAGE SWITCH OPERATED WITH LONG MESSAGE TRANSMITTER PLUGGED IN JACK OR RERUN TRANSMITTER PLUGGED IN JACK
NUMBER IS TRANSMITTED NO MONITOR RERUN TRANSMISSION
NO NUMBER TRANSMITTED ON MONITOR RERUN
NUMBER IS TRANSMITTED NO LONG MESSAGE OR RERUN TRANSMISSION
NO NUMBER TRANSMISSION ON LONG MESSAGE AND RERUN
OK
CHECK NORMAL LONG MESSAGE SWITCH CONTACTS 5RT AND 6RT
CHECK NORMAL LONG MESSAGE SWITCH CONTACTS 5LT AND 6LT
CHECK RELAY K-204 CONTACTS 1T AND 2T. CHECK RELAY K-205 CONTACTS 3B AND 4B. CHECK NORMAL-LONG MESSAGE SWITCH CONTACTS IN RT SECTION
CHECK RELAY K-204 CONTACTS 3T AND 4T. CHECK RELAY K-205 CONTACTS 1T AND 2T

NOTE: SEE FIGURE 7-135

TABLE 7-8. REELING MACHINE TROUBLE SHOOTING CHART

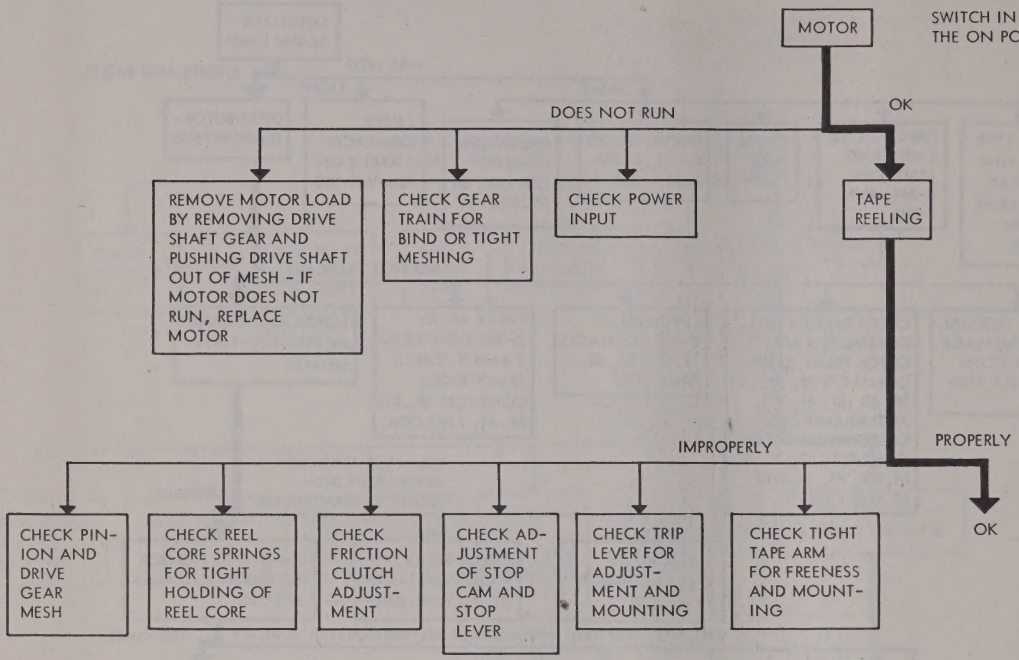
MOTOR
SWITCH IN THE ON POSITION
DOES NOT RUN
OK
REMOVE MOTOR LOAD BY REMOVING DRIVE SHAFT GEAR AND PUSHING DRIVE SHAFT OUT OF MESH - IF MOTOR DOES NOT RUN, REPLACE MOTOR
CHECK GEAR TRAIN FOR BIND OR TIGHT MESHING
CHECK POWER INPUT
TAPE REELING
IMPROPERLY
PROPERLY
OK
CHECK PINION AND DRIVE GEAR MESH
CHECK REEL CORE SPRINGS FOR TIGHT HOLDING OF REEL CORE
CHECK FRICTION CLUTCH ADJUSTMENT
CHECK ADJUSTMENT OF STOP CAM AND STOP LEVER
CHECK TRIP LEVER FOR ADJUSTMENT AND MOUNTING
CHECK TIGHT TAPE ARM FOR FREENESS AND MOUNTING

TABLE 7-9. GOVERNED MOTOR TROUBLE SHOOTING CHART

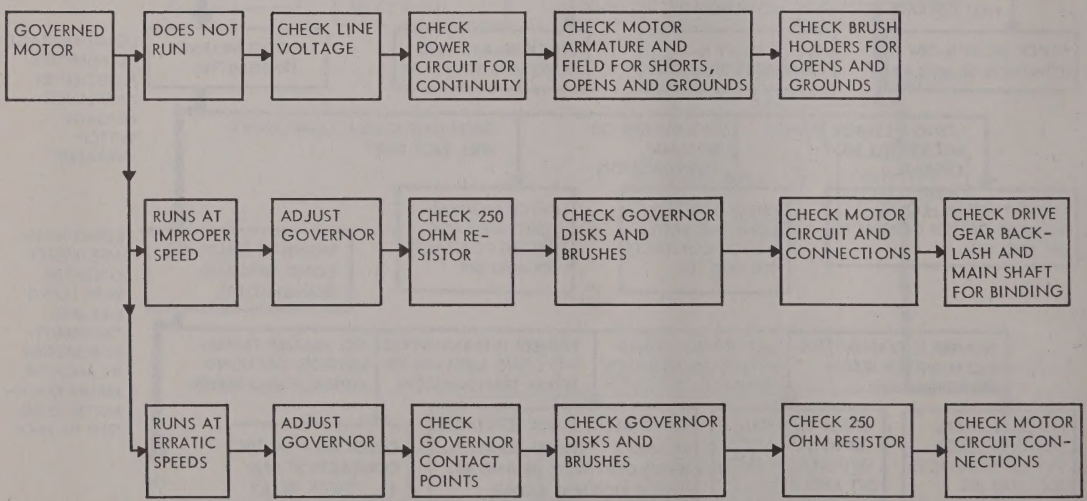
GOVERNED MOTOR
DOES NOT RUN
CHECK LINE VOLTAGE
CHECK POWER CIRCUIT FOR CONTINUITY
CHECK MOTOR ARMATURE AND FIELD FOR SHORTS, OPENS AND GROUNDS
CHECK BRUSH HOLDERS FOR OPENS AND GROUNDS
RUNS AT IMPROPER SPEED
ADJUST GOVERNOR
CHECK 250 OHM RESISTOR
CHECK GOVERNOR DISKS AND BRUSHES
CHECK MOTOR CIRCUIT AND CONNECTIONS
CHECK DRIVE GEAR BACKLASH AND MAIN SHAFT FOR BINDING
RUNS AT ERRATIC SPEEDS
ADJUST GOVERNOR
CHECK GOVERNOR CONTACT POINTS
CHECK GOVERNOR DISKS AND BRUSHES
CHECK 250 OHM RESISTOR
CHECK MOTOR CIRCUIT CONNECTIONS

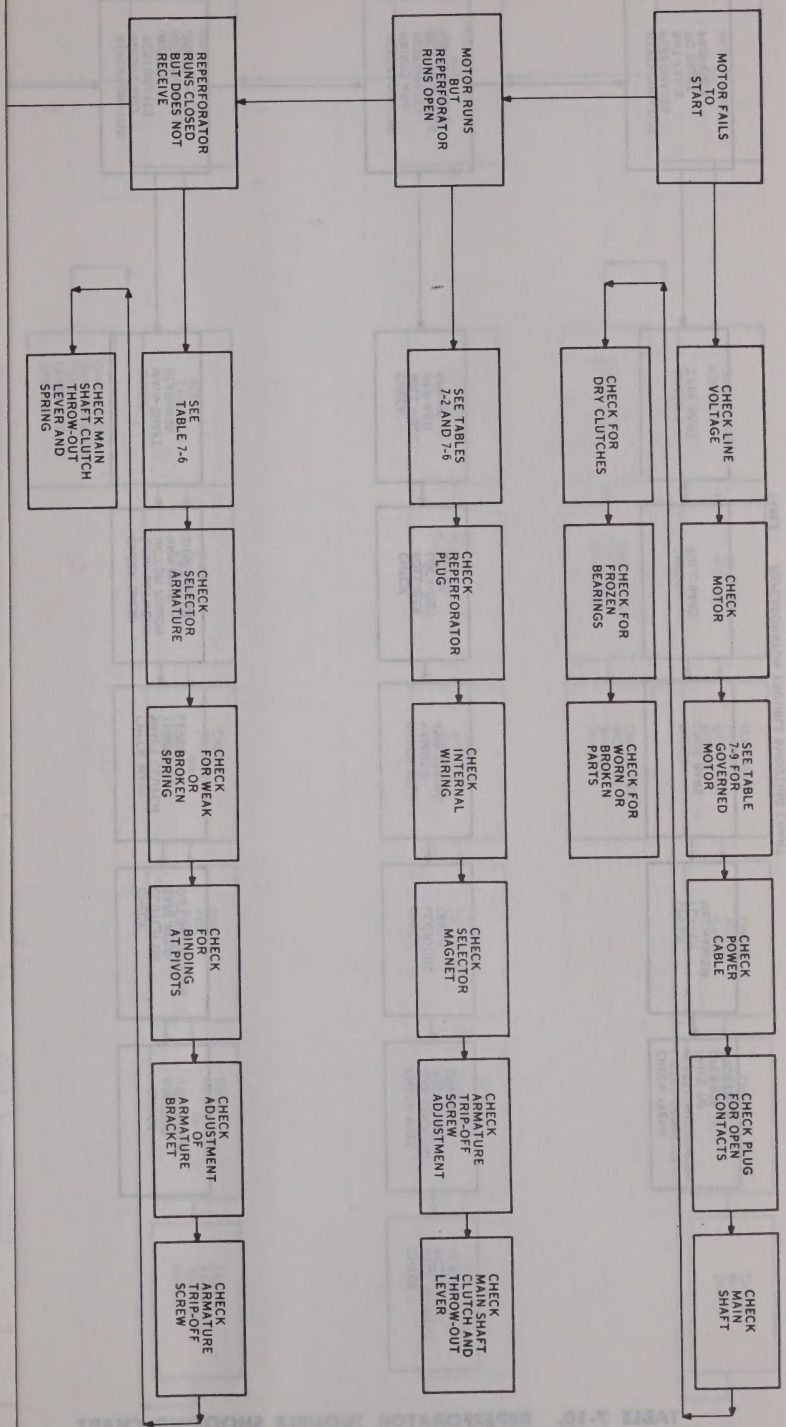
MOTOR FAILS TO START
MOTOR RUNS BUT REPERFORATOR RUNS OPEN
REPERFORATOR RUNS CLOSED BUT DOES NOT RECEIVE
CHECK LINE VOLTAGE
CHECK MOTOR
SEE TABLE 7-9 FOR GOVERNED MOTOR
CHECK POWER CABLE
CHECK PLUG FOR OPEN CONTACTS
CHECK MAIN SHAFT
CHECK FOR DRY CLUTCHES
CHECK FOR FROZEN BEARINGS
CHECK FOR WORN OR BROKEN PARTS
SEE TABLES 7-2 AND 7-6
CHECK REPERFORATOR PLUG
CHECK INTERNAL WIRING
CHECK SELECTOR MAGNET
CHECK ARMATURE TRIP-OFF SCREW ADJUSTMENT
CHECK MAIN SHAFT CLUTCH AND THROW-OUT LEVER
SEE TABLE 7-6
CHECK SELECTOR ARMATURE
CHECK FOR WEAK OR BROKEN SPRING
CHECK FOR BINDING AT PIVOTS
CHECK ADJUSTMENT OF ARMATURE BRACKET
CHECK ARMATURE TRIP-OFF SCREW
CHECK MAIN SHAFT CLUTCH THROW-OUT LEVER AND SPRING

TABLE 7-10. REPERFORATOR TROUBLE SHOOTING CHART

TABLE 7-8. REELING MACHINE TROUBLE SHOOTING CHART

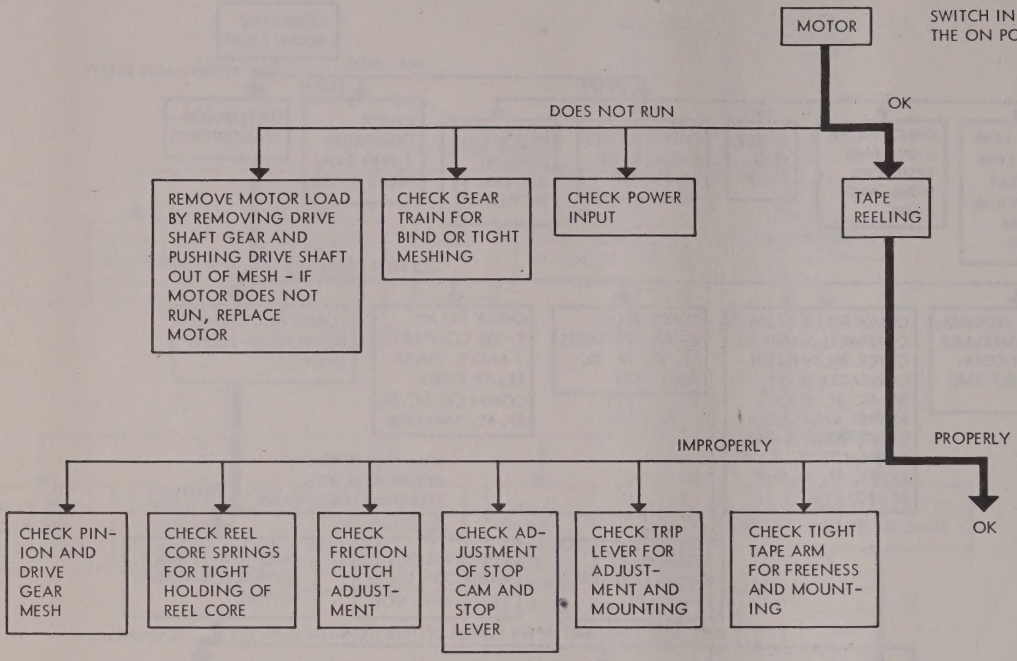
MOTOR
SWITCH IN THE ON POSITION
DOES NOT RUN
OK
REMOVE MOTOR LOAD BY REMOVING DRIVE SHAFT GEAR AND PUSHING DRIVE SHAFT OUT OF MESH - IF MOTOR DOES NOT RUN, REPLACE MOTOR
CHECK GEAR TRAIN FOR BIND OR TIGHT MESHING
CHECK POWER INPUT
TAPE REELING
IMPROPERLY
PROPERLY
OK
CHECK PINION AND DRIVE GEAR MESH
CHECK REEL CORE SPRINGS FOR TIGHT HOLDING OF REEL CORE
CHECK FRICTION CLUTCH ADJUSTMENT
CHECK ADJUSTMENT OF STOP CAM AND STOP LEVER
CHECK TRIP LEVER FOR ADJUSTMENT AND MOUNTING
CHECK TIGHT TAPE ARM FOR FREENESS AND MOUNTING

TABLE 7-9. GOVERNED MOTOR TROUBLE SHOOTING CHART

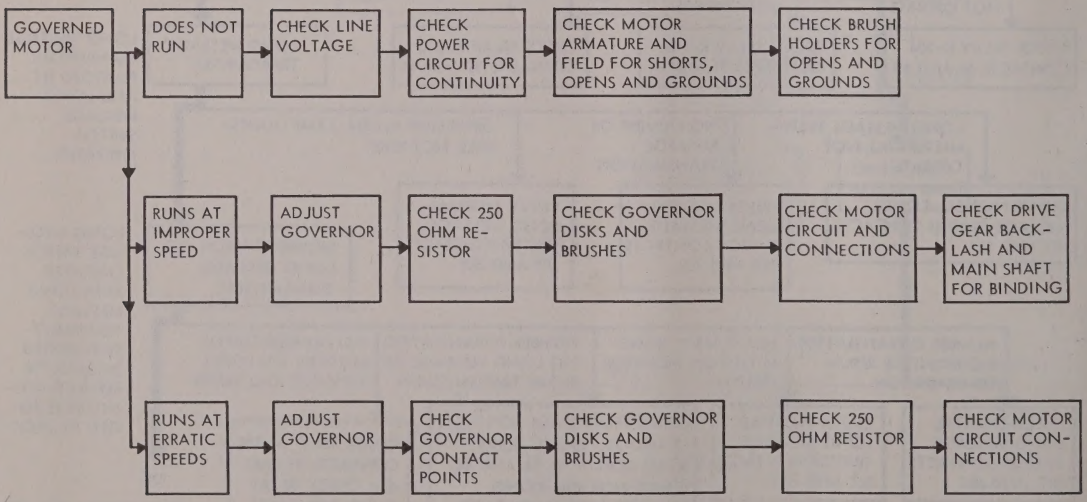
GOVERNED MOTOR
DOES NOT RUN
CHECK LINE VOLTAGE
CHECK POWER CIRCUIT FOR CONTINUITY
CHECK MOTOR ARMATURE AND FIELD FOR SHORTS, OPENS AND GROUNDS
CHECK BRUSH HOLDERS FOR OPENS AND GROUNDS
RUNS AT IMPROPER SPEED
ADJUST GOVERNOR
CHECK 250 OHM RESISTOR
CHECK GOVERNOR DISKS AND BRUSHES
CHECK MOTOR CIRCUIT AND CONNECTIONS
CHECK DRIVE GEAR BACKLASH AND MAIN SHAFT FOR BINDING
RUNS AT ERRATIC SPEEDS
ADJUST GOVERNOR
CHECK GOVERNOR CONTACT POINTS
CHECK GOVERNOR DISKS AND BRUSHES
CHECK 250 OHM RESISTOR
CHECK MOTOR CIRCUIT CONNECTIONS

MOTOR FAILS TO START
CHECK LINE VOLTAGE
CHECK MOTOR
SEE TABLE 7-9 FOR GOVERNED MOTOR
CHECK POWER CABLE
CHECK PLUG FOR OPEN CONTACTS
CHECK MAIN SHAFT
MOTOR RUNS REPERFORATOR RUNS OPEN
SEE TABLES 7-2 AND 7-5
CHECK REPERFORATOR PLUG
CHECK INTERNAL WIRING
CHECK SELECTOR MAGNET
CHECK ARMATURE TRIP-OFF LEVER ADJUSTMENT
CHECK MAIN SHAFT CLUTCH THROW-OUT LEVER
CHECK FOR DRY CLUTCHES
CHECK FOR FROZEN BEARINGS
CHECK FOR WORN OR BROKEN PARTS
REPERFORATOR PRINTS AND PERFORATES BUT DOES NOT RECEIVE
SEE TABLE 7-6
CHECK SELECTOR ARMATURE
CHECK FOR WEAK OR BROKEN RIBBON SPRING
CHECK FOR BINDING AT PIVOTS
CHECK ADJUSTMENT OF ARMATURE TRIP-OFF BRACKET
CHECK ARMATURE TRIP-OFF SCREW ADJUSTMENT
CHECK MAIN SHAFT CLUTCH THROW-OUT LEVER AND SPRING
REPERFORATOR PRINTS AND PERFORATES BUT HAS POOR RANGE
CHECK MOTOR SPEED GOVERNED MOTOR ONLY SEE TABLE 7-4
CHECK LINE VOLTAGE
CHECK POWER SUPPLY SEE TABLE 7-5
CHECK SELECTOR ARMATURE AND ARMATURE SPRING TENSION
CHECK ARMATURE BRACKET ADJUSTMENT
CHECK STOP LEVER ECCENTRIC SCREW ADJUSTMENT
CHECK LINKAGE BETWEEN LEVERS, SWORDS, CLEVERS AND CODE BARS FOR BINDS
CHECK SELECTOR FOR BINDS OR BROKEN PARTS
CHECK OTHER ADJUSTMENTS
ASK FOR CHECK OF REPERFORATOR AT TRANSMITTING STATION
ASK FOR CHECK OF TRANSMITTER AT TRANSMITTING STATION
REPERFORATOR PRINTS BUT MOTOR REMAINS MOTIONLESS
CHECK MESHING OF MOTOR SPOOL SHAFT AND FEED SHAFT GEARS
CHECK SPOOL SHAFT COLLAR AND SPRING
CHECK RIBBON FOR BINDING EYELETS
CHECK FEED SHAFT SPRING
CHECK REVERSE PAWL AND SPRING
CHECK FEED SHAFT RATCHET
CHECK RIBBON GUIDE
CHECK SEATING OF ON SHAFT SPOOL
REPERFORATOR PRINTS AND PERFORATES BUT HAS SOME LETTERS OR OCCASIONAL ERRORS
CHECK LINE CURRENT
CHECK REPERFORATOR CONTROL PANEL SEE TABLE 7-6
CHECK POWER SUPPLY SEE TABLE 7-5
CHECK RANGE FINDER FOR PROPER SETTING
CHECK MOTOR SPEED GOVERNED MOTORS ONLY SEE TABLE 7-9
CHECK THE CLUTCH LEVER LOCATED OPPOSITE POOR RANGE
CHECK MAIN SHAFT CLUTCH THROW-OUT LEVER AND SPRING
REPERFORATOR PRINTS BUT RIBBON DOES NOT REVERSE
CHECK RIBBON FOR BINDING EYELETS
CHECK RIBBON REVERSE SHAFT
CHECK RIBBON REVERSE COLLAR ON SHAFT
CHECK RIBBON REVERSE LEVER
CHECK RIBBON REVERSE PAWLS AND SPRINGS
REPERFORATOR PRINTS AND PERFORATES BUT DOES NOT PERFORATE PROPERLY
CHECK PUNCHES FOR BINDS
CHECK PUNCH SELECTOR FINGER GUIDE COMB
CHECK PUNCH TOP GUIDE
CHECK PUNCH LIFT-UP SCREW
CHECK PUNCH FINGERS
REPERFORATOR PRINTS AND PERFORATES BUT TAPE FEED-OUT MECHANISM FAILS TO OPERATE PROPERLY
FOR AUTOMATIC OPERATION
FOR MANUAL OPERATION
CHECK RELAYS K-101 AND K-102 IN RECEIVER CONTROL PANEL
CHECK MANUAL PUSH BUTTON ON REPERFORATOR
CHECK CLUTCH MAGNET SWITCH
CHECK CONTROL CIRCUIT FOR OPENS OR SHORTS
CHECK REVERSING SWITCH
CHECK ARMATURE BAIL AND SPRING
CHECK FEED-OUT CAM ROLLER ECCENTRIC ADJUSTMENT
CHECK CLUTCH ENGAGEMENT
CHECK CONTROL MAGNET ARMATURE WORM FOLLOWER AND SPRING
CHECK WORM FOLLOWER STUD
REPERFORATOR PRINTS AND PERFORATES BUT PLATEN FAILS TO OPERATE PROPERLY
CHECK PLASTIC PLATEN DISK
CHECK PLATEN SHAFT
CHECK PLATEN SHIFT LEVER BELL CRANK AND SPRING
CHECK SHIFT ROCKER, ROCKER ARM AND ROCKER LEVER
REPERFORATOR PRINTS AND PERFORATES BUT HAS GRINDING NOISE
CHECK MAIN SHAFT BEARINGS
CHECK BACK-SPACE MOTOR PINION AND MAIN SHAFT GEAR
CHECK MAIN SHAFT CLUTCH THROW-OUT LEVER
CHECK CLUTCH ON MAIN SHAFT OUT MECHANISM
CHECK MOTOR BEARINGS
REPERFORATOR PRINTS AND PERFORATES BUT BELL DOES NOT OPERATE
CHECK BELL PULL BRACKET AND SPRING
CHECK BELL PULL-BAR LOCK-OUT LEVER
CHECK BELL HAMMER AND SPRING
CHECK LOCK-OUT LEVER
CHECK PULL BAR LOCK-OUT ADJUSTING LEVER
CHECK BELL HAMMER ECCENTRIC SCREW
REPERFORATOR PERFORATES BUT FAILS TO PRINT PROPERLY
CHECK TYPE BARS
CHECK PULL BARS
CHECK CODE BARS
CHECK PRINTING MECHANISM
CHECK ITEMS LISTED OPPOSITE PLATEN MECHANISM FAILS TO OPERATE PROPERLY

TABLE 7-10. REPERFORATOR TROUBLE SHOOTING CHART

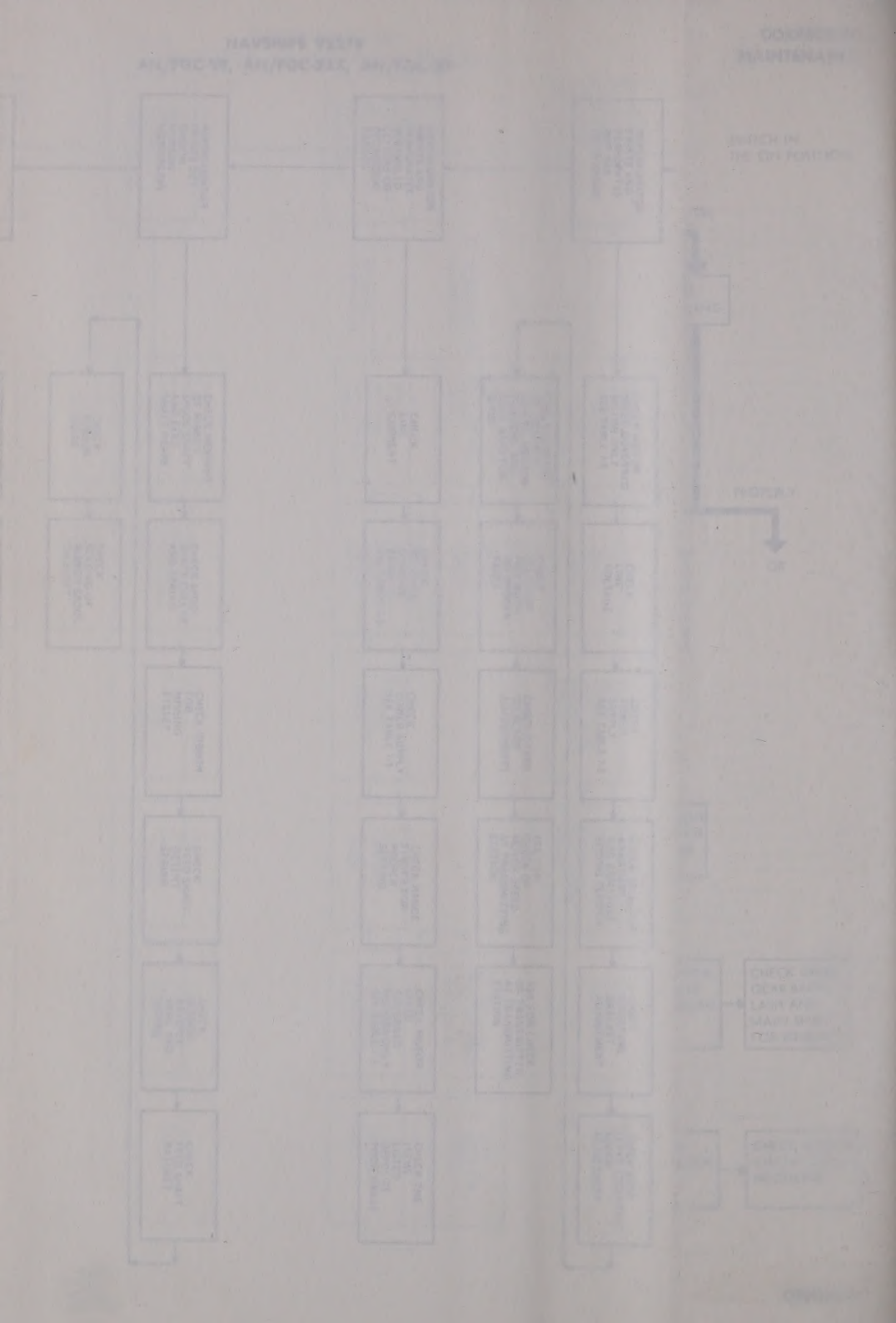

TABLE 7-11. TIME STAMP TROUBLE SHOOTING CHART

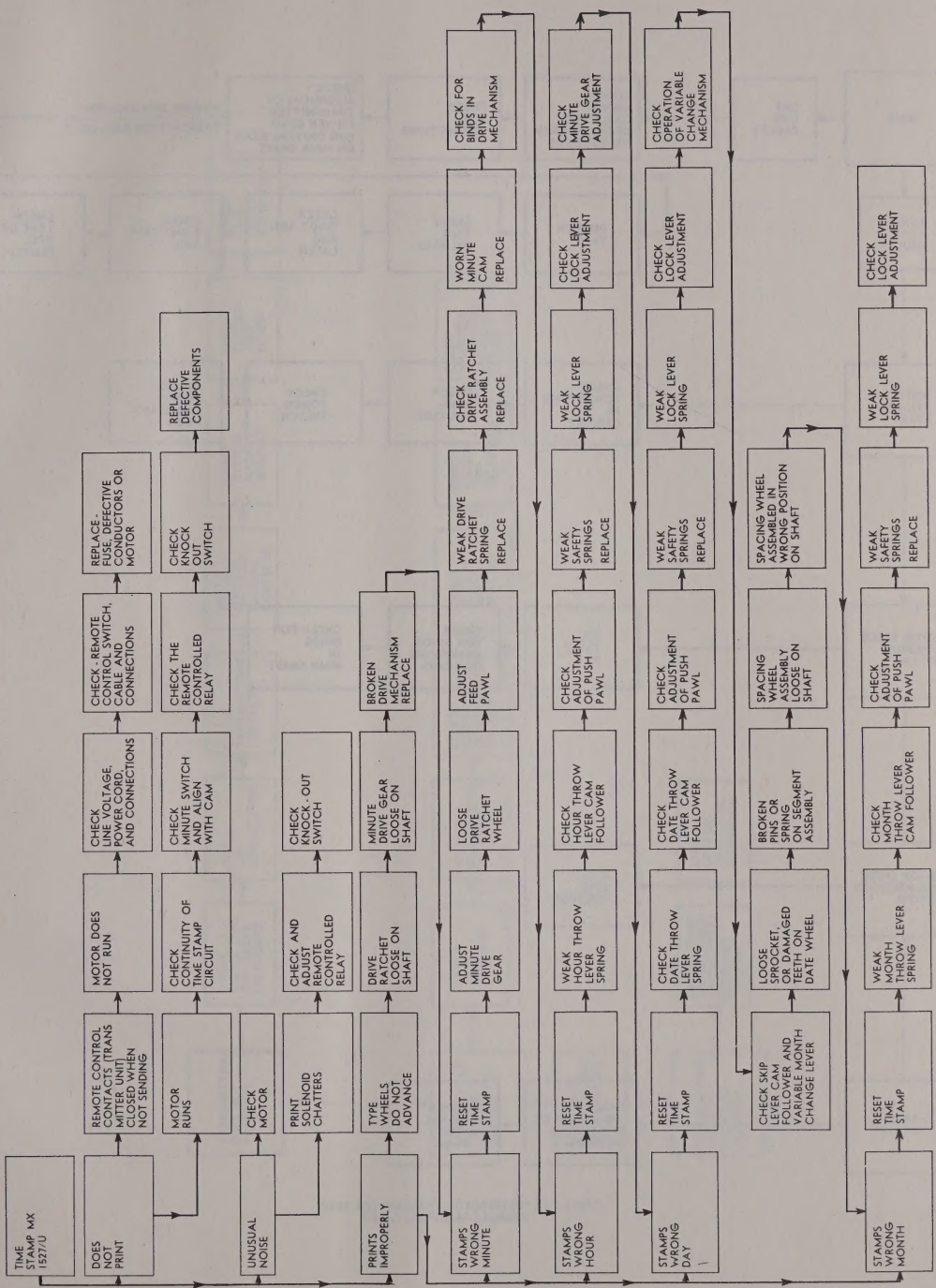
TIME STAMP MX 1527/U
DOES NOT PRINT
REMOTE CONTROL CONTACTS (TRANSMITTER UNIT) CLOSED WHEN NOT SENDING
MOTOR DOES NOT RUN
CHECK - REMOTE CONTROL SWITCH, CABLE AND CONNECTIONS
REPLACE - FUSE, DEFECTIVE CONDUCTORS OR MOTOR
MOTOR RUNS
CHECK CONTINUITY OF TIME STAMP CIRCUIT
CHECK THE REMOTE CONTROLLED RELAY
CHECK KNOCK OUT SWITCH
REPLACE DEFECTIVE COMPONENTS
UNUSUAL NOISE
CHECK MOTOR
CHECK LINE VOLTAGE, POWER CORD, AND CONNECTIONS
CHECK MINUTE SWITCH AND ALIGN WITH CAM
PRINT SOLENOID CHATTERS
CHECK AND ADJUST REMOTE CONTROLLED RELAY
CHECK KNOCK - OUT SWITCH
TYPE WHEELS DO NOT ADVANCE
DRIVE RATCHET LOOSE ON SHAFT
MINUTE DRIVE GEAR LOOSE ON SHAFT
BROKEN DRIVE MECHANISM REPLACE
PRINTS IMPROPERLY
RESET TIME STAMP
ADJUST MINUTE DRIVE GEAR
LOOSE DRIVE RATCHET WHEEL
ADJUST FEED PAWL
WEAK DRIVE RATCHET SPRING REPLACE
CHECK DRIVE RATCHET ASSEMBLY REPLACE
WORN MINUTE CAM REPLACE
CHECK FOR LOOSE IN DRIVE MECHANISM
STAMPS WRONG MINUTE
RESET TIME STAMP
WEAK HOUR THROW LEVER SPRING
CHECK HOUR THROW LEVER CAM FOLLOWER
CHECK ADJUSTMENT OF PUSH PAWL
WEAK SAFETY SPRINGS REPLACE
WEAK LOCK LEVER SPRING
CHECK LOCK LEVER ADJUSTMENT
CHECK MINUTE DRIVE GEAR ADJUSTMENT
STAMPS WRONG HOUR
RESET TIME STAMP
CHECK DATE THROW LEVER SPRING
CHECK DATE THROW LEVER CAM FOLLOWER
CHECK ADJUSTMENT OF PUSH PAWL
WEAK SAFETY SPRINGS REPLACE
WEAK LOCK LEVER SPRING
CHECK LOCK LEVER ADJUSTMENT
CHECK OPERATION OF VARIABLE CHANGE MECHANISM
STAMPS WRONG DAY
RESET TIME STAMP
CHECK SKIP LEVER CAM FOLLOWER AND ADJUST MONTH CHANGE LEVER
LOOSE SPROCKET, OR DAMAGED TEETH ON DATE WHEEL
BROKEN PINS OR MISSING SPIN SEGMENT ASSEMBLY
SPACING WHEEL ASSEMBLY LOOSE ON SHAFT
SPACING WHEEL ASSEMBLY IN WRONG POSITION ON SHAFT
WEAK MONTH THROW LEVER SPRING
CHECK MONTH THROW LEVER CAM FOLLOWER
CHECK ADJUSTMENT OF PUSH PAWL
WEAK SAFETY SPRINGS REPLACE
WEAK LOCK LEVER SPRING
CHECK LOCK LEVER ADJUSTMENT
STAMPS WRONG MONTH
RESET TIME STAMP

CORRECTIVE MAINTENANCE

- MOTOR FAILS START
  - CHECK LINE VOLTAGE
  - CHECK MOTOR
  - SEE TABLE 7-7 GOVERNED MOTOR
  - CHECK POWER CABLE
  - CHECK PLUG FOR OPEN CONTACTS
  - CHECK MAIN SHAFT
- MOTOR RUNS BUT REPERFORATOR RUNS OPEN
  - SEE TABLES 7-2 AND 7-6
  - CHECK REPERFORATOR PLUG
  - CHECK INTERNAL WIRING
  - CHECK SELECTOR MAGNET
  - CHECK ARMATURE TRIP-OFF SCREW ADJUSTMENT
  - CHECK MAIN SHAFT CLUTCH AND THROW-OUT LEVER
- REPERFORATOR RUNS BUT DOES NOT RECEIVE
  - SEE TABLE 7-6
  - CHECK SELECTOR ARMATURE
  - CHECK FOR WEAK OR BROKEN SPRING
  - CHECK FOR BINDING AT PIVOTS
  - CHECK ADJUSTMENT OF ARMATURE BRACKET
  - CHECK ARMATURE TRIP-OFF SCREW
- CHECK MAIN SHAFT CLUTCH LEVER AND SPRING
- CHECK FOR DRY CLUTCHES
  - CHECK FOR FROZEN BEARINGS
  - CHECK FOR WORN OR BROKEN PARTS

- REPERFORATOR PRINTS AND PERFORATES BUT HAS POOR RANGE
  - CHECK MOTOR SPEED GOVERNED MOTORS SEE TABLE 7-9
  - CHECK LINE VOLTAGE
  - CHECK POWER SUPPLY SEE TABLE 7-5
  - CHECK SELECTOR ARMATURE SPRING TENSION
  - CHECK ARMATURE ADJUSTMENT
  - CHECK STOP LEVER ECCENTRIC ADJUSTMENT
- REPERFORATOR PRINTS AND PERFORATES BUT ERRATIC SELECTION OF LETTERS OR OCCASIONAL ERRORS
  - CHECK LINE CURRENT
  - CHECK RANGE CONTROL SEE TABLE 7-6
  - CHECK POWER SUPPLY SEE TABLE 7-5
  - CHECK RANGE FINDER FOR SETTING
  - CHECK MOTOR GOVERNED MOTORS ONLY SEE TABLE 7-9
  - CHECK THE ITEMS LISTED OPPOSITE POOR RANGE
- CHECK LINKAGE OF SELECTOR LEVERS, SWORDS AND CODE BARS FOR BINDS
  - CHECK SELECTOR FOR WORN OR BROKEN PARTS
  - CHECK OTHER SELECTOR ADJUSTMENTS
  - ASK FOR CHECK OF MOTOR SPEED AT TRANSMITTING STATION
  - ASK FOR CHECK OF TRANSMITTER AT TRANSMITTING STATION
- REPERFORATOR PRINTS BUT REMAINS MOTIONLESS
  - CHECK MESHING OF RIBBON SPOOL SHAFT GEARS
  - CHECK SPOOL SHAFT COLLAR AND SPRING
  - CHECK RIBBON FOR MISSING EYELET
  - CHECK FEED SHAFT DETENT SPRING
  - CHECK RIBBON REVERSE PAWL AND SPRING
  - CHECK FEED RATCHET
- CHECK RIBBON GUIDE
  - CHECK OPERATION OF RIBBON SPOOL ON SHAFT
- REPERFORATOR PRINTS BUT RIBBON DOES NOT REVERSE
  - CHECK RIBBON REVERSING EYELETS
  - CHECK RIBBON FEED SHAFT
  - CHECK RIBBON SPOOL SHAFT COLLAR
  - CHECK CLUTCH REVERSE LEVER
  - CHECK REVERSING PAWLS REVERSE PAWLS AND SPRINGS
- REPERFORATOR PRINTS BUT DOES NOT PERFORATE PROPERLY
  - CHECK PUNCHES FOR BINDS
  - CHECK PUNCH SELECTOR FINGER GUIDE COMB
  - CHECK TAPE GUIDE
  - CHECK UP-STOP SCREW
  - CHECK PUNCH SELECTOR FINGERS

- REPERFORATOR PRINTS AND PERFORATES BUT TAPE FEED-OUT MECHANISM FAILS TO OPERATE PROPERLY
  - FOR AUTOMATIC OPERATION
    - CHECK K-99 (K-101) AND K-102 IN RECEIVER PANEL
    - CHECK CONTROL CIRCUITS FOR OPENS OR SHORTS
    - CHECK FEED-OUT MECHANISM
    - CHECK ARMATURE BACKSTOP AND SPRING
    - CHECK FEED-OUT CAM ROLLER ECCENTRIC ADJUSTMENT
    - CHECK CLUTCH ENGAGEMENT
  - FOR MANUAL OPERATION
    - CHECK MANUAL PUSH BUTTON ON REPERFORATOR
    - CLOSE CLUTCH MAGNET SWITCH
- REPERFORATOR PRINTS AND PERFORATES BUT TAPE FEED-OUT MECHANISM FAILS TO OPERATE PROPERLY
  - CHECK PLASTIC PLATEN DISK
  - CHECK PLATEN SHAFT
  - CHECK PLATEN SHIFT LEVER, BELL CRANK AND SPRING
  - CHECK SHIFT ROCKER, ROCKER ARM AND ROCKER LEVER
- REPERFORATOR PRINTS AND PERFORATES BUT BELL DOES NOT OPERATE
  - CHECK BELL CRANK BAR AND SPRING
  - CHECK PLATEN SHIFT LOCK-OUT LEVER
  - CHECK BELL HAMMER AND SPRING
  - CHECK LOCK-OUT LEVER
  - CHECK PULL SOLENOID LOCK-OUT ADJUSTING LEVER
  - CHECK HAMMER ECCENTRIC SCREW
- REPERFORATOR PRINTS AND PERFORATES BUT PAPER FEEDS BUT EMITS GRINDING NOISE
  - CHECK MAIN SHAFT BEARINGS
  - CHECK BACK-LASH BETWEEN MAIN MOTOR PINION AND MAIN SHAFT GEAR
  - CHECK MAIN SHAFT CLUTCH THROW-OUT LEVER
  - CHECK CLUTCH ON TAPE FEED OUT MECHANISM
  - CHECK BEARINGS
- REPERFORATOR PRINTS BUT PAPER FEEDS BUT PERFORATES NOT TO PRINT PROPERLY
  - CHECK TYPE BARS
  - CHECK PULL BARS
  - CHECK CODE BARS
  - CHECK PLATEN MECHANISM
  - CHECK ITEMS LISTED OPPOSITE PLATEN MECHANISM FAILS TO OPERATE PROPERLY
- CHECK MAGNET ARMATURE WORM FOLLOWER AND SPRING
  - CHECK WORM FOLLOWER STUD

TABLE 7-10. REPERFORATOR TROUBLE SHOOTING CHART

TABLE 7-11. TIME STAMP TROUBLE SHOOTING CHART

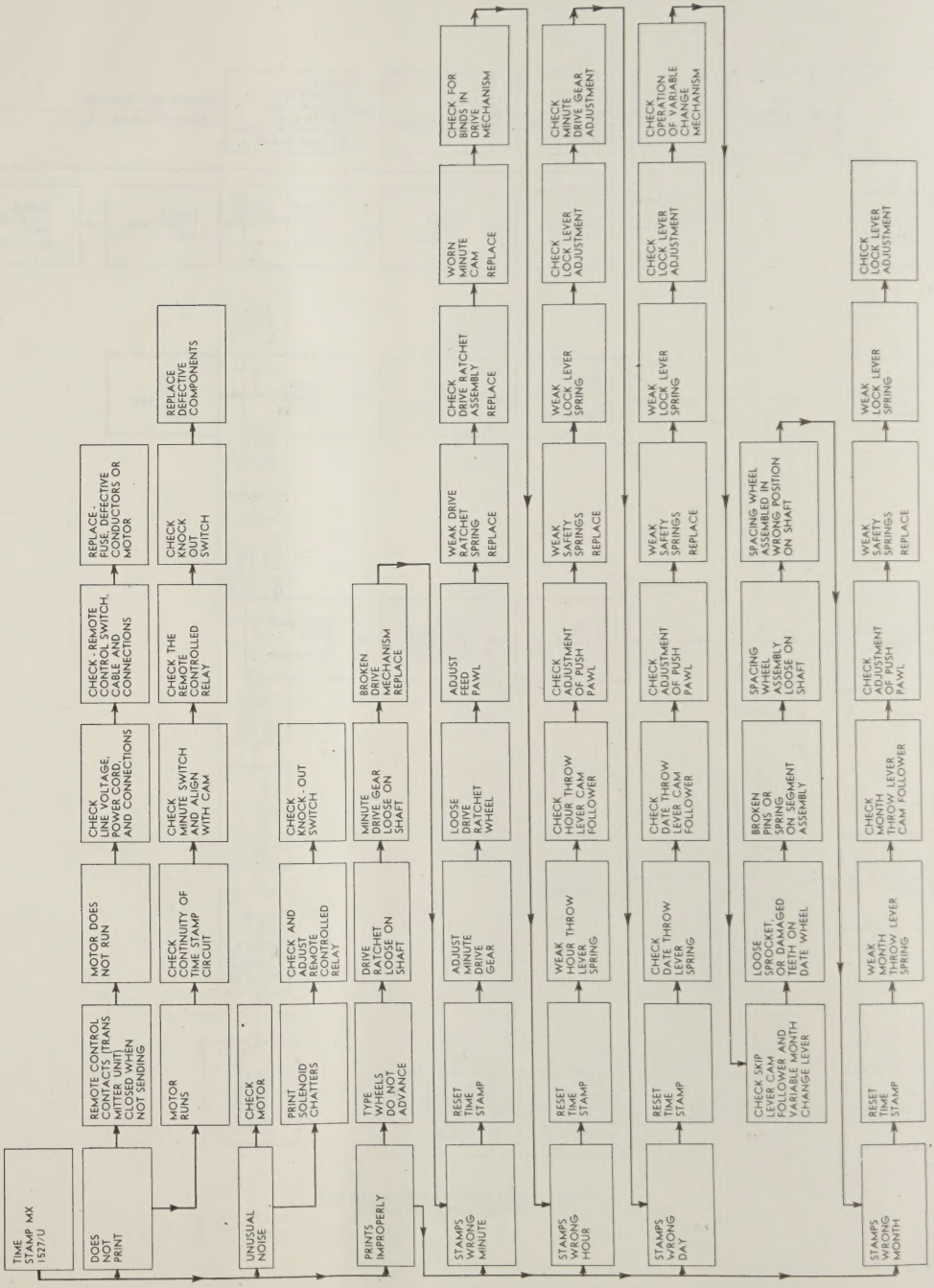
TIME STAMP MX 1527/U
DOES NOT PRINT
REMOTE CONTROL CONTACTS (TRANSMITTER UNIT) CLOSE WHEN NOT SENDING
MOTOR DOES NOT RUN
CHECK LINE VOLTAGE, POWER CORD, CABLE AND CONNECTIONS
CHECK - REMOTE CONTROL SWITCH, CABLE AND CONNECTIONS
REPLACE - FUSE, DEFECTIVE CONDUCTORS OR MOTOR
MOTOR RUNS
CHECK CONTINUITY OF TIME STAMP CIRCUIT
CHECK MINUTE SWITCH AND ALIGN WITH CAM
CHECK THE REMOTE CONTROLLED RELAY
CHECK CLOCK OUT SWITCH
REPLACE DEFECTIVE COMPONENTS
UNUSUAL NOISE
CHECK MOTOR
PRINTS IMPROPERLY
PRINT SOLENOID CHATTERS
CHECK AND ADJUST REMOTE CONTROLLED RELAY
CHECK KNOCK OUT SWITCH
TYPE WHEELS DO NOT ADVANCE
DRIVE RATCHET LOOSE ON SHAFT
MINUTE DRIVE GEAR LOOSE ON SHAFT
BROKEN DRIVE MECHANISM REPLACE
STAMPS WRONG MINUTE
RESET TIME STAMP
ADJUST MINUTE DRIVE GEAR
LOOSE DRIVE RATCHET WHEEL
ADJUST FEED PAWL
WEAK DRIVE RATCHET SPRING REPLACE
CHECK DRIVE RATCHET ASSEMBLY REPLACE
WORN MINUTE CAM REPLACE
CHECK FOR BINDS IN DRIVE MECHANISM
STAMPS WRONG HOUR
RESET TIME STAMP
WEAK HOUR THROW LEVER SPRING
CHECK HOUR THROW LEVER CAM FOLLOWER
CHECK ADJUSTMENT OF PUSH PAWL
WEAK SAFETY SPRINGS REPLACE
WEAK LOCK LEVER SPRING
CHECK LOCK LEVER ADJUSTMENT
CHECK MINUTE DRIVE GEAR ADJUSTMENT
STAMPS WRONG DAY
RESET TIME STAMP
CHECK DATE THROW LEVER SPRING
CHECK DATE THROW LEVER CAM FOLLOWER
CHECK ADJUSTMENT OF PUSH PAWL
WEAK SAFETY SPRINGS REPLACE
WEAK LOCK LEVER SPRING
CHECK LOCK LEVER ADJUSTMENT
CHECK OPERATION OF VARIABLE CHANGE MECHANISM
CHECK SKIP LEVER CAM FOLLOWER AND VARIABLE MONTH CHANGE LEVER
LOOSE SPROCKET, OR DAMAGED TEETH ON DATE WHEEL
BROKEN PINS OR SPRING ON SEGMENT ASSEMBLY
SPACING WHEEL ASSEMBLY LOOSE ON SHAFT
SPACING WHEEL ASSEMBLED IN WRONG POSITION ON SHAFT
STAMPS WRONG MONTH
RESET TIME STAMP
WEAK MONTH THROW LEVER SPRING
CHECK MONTH THROW LEVER CAM FOLLOWER
CHECK ADJUSTMENT OF PUSH PAWL
WEAK SAFETY SPRINGS REPLACE
WEAK LOCK LEVER SPRING
CHECK LOCK LEVER ADJUSTMENT

TABLE 7-12. DISTRIBUTOR-TRANSMITTER BASE TROUBLE SHOOTING CHART

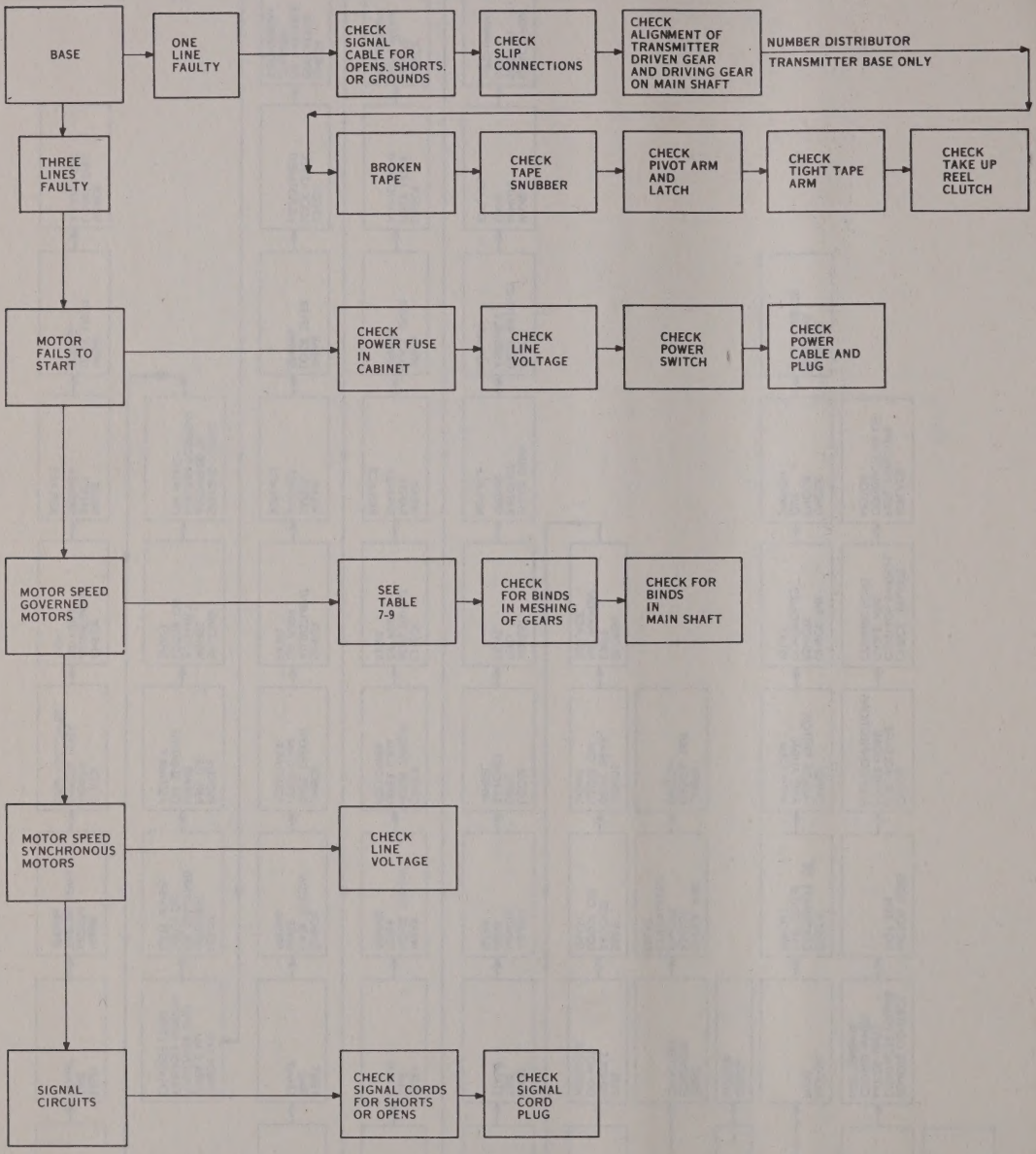
BASE
ONE LINE FAULTY
CHECK SIGNAL CABLE FOR OPENS, SHORTS, OR GROUNDS
CHECK SLIP CONNECTIONS
CHECK ALIGNMENT OF TRANSMITTER DRIVEN GEAR AND DRIVING GEAR ON MAIN SHAFT
NUMBER DISTRIBUTOR
TRANSMITTER BASE ONLY
THREE LINES FAULTY
BROKEN TAPE
CHECK TAPE SNUBBER
CHECK PIVOT ARM AND LATCH
CHECK TIGHT TAPE ARM
CHECK TAKE UP REEL CLUTCH
MOTOR FAILS TO START
CHECK POWER FUSE IN CABINET
CHECK LINE VOLTAGE
CHECK POWER SWITCH
CHECK POWER CABLE AND PLUG
MOTOR SPEED GOVERNED MOTORS
SEE TABLE 7-9
CHECK FOR BINDS IN MESHING OF GEARS
CHECK FOR BINDS IN MAIN SHAFT
MOTOR SPEED SYNCHRONOUS MOTORS
CHECK LINE VOLTAGE
SIGNAL CIRCUITS
CHECK SIGNAL CORDS FOR SHORTS OR OPENS
CHECK SIGNAL CORD PLUG

TABLE 7-12. DISTRIBUTOR TRANSMITTER BASE TROUBLE SHOOTING CHART

TABLE 7-13. DISTRIBUTOR-TRANSMITTER TROUBLE SHOOTING CHART

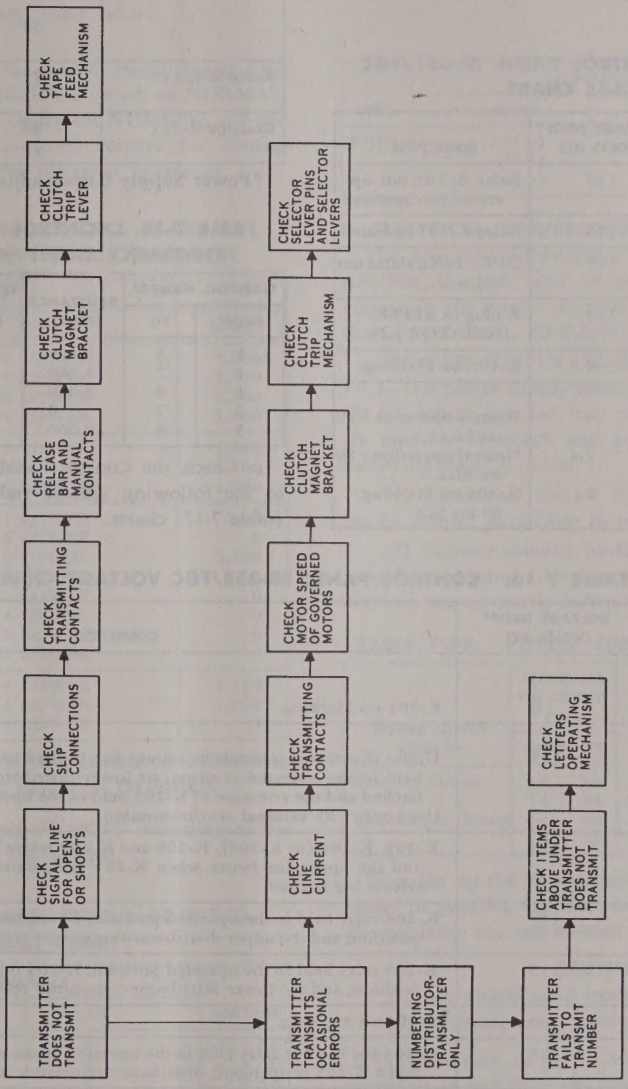
TRANSMITTER DOES NOT TRANSMIT
CHECK SIGNAL LINE FOR OPENS OR SHORTS
CHECK SLIP CONNECTIONS
CHECK TRANSMITTING CONTACTS
CHECK RELEASE BAR AND MANUAL CONTACTS
CHECK CLUTCH MAGNET BRACKET
CHECK CLUTCH TRIP LEVER
CHECK TAPE FEED MECHANISM
TRANSMITTER TRANSMITS OCCASIONAL ERRORS
CHECK LINE CURRENT
CHECK TRANSMITTING CONTACTS
CHECK MOTOR SPEED OF GOVERNED MOTORS
CHECK CLUTCH MAGNET BRACKET
CHECK CLUTCH TRIP MECHANISM
CHECK SELECTOR LEVER PINS AND SELECTOR LEVERS
NUMBERING DISTRIBUTOR-TRANSMITTER ONLY
TRANSMITTER FAILS TO TRANSMIT NUMBER
CHECK ITEMS ABOVE UNDER TRANSMITTER DOES NOT TRANSMIT
CHECK LETTERS OPERATING MECHANISM

4. RESISTANCE AND VOLTAGE CHARTS.

a. Check the voltage at the power input terminal board on each group (TB-1901, TB-2001, and TB-301). Using an a-c voltmeter on the 300-volt scale, the meter should read 115 volts between terminals 3 and 5.

b. Check the Control Panel SB-357/FGC according to the following voltage (table 7-14) and resistance (table 7-15) charts.

TABLE. 7-14. CONTROL PANEL SB-357/FGC VOLTAGE CHART

COMPONENTS	VOLTAGE DROP* (VOLTS DC)	CONDITION
Relay Coil K-101	115	Relay K-105 not operated (on spacing).
Relay Coil K-102	115	Relay K-101 operated.
Relay Coil K-103	115	OPEN LINE alarm not lighted.
Relay Coil K-104	115	A plug in REPERFORATOR jack.
Relay Coil K-105	0.3	K-106 on Marking
Relay Coil K-106		
Terminals 2 and 7	4	Neutral operation - 30 ma bias.
	1.4	Neutral operation - 10 ma bias.
Terminals 3 and 6	8	K-106 on Marking - 60 ma line
Filter Unit Z-101		
Terminals 3 and 4	23	K-106 on spacing.
Terminals 2 and 7	24	K-106 on marking.
Resistor R-108	5.7	K-106 on spacing.
Resistor R-109	111	Neutral operation - 30 ma bias.
	38	Neutral operation - 10 ma bias.
Resistor R-110	75	Neutral operation - 10 ma bias.
Resistor R-111	86	K-106 on spacing.
	90	K-106 on marking.

*Power Supply output adjusted to 115 volts.

TABLE 7-15. CONTROL PANEL SB-357/FGC RESISTANCE CHART (K-106 REMOVED)

TERMINAL NUMBER		RESISTANCE (OHMS)	TERMINAL NUMBER		RESISTANCE (OHMS)
FROM	TO		FROM	TO	
1	3	2,000	4	9	5
1	7	2,000	5	25	0
1	8	8,000	6	12	2,500
3	7	0	7	8	10,000
3	8	10,000	16	17	8,000

c. Check the Control Panel SB-358/FGC according to the following voltage (table 7-16) and resistance (table 7-17) charts.

TABLE 7-16. CONTROL PANEL SB-358/FGC VOLTAGE CHART

COMPONENTS	VOLTAGE DROP* (VOLTS DC)	CONDITION
Relay Coil K-201		
Terminals 2 and 7	4	
Terminals 3 and 6	8	K-201 on Marking
Relay Coil K-202		
Heel winding	115	Upper distributor-transmitter release bar latched and the armature of K-204 held in the operated position, or lower distributor-transmitter release bar latched and the armature of K-205 held in the operated position.
Armature winding		Used only with external synchronization.
Relay Coil K-203	115	K-202, K-204 (or K-205), K-208 and K-209 relays held in operated position and the upper (or lwoer when K-205 is operated) distributor-transmitter release bar latched.
Relay Coil K-204	115	K-204 relay held in the operated position, K-205 relay held in the unoperated position, and the upper distributor-transmitter release bar latched.
Relay Coil K-205	115	K-205 relay held in the operated position, K-204 relay held in the unoperated position, and the lower distributor-transmitter release bar latched.
Relay Coil K-206	0.3	K-201 on marking.
Relay Coil K-207	115	K-204 (or K-205) relay held in the operated position and the upper (or lower when K-205 is operated) distributor-transmitter release bar latched.
Relay Coil K-208	115	OPEN LINE alarm lamp not lighted.
Relay Coil K-209	115	
Relay Coil K-210	115	K-209 and K-210 relays held in the operated position.
Resistor R-201	30**	K-201 on spacing.
Resistor R-202	30**	K-201 on spacing.

COMPONENTS	VOLTAGE DROP* (VOLTS DC)	CONDITION
Resistor R-203	111	
Resistor R-204	105	K-201 on marking.
Resistor R-205	60**	K-201 on marking.
Resistor R-207	55**	K-201 on marking.

*Power supply adjusted to 115 volts.
**On polar operation halve these values.

For the above values the control panel should have d-c power, the LONG MESSAGE switch on NORMAL, the NUMBER-DELETE switch on NUMBER, and the line current adjusted to 0.060 ampere for neutral operation or 0.030 ampere for polar operation.

TABLE 7-17. CONTROL PANEL SB-358/FGC RESISTANCE CHART* (K-201 REMOVED)

TERMINAL NUMBER		RESISTANCE (OHMS)
FROM	TO	
1 UPPER	2 UPPER	5,000
	7 LOWER	2,500
	18 LOWER	6,500
	24 LOWER	5,800
2 UPPER	7 LOWER	2,500
	18 LOWER	6,500
	24 LOWER	5,800
4 UPPER	11 LOWER	0
5 UPPER	6 LOWER	0
6 UPPER	19 UPPER	3,300
7 UPPER	22 UPPER	0
8 UPPER	22 LOWER	0
10 UPPER	24 UPPER	0
14 UPPER	20 LOWER	0
23 UPPER	15 LOWER	0
1 LOWER	3 LOWER	1,750
9 LOWER	14 LOWER	1,000
10 LOWER	12 LOWER	5

*NORMAL-LONG MESSAGE switch on NORMAL, and NUMBER-DELETE switch on NUMBER.

d. Check Power Supply PP-987/U according to the following voltage chart (table 7-18).

TABLE 7-18. POWER SUPPLY PP-987/U VOLTAGE CHART

UNIT	TERMINALS		VOLTAGE
	FROM	TO	
T-501	1	2	115 AC
	3	4	2.5 AC
	4	5	2.5 AC
	5	6	2.5 AC
	6	7	2.5 AC
	7	8	140 AC
	8	9	12.5 AC
	9	10	12.5 AC
	11	12	102 AC
	12	13	102 AC
P-502	13(+)	14(−)	115 DC
	14(+)	15(−)	115 DC
	14(+)	16(−)	115 DC

5. ELECTRICAL ADJUSTMENTS.

The electrical adjustments of Teletypewriter Sets AN/FGC-38, 38X, and 39 consist of adjusting the voltage in the power supplies and the line current at the Control Panels SB-358/FGC.

a. POWER SUPPLY ADJUSTMENT. (See figure 7-1.)—The power supply contains rectifiers CR-501 and CR-502 which age and may require adjustment every six months. To check and adjust, proceed with the following steps in order:

(1) Disconnect the a-c input power and remove the d-c output plug from its receptacle.

(2) Connect dummy loads to the d-c output plug according to table 7-19. Use either lamps or resistors between the terminals indicated.

TABLE 7-19. POWER SUPPLY DUMMY LOADS

POWER SUPPLY USED IN	TERMINALS ON OUTPUT PLUG		RESISTOR (OHMS	LAMPS (WATTS)
	FROM	TO		
Receiver Group	14	16	320 (40 WATTS)	40
	14	15	240 (60 WATTS)	60
Transmitter Group	14	16	255 (50 WATTS)	50
	14	15	150 (85 WATTS)	85

To make up the 50-watt lamp load, use two 25-watt lamps in parallel, and for the 85-watt load, use one 25-watt lamp and one 60-watt lamp in parallel.

CAUTION

Do not exceed rated loads on the power supply or damage may result.

(3) Connect an 0-150 volt d-c voltmeter across terminals 14 and 16 of the output plug.

(4) Energize the power supply through plug P-501 with 115 volts alternating current. Place the switch S-501 in the ON position.

(5) The d-c voltmeter should read 115 volts. To adjust, reposition the taps on TB-501. To find the

proper tap, refer to table 7-20. When it is necessary to use taps 5 and H, replace CR-501 and CR-502.

TABLE 7-20. POWER SUPPLY ADJUSTMENT DATA

DC OUTPUT VOLTAGE CHANGE	TAPS		DC OUTPUT VOLTAGE CHANGE	TAPS	
	FROM	TO		FROM	TO
+12.5	L	M	−12.5	H	M
+12.5	M	H	−12.5	M	L
+ 2.5	1	2	− 2.5	5	4
+ 2.5	2	3	− 2.5	4	3
+ 2.5	3	4	− 2.5	3	2
+ 2.5	4	5	− 2.5	2	1

b. LINE CURRENT ADJUSTMENT. *(See figure 7-2.)*—Before the initial application of power and before this adjustment is made, the LINE CURRENT rheostat should be in the minimum current position. To check and adjust transmitting line current on any one line, insert the ammeter plug in the LINE jack on the Control Panel SB-358/FGC for that line and adjust the LINE CURRENT rheostat (R-207) and the slide wire resistor (R-202) as follows:

Note

The slide wire resistor is mounted on the rear of the Control Panel; this resistor is adjusted at the factory and normally should require no further adjustment.

With the line on steady marking (idle line condition), adjust the line current, by means of rheostat R-207, to 0.060 ampere. Adjust resistor (R-202), if nec-

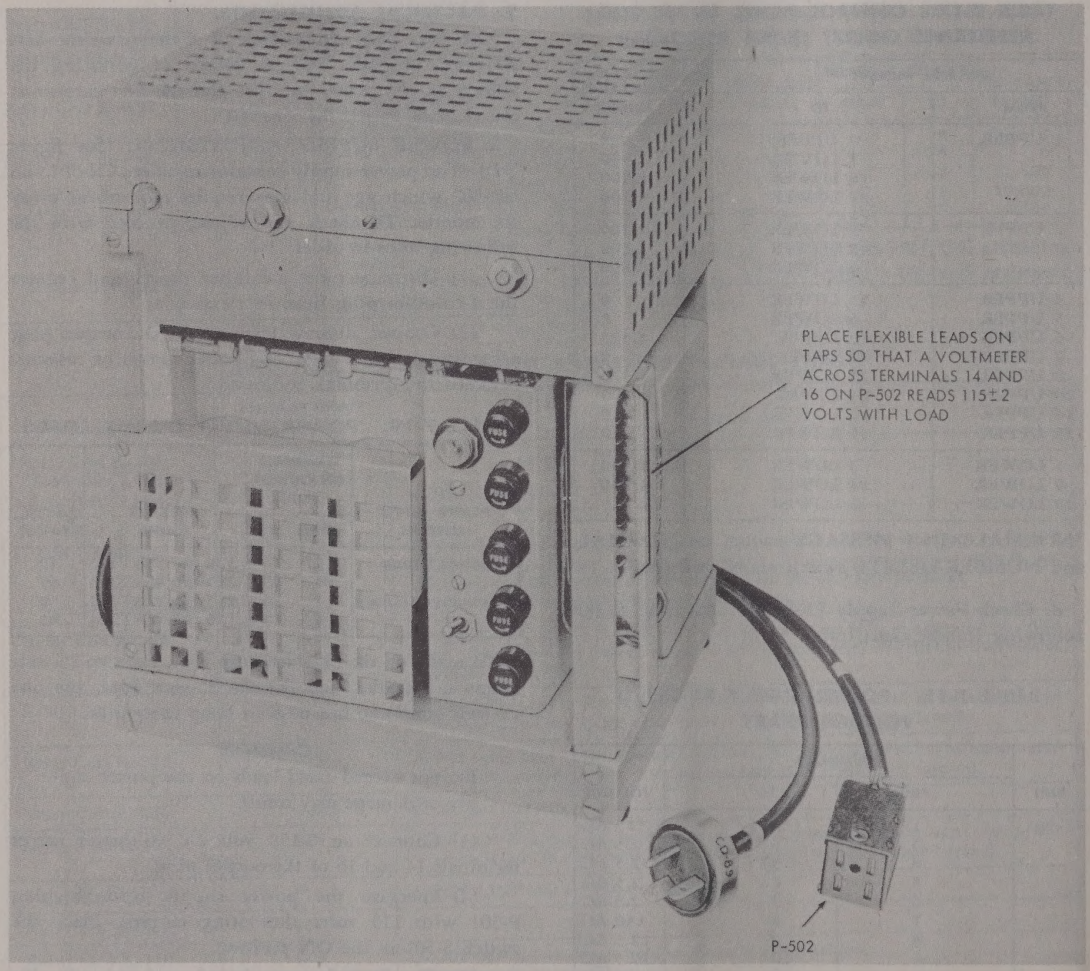

Figure 7—1. Power Supply PP-987/U, Adjustments

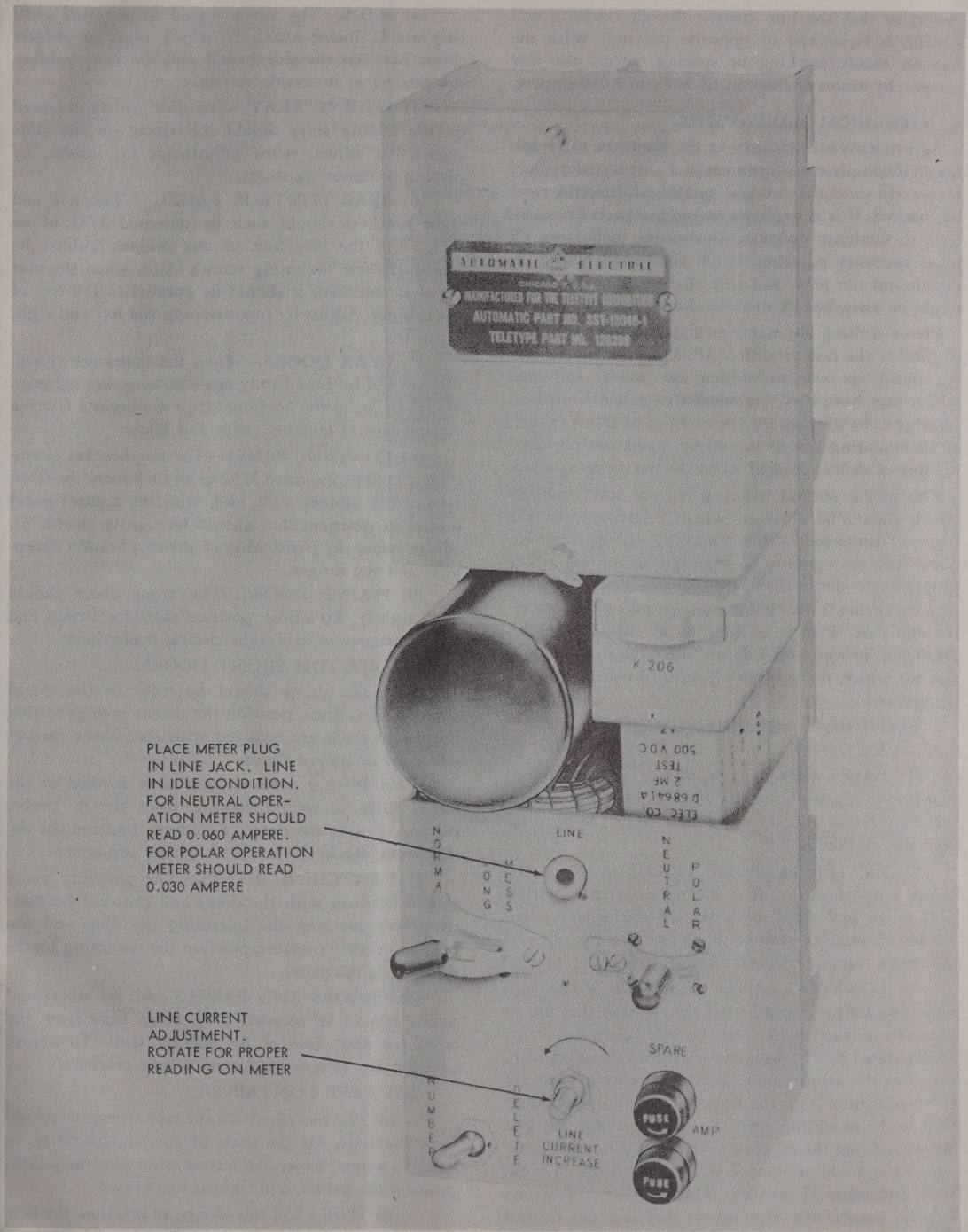
PLACE METER PLUG IN LINE JACK. LINE IN IDLE CONDITION. FOR NEUTRAL OPERATION METER SHOULD READ 0.060 AMPERE. FOR POLAR OPERATION METER SHOULD READ 0.030 AMPERE
LINE CURRENT ADJUSTMENT. ROTATE FOR PROPER READING ON METER
K 206
LINE
NEUTRAL
POLAR
SPARE
FUSE
AMP
LINE CURRENT INCREASE

Figure 7—2. Control Panel SB-358/FGC, Line Current Adjustment

essary, so that the line current during marking and spacing is equal and of opposite polarity. With the line on steady marking or spacing, adjust the line current, by means of rheostat (R-207), to 0.030 ampere.

6. MECHANICAL ADJUSTMENTS.

Adjustments are arranged in the sequence to be followed if complete readjustment of a unit is undertaken. If one adjustment is changed, related adjustments must be checked. If it is necessary to remove parts or assemblies to facilitate making adjustments, make sure all other necessary adjustments are completed before reassembling the parts and that any adjustments which might be disturbed by this disassembly are checked.

Before making any adjustments, read the applicable portion of the text carefully. After the adjustments are completed, be sure to tighten any screws and nuts which may have been loosened. If a part mounted on shims is to be dismantled, the number of shims at each of its mounting screws should be noted and the same number of shims replaced when the part is remounted.

The spring tension values given are scale readings which should be obtained when Teletype scales are used as instructed. When checking spring tensions, make sure the pressure on the scale is applied at the proper angle and in the right direction. Check to make sure the spring is not rubbing on any part of the assembly and that there is no binding at the spring post. Damaged springs which do not meet the specifications and for which there is no adjusting procedure should be replaced.

a. ELECTRICAL EQUIPMENT CABINET CY-1523/FGC.

(1) BASE.—Adjust the wire duct in the base so that it is in line with the front base frame and that the rear base frame and the three base parts are flush on each side and the bottom.

(2) CENTER SUPPORT FRAME. — Adjust the center support so that it is the same distance, within 1/32 of an inch, from each side of the cabinet shell. To adjust, place or remove shims between the nut and the center support brackets (see figure 7-3).

(3) CONTROL PANEL SUPPORT. — The two mounting strips should be adjusted so that they are in the same vertical plane and the two mounting strips are separated by 11-5/16 inches, within 1/32 of an inch, and that the tapped holes in the mounting strip are in vertical lines with the centers of the corresponding slots in the mounting strip. To adjust, remove the two screws holding the mounting strip to the control panel support and add or remove washers until the 11-5/16-inch dimension is satisfied. Then replace the screws loosely. Loosen the two screws holding the control panel support and adjust the center support and the mounting strip. Tighten all the screws.

(4) SLIDE.—The slides should be adjusted until they are 11 inches apart. To adjust, place or remove shims between the side panels and the nuts holding the side panel mounting screws.

(5) SLIDING TRAY.—The slide rollers mounted on the sliding trays should roll freely on the slide tracks. To adjust, refine adjustment (4), above, by placing or removing shims.

(6) REAR CONTROL PANEL. — The left and right brackets should each be mounted 7/32 of an inch from the rear face of the cabinet. Adjust by means of their mounting screws. Also, when the rear panel is mounted, it should be parallel to the top of the cabinet. Adjust by repositioning the left and right brackets.

(7) REAR DOORS.—When the doors are closed, they should be held firmly against the center support. To adjust, bend the latching strips to obtain a friction engagement of latching strips and latch.

(8) CONTROL PANEL.—The two bracket assemblies should be mounted 7/32 of an inch from the front face of the cabinet shell, and, with the control panel locked in position, they should be tightly closed. To adjust, refine the positioning of the two bracket assemblies and the hinges.

(9) FRONT DOORS.—The front doors should latch tightly. To adjust, position the door strikes and latch fasteners until a tight closing is obtained.

(10) BOTTOM FRONT DOORS.

(*a*) The doors should be tight in the closed position. To adjust, position the detent springs so that the detent studs are engaged with the detent springs when the doors are closed.

(*b*) With a twelve-pound scale hooked to the finger grip, it should require from six to twelve pounds to open the doors. To adjust, position the detent studs. Recheck the detent spring adjustment.

(11) PATCHING PANEL.—The patching panel should be flush with the doors and centered between the doors covering the operating positions and the bottom doors. To adjust, position the mounting brackets holding the panel.

(12) DOORS AND PANELS.—All the doors and panels should be recessed 5/32 of an inch from the front (or rear) face of the cabinet shell. To adjust, position the hinges and/or mounting brackets.

(13) TAPE CONTAINER.

(*a*) The two panels on the tape container should have the slots, for the shaft of the wooden filler, in line. To adjust, loosen the screws mounting the panels, position the panels, and tighten the screws.

(*b*) With a full roll of tape in position, the tape out lever should touch the tape roll only with the long end. To adjust, bend the lever.

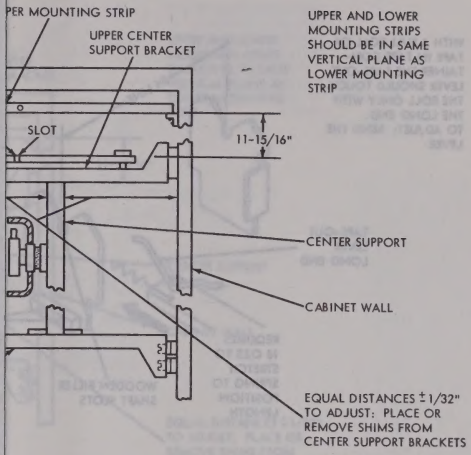
PER MOUNTING STRIP
UPPER CENTER SUPPORT BRACKET
UPPER AND LOWER MOUNTING STRIPS SHOULD BE IN SAME VERTICAL PLANE AS LOWER MOUNTING STRIP
SLOT
11-15/16"
CENTER SUPPORT
CABINET WALL
EQUAL DISTANCES ± 1/32" TO ADJUST: PLACE OR REMOVE SHIMS FROM CENTER SUPPORT BRACKETS

T ADJUSTMENTS

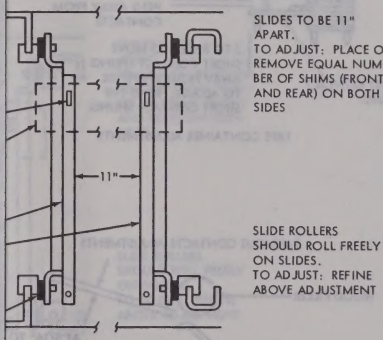
SLIDES TO BE 11" APART.
TO ADJUST: PLACE OR REMOVE EQUAL NUMBER OF SHIMS (FRONT AND REAR) ON BOTH SIDES
11"
SLIDE ROLLERS SHOULD ROLL FREELY ON SLIDES.
TO ADJUST: REFINE ABOVE ADJUSTMENT

essary, so that the line current during marking and spacing is equal and of opposite polarity. With the line on steady marking or spacing, adjust the line current, by means of rheostat (R-207), to 0.030 ampere.

6. MECHANICAL ADJUSTMENTS.

Adjustments are arranged in the sequence to be followed if complete readjustment of a unit is undertaken. If one adjustment is changed, related adjustments must be checked. If it is necessary to remove parts or assemblies to facilitate making adjustments, make sure all other necessary adjustments are completed before reassembling the parts and that any adjustments which might be disturbed by this disassembly are checked.

Before making any adjustments, read the applicable portion of the text carefully. After the adjustments are completed, be sure to tighten any screws and nuts which may have been loosened. If a part mounted on shims is to be dismantled, the number of shims at each of its mounting screws should be noted and the same number of shims replaced when the part is remounted.

The spring tension values given are scale readings which should be obtained when Teletype scales are used as instructed. When checking spring tensions, make sure the pressure on the scale is applied at the proper angle and in the right direction. Check to make sure the spring is not rubbing on any part of the assembly and that there is no binding at the spring post. Damaged springs which do not meet the specifications and for which there is no adjusting procedure should be replaced.

a. ELECTRICAL EQUIPMENT CABINET CY-1523/FGC.

(1) BASE.—Adjust the wire duct in the base so that it is in line with the front base frame and that the rear base frame and the three base parts are flush on each side and the bottom.

(2) CENTER SUPPORT FRAME. — Adjust the center support so that it is the same distance, within 1/32 of an inch, from each side of the cabinet shell. To adjust, place or remove shims between the nut and the center support brackets (see figure 7-3).

(3) CONTROL PANEL SUPPORT. — The two mounting strips should be adjusted so that they are in the same vertical plane and the two mounting strips are separated by 11-5/16 inches, within 1/32 of an inch, and that the tapped holes in the mounting strip are in vertical lines with the centers of the corresponding slots in the mounting strip. To adjust, remove the two screws holding the mounting strip to the control panel support and add or remove washers until the 11-5/16-inch dimension is satisfied. Then replace the screws loosely. Loosen the two screws holding the control panel support and adjust the center support and the mounting strip. Tighten all the screws.

(4) SLIDE.—The slides should be adjusted until they are 11 inches apart. To adjust, place or remove shims between the side panels and the nuts holding the side panel mounting screws.

(5) SLIDING TRAY.—The slide rollers mounted on the sliding trays should roll freely on the slide tracks. To adjust, refine adjustment (4), above, by placing or removing shims.

(6) REAR CONTROL PANEL. — The left and right brackets should each be mounted 7/32 of an inch from the rear face of the cabinet. Adjust by means of their mounting screws. Also, when the rear panel is mounted, it should be parallel to the top of the cabinet. Adjust by repositioning the left and right brackets.

(7) REAR DOORS.—When the doors are closed, they should be held firmly against the center support. To adjust, bend the latching strips to obtain a friction engagement of latching strips and latch.

(8) CONTROL PANEL.—The two bracket assemblies should be mounted 7/32 of an inch from the front face of the cabinet shell, and, with the control panel locked in position, they should be tightly closed. To adjust, refine the positioning of the two bracket assemblies and the hinges.

(9) FRONT DOORS.—The front doors should latch tightly. To adjust, position the door strikes and latch fasteners until a tight closing is obtained.

(10) BOTTOM FRONT DOORS.

(*a*) The doors should be tight in the closed position. To adjust, position the detent springs so that the detent studs are engaged with the detent springs when the doors are closed.

(*b*) With a twelve-pound scale hooked to the finger grip, it should require from six to twelve pounds to open the doors. To adjust, position the detent studs. Recheck the detent spring adjustment.

(11) PATCHING PANEL.—The patching panel should be flush with the doors and centered between the doors covering the operating positions and the bottom doors. To adjust, position the mounting brackets holding the panel.

(12) DOORS AND PANELS.—All the doors and panels should be recessed 5/32 of an inch from the front (or rear) face of the cabinet shell. To adjust, position the hinges and/or mounting brackets.

(13) TAPE CONTAINER.

(*a*) The two panels on the tape container should have the slots, for the shaft of the wooden filler, in line. To adjust, loosen the screws mounting the panels, position the panels, and tighten the screws.

(*b*) With a full roll of tape in position, the tape out lever should touch the tape roll only with the long end. To adjust, bend the lever.

NAVSHIPS 92378
AN/FGC-38, AN/FGC-38X, AN/FGC-39

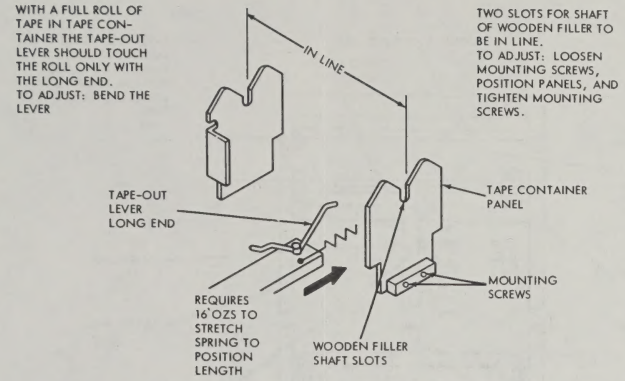
WITH A FULL ROLL OF TAPE IN TAPE CONTAINER THE TAPE-OUT LEVER SHOULD TOUCH THE ROLL ONLY WITH THE LONG END.
TO ADJUST: BEND THE LEVER
IN LINE
TWO SLOTS FOR SHAFT OF WOODEN FILLER TO BE IN LINE.
TO ADJUST: LOOSEN MOUNTING SCREWS, POSITION PANELS, AND TIGHTEN MOUNTING SCREWS.
TAPE-OUT LEVER LONG END
TAPE CONTAINER PANEL
MOUNTING SCREWS
REQUIRES 16 OZS TO STRETCH SPRING TO POSITION LENGTH
WOODEN FILLER SHAFT SLOTS

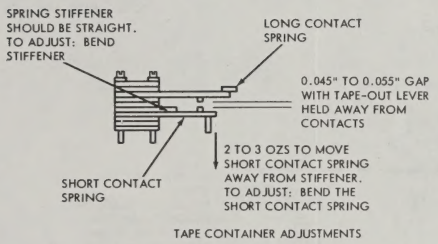
SPRING STIFFENER SHOULD BE STRAIGHT.
TO ADJUST: BEND STIFFENER
LONG CONTACT SPRING
0.045" TO 0.055" GAP WITH TAPE-OUT LEVER HELD AWAY FROM CONTACTS
2 TO 3 OZS TO MOVE SHORT CONTACT SPRING AWAY FROM STIFFENER.
TO ADJUST: BEND THE SHORT CONTACT SPRING
SHORT CONTACT SPRING

TAPE CONTAINER ADJUSTMENTS

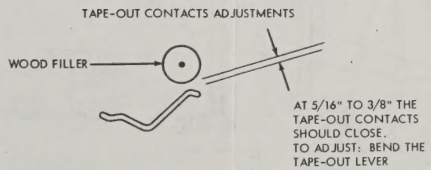
TAPE-OUT CONTACTS ADJUSTMENTS
WOOD FILLER
AT 5/16" TO 3/8" THE TAPE-OUT CONTACTS SHOULD CLOSE.
TO ADJUST: BEND THE TAPE-OUT LEVER

CONTACT CLOSING ADJUSTMENTS

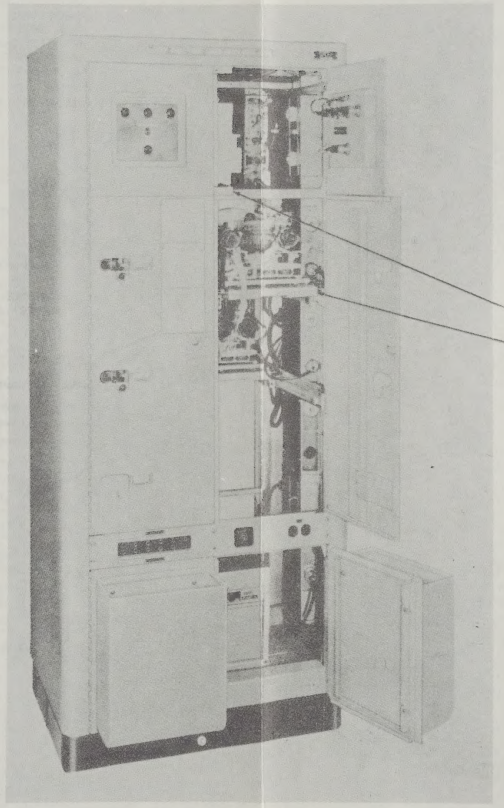

CENTER SUPPORT FRAME AND RELAY RACK SUPPORT ADJUSTMENTS

SLIDE AND SLIDING TRAY ADJUSTMENTS

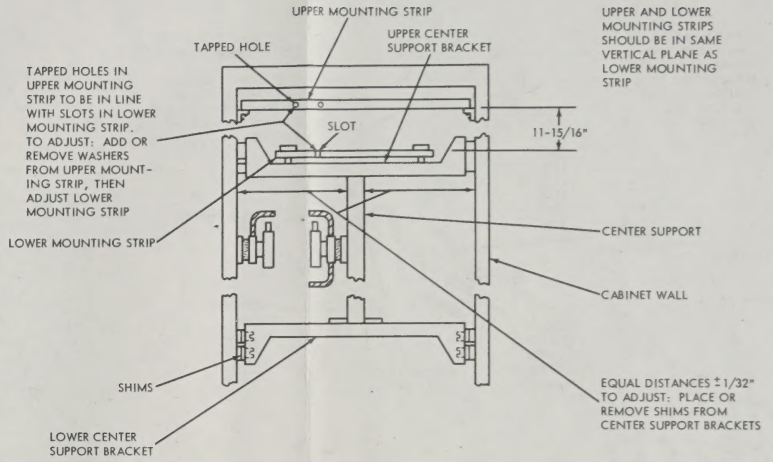
UPPER MOUNTING STRIP
UPPER CENTER SUPPORT BRACKET
TAPPED HOLE
UPPER AND LOWER MOUNTING STRIPS SHOULD BE IN SAME VERTICAL PLANE AS LOWER MOUNTING STRIP
TAPPED HOLES IN UPPER MOUNTING STRIP TO BE IN LINE WITH SLOTS IN LOWER MOUNTING STRIP.
TO ADJUST: ADD OR REMOVE WASHERS FROM UPPER MOUNTING STRIP, THEN ADJUST LOWER MOUNTING STRIP
SLOT
11-15/16"
LOWER MOUNTING STRIP
CENTER SUPPORT
CABINET WALL
SHIMS
EQUAL DISTANCES ±1/32"
TO ADJUST: PLACE OR REMOVE SHIMS FROM CENTER SUPPORT BRACKETS
LOWER CENTER SUPPORT BRACKET

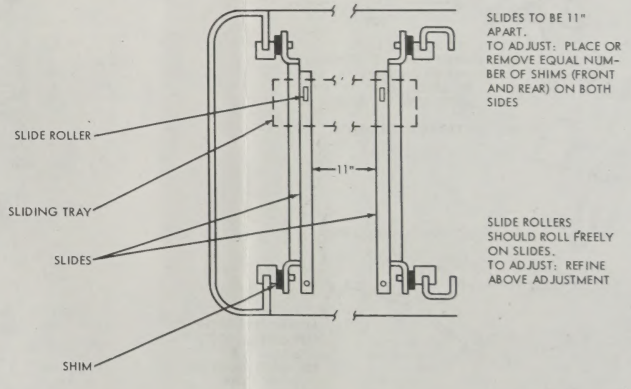
SLIDES TO BE 11" APART.
TO ADJUST: PLACE OR REMOVE EQUAL NUMBER OF SHIMS (FRONT AND REAR) ON BOTH SIDES
SLIDE ROLLER
11"
SLIDING TRAY
SLIDES
SLIDE ROLLERS SHOULD ROLL FREELY ON SLIDES.
TO ADJUST: REFINE ABOVE ADJUSTMENT
SHIM

Figure 7—3. Receiver Cabinet, Adjustments

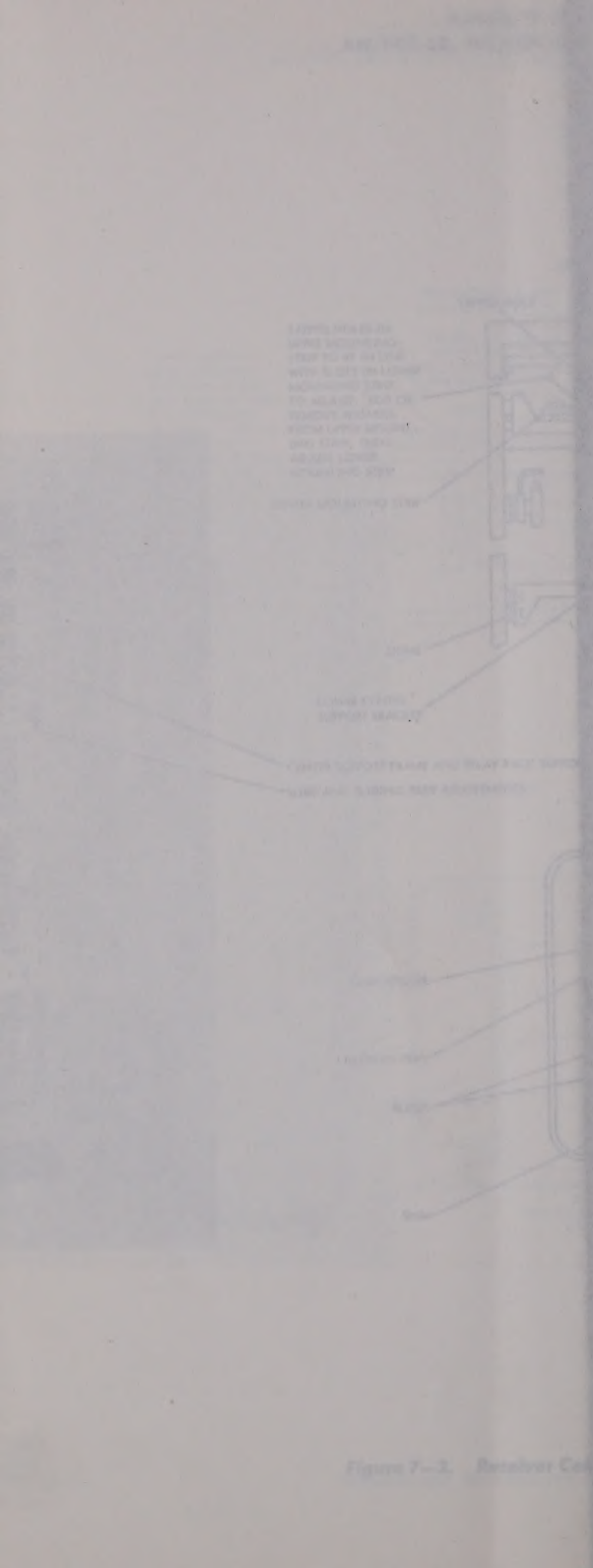

(14) TAPE CONTAINER AND TAPE-OUT CONTACTS.

(*a*) The stiffener of the tape-out contacts should be straight. To adjust, bend the stiffener.

(*b*) Using an eight-ounce scale and the tape-out lever held away from the contacts, it should require from two to three ounces to just move the short contact spring away from its stiffener. To adjust, bend the short contact spring.

(*c*) With the tape-out lever held away from the contacts, there should be 0.045 to 0.055 of an inch contact gap between the contact points. To adjust, bend the long contact spring.

(*d*) The tape-out lever should close the tape-out contacts when the end of the tape-out lever is within 5/16 to 3/8 of an inch (depending on office procedure) from the wood filler in the center of the tape container. To adjust, bend the tape-out lever.

(*e*) With the tape-out lever spring unhooked from the spring post, a 32-ounce scale hooked to the spring eye, and the tape-out lever held parallel to the bottom of the container, it should require 12 to 16 ounces to stretch the spring to position length. If it does not, replace the spring.

b. ELECTRICAL EQUIPMENT CABINET CY-1524/FGC.

(1) PATCH FRAME ASSEMBLY. — The patch frame assembly should be adjusted to ride smoothly on the guide rails, and the frame should lock securely in place with the thumbscrew mounted on the mounting frame. Adjust the guide rails, by means of the mounting screws, to be parallel with the side walls of the cabinet. (See figure 7-4.)

(2) CONTROL PANEL SHELF.—When the control panel shelf is pulled down, the shelf should be self-supporting. If the shelf rests on the control panel switch arms, adjust by means of the support frame screws.

(3) SLIDING SHELF. — The shelf that supports the numbering distributor-transmitters and base must slide freely and easily. The support should be parallel to the cabinet wall and base. Adjust by means of the screws holding the shelf to the cabinet.

(4) FRONT DOORS.—The front doors should be flush with the lower front edge of the cabinet. The striker plates are positioned to hold the doors in this position. Adjust the plates and screw them tight. The door latches are then positioned vertically until the doors latch properly when closed, yet open easily with the operator's fingers.

(5) REAR DOORS.—The doors are hung so that the outer surfaces are flush with the rear surface of the cabinet and the opening on top is not more than 1/16 of an inch. The strikers for the top and bottom latches should be positioned and tightened accordingly to hold the doors in this position. The door latches are positioned vertically to latch properly when closed, yet open easily with the operator's fingers.

(6) TAPE HOLDER FRAME ASSEMBLY.—The assembly should be tightened securely to the cabinet and the edges of the tape grids made parallel to the edges of the top of the cabinet.

c. ELECTRICAL EQUIPMENT CABINET CY-1522/FGC.

(1) BASE.—The adjustment of the base of the Monitor Cabinet is the same as that of the Receiver Cabinet. See figure 7-3 for the base adjustment.

(2) DISAPPEARING DOOR ADJUSTMENT.—The eight adjustments for the disappearing door should be taken in order as follows:

(*a*) DOOR RAIL.—Adjust the left and right rails so that they are separated by 19-7/16 inches (see figure 7-5). To adjust, place an equal number of shims between the two spacers on both sides of the cabinet.

(*b*) DOORS AND LEADERS.—The door and leaders are centered in the cabinet opening. With the door centered, adjust the guides so that a barely perceptible clearance exists between the guides and rails throughout the full travel of the door from front to rear. Lock the guides in position by means of the eccentrics.

(*c*) GUIDES AND RAILS.—There should be a slight clearance between the extrusions on the guides and guide rails throughout the entire travel. To adjust, bend the guides.

(*d*) DOOR ROLLERS.—With the door in a horizontal position and pushed in half way, adjust the rollers by means of the associated eccentric to give 1/16 of an inch clearance.

(*e*) DOOR STOP.—With the door in its closed position, there should be at least 1/16 of an inch clearance between the lug on the rail and stop. Adjust by positioning the stop.

(*f*) DISAPPEARING DOOR DETENT SPRING.—The door should not be loose in the closed position. Position the detent springs so that the detent studs are in engagement with the spring when the door is closed.

(*g*) DETENT STUDS.—With a 12-pound scale hooked in the center of the finger grip, it should require six to twelve pounds to open the door. To adjust, position the detent studs. Recheck the detent spring adjustment.

(3) REAR DOOR.

(*a*) STOP STRIP.—The stop strips should be mounted 7/32 of an inch from the rear face of the cabinet shell. Adjust by means of their mounting holes. When the doors are mounted, check to see that they are recessed 5/32 of an inch from the face of the shell.

NAVSHIPS 92378
AN/FGC-38, AN/FGC-38X, AN/FGC-39

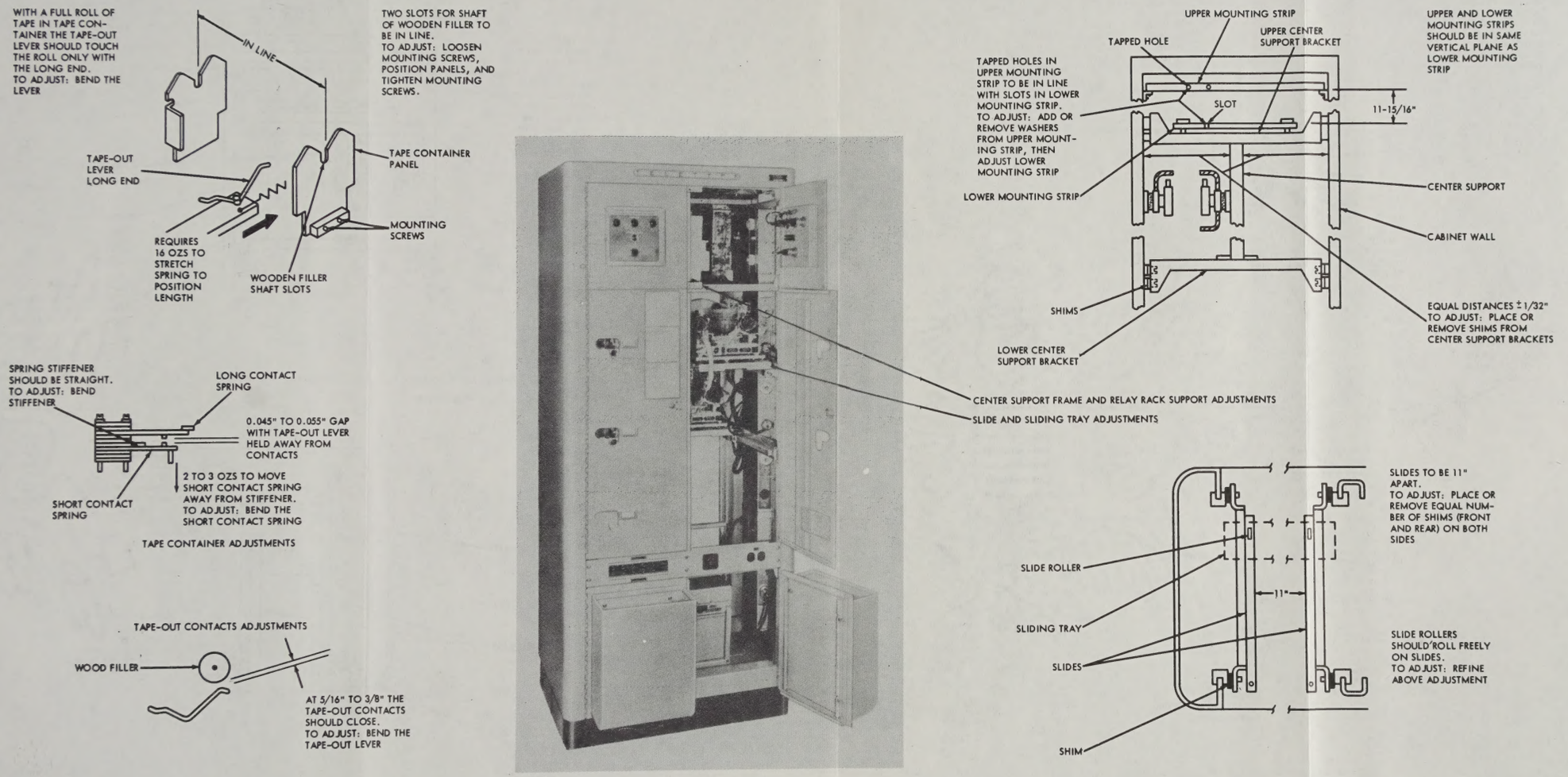
WITH A FULL ROLL OF TAPE IN TAPE CONTAINER THE TAPE-OUT LEVER SHOULD TOUCH THE ROLL ONLY WITH THE LONG END. TO ADJUST: BEND THE LEVER
IN LINE
TWO SLOTS FOR SHAFT OF WOODEN FILLER TO BE IN LINE. TO ADJUST: LOOSEN MOUNTING SCREWS, POSITION PANELS, AND TIGHTEN MOUNTING SCREWS.
TAPE-OUT LEVER LONG END
TAPE CONTAINER PANEL
MOUNTING SCREWS
REQUIRES 16 OZS TO STRETCH SPRING TO POSITION LENGTH
WOODEN FILLER SHAFT SLOTS
SPRING STIFFENER SHOULD BE STRAIGHT. TO ADJUST: BEND STIFFENER
LONG CONTACT SPRING
0.045" TO 0.055" GAP WITH TAPE-OUT LEVER HELD AWAY FROM CONTACTS
2 TO 3 OZS TO MOVE SHORT CONTACT SPRING AWAY FROM STIFFENER. TO ADJUST: BEND THE SHORT CONTACT SPRING
SHORT CONTACT SPRING
TAPE CONTAINER ADJUSTMENTS
TAPE-OUT CONTACTS ADJUSTMENTS
WOOD FILLER
AT 5/16" TO 3/8" THE TAPE-OUT CONTACTS SHOULD CLOSE. TO ADJUST: BEND THE TAPE-OUT LEVER
CONTACT CLOSING ADJUSTMENTS
UPPER MOUNTING STRIP
UPPER CENTER SUPPORT BRACKET
TAPPED HOLE
UPPER AND LOWER MOUNTING STRIPS SHOULD BE IN SAME VERTICAL PLANE AS LOWER MOUNTING STRIP
TAPPED HOLES IN UPPER MOUNTING STRIP TO BE IN LINE WITH SLOTS IN LOWER MOUNTING STRIP. TO ADJUST: ADD OR REMOVE WASHERS FROM UPPER MOUNTING STRIP, THEN ADJUST LOWER MOUNTING STRIP
SLOT
11-15/16"
LOWER MOUNTING STRIP
CENTER SUPPORT
CABINET WALL
SHIMS
EQUAL DISTANCES ±1/32" TO ADJUST: PLACE OR REMOVE SHIMS FROM CENTER SUPPORT BRACKETS
LOWER CENTER SUPPORT BRACKET
CENTER SUPPORT FRAME AND RELAY RACK SUPPORT ADJUSTMENTS
SLIDE AND SLIDING TRAY ADJUSTMENTS
SLIDES TO BE 11" APART. TO ADJUST: PLACE OR REMOVE EQUAL NUMBER OF SHIMS (FRONT AND REAR) ON BOTH SIDES
SLIDE ROLLER
11"
SLIDING TRAY
SLIDES
SLIDE ROLLERS SHOULD ROLL FREELY ON SLIDES. TO ADJUST: REFINE ABOVE ADJUSTMENT
SHIM

Figure 7—3. Receiver Cabinet, Adjustments

(14) TAPE CONTAINER AND TAPE-OUT CONTACTS.

(*a*) The stiffener of the tape-out contacts should be straight. To adjust, bend the stiffener.

(*b*) Using an eight-ounce scale and the tape-out lever held away from the contacts, it should require from two to three ounces to just move the short contact spring away from its stiffener. To adjust, bend the short contact spring.

(*c*) With the tape-out lever held away from the contacts, there should be 0.045 to 0.055 of an inch contact gap between the contact points. To adjust, bend the long contact spring.

(*d*) The tape-out lever should close the tape-out contacts when the end of the tape-out lever is within 5/16 to 3/8 of an inch (depending on office procedure) from the wood filler in the center of the tape container. To adjust, bend the tape-out lever.

(*e*) With the tape-out lever spring unhooked from the spring post, a 32-ounce scale hooked to the spring eye, and the tape-out lever held parallel to the bottom of the container, it should require 12 to 16 ounces to stretch the spring to position length. If it does not, replace the spring.

b. ELECTRICAL EQUIPMENT CABINET CY-1524/FGC.

(1) PATCH FRAME ASSEMBLY. – The patch frame assembly should be adjusted to ride smoothly on the guide rails, and the frame should lock securely in place with the thumbscrew mounted on the mounting frame. Adjust the guide rails, by means of the mounting screws, to be parallel with the side walls of the cabinet. (See figure 7-4.)

(2) CONTROL PANEL SHELF.—When the control panel shelf is pulled down, the shelf should be self-supporting. If the shelf rests on the control panel switch arms, adjust by means of the support frame screws.

(3) SLIDING SHELF. – The shelf that supports the numbering distributor-transmitters and base must slide freely and easily. The support should be parallel to the cabinet wall and base. Adjust by means of the screws holding the shelf to the cabinet.

(4) FRONT DOORS.—The front doors should be flush with the lower front edge of the cabinet. The striker plates are positioned to hold the doors in this position. Adjust the plates and screw them tight. The door latches are then positioned vertically until the doors latch properly when closed, yet open easily with the operator's fingers.

(5) REAR DOORS.—The doors are hung so that the outer surfaces are flush with the rear surface of the cabinet and the opening on top is not more than 1/16 of an inch. The strikers for the top and bottom latches should be positioned and tightened accordingly to hold the doors in this position. The door latches are positioned vertically to latch properly when closed, yet open easily with the operator's fingers.

(6) TAPE HOLDER FRAME ASSEMBLY.—The assembly should be tightened securely to the cabinet and the edges of the tape grids made parallel to the edges of the top of the cabinet.

c. ELECTRICAL EQUIPMENT CABINET CY-1522/FGC.

(1) BASE.—The adjustment of the base of the Monitor Cabinet is the same as that of the Receiver Cabinet. See figure 7-3 for the base adjustment.

(2) DISAPPEARING DOOR ADJUSTMENT.—The eight adjustments for the disappearing door should be taken in order as follows:

(*a*) DOOR RAIL.—Adjust the left and right rails so that they are separated by 19-7/16 inches (see figure 7-5). To adjust, place an equal number of shims between the two spacers on both sides of the cabinet.

(*b*) DOORS AND LEADERS.—The door and leaders are centered in the cabinet opening. With the door centered, adjust the guides so that a barely perceptible clearance exists between the guides and rails throughout the full travel of the door from front to rear. Lock the guides in position by means of the eccentrics.

(*c*) GUIDES AND RAILS.—There should be a slight clearance between the extrusions on the guides and guide rails throughout the entire travel. To adjust, bend the guides.

(*d*) DOOR ROLLERS.—With the door in a horizontal position and pushed in half way, adjust the rollers by means of the associated eccentric to give 1/16 of an inch clearance.

(*e*) DOOR STOP.—With the door in its closed position, there should be at least 1/16 of an inch clearance between the lug on the rail and stop. Adjust by positioning the stop.

(*f*) DISAPPEARING DOOR DETENT SPRING.—The door should not be loose in the closed position. Position the detent springs so that the detent studs are in engagement with the spring when the door is closed.

(*g*) DETENT STUDS.—With a 12-pound scale hooked in the center of the finger grip, it should require six to twelve pounds to open the door. To adjust, position the detent studs. Recheck the detent spring adjustment.

(3) REAR DOOR.

(*a*) STOP STRIP.—The stop strips should be mounted 7/32 of an inch from the rear face of the cabinet shell. Adjust by means of their mounting holes. When the doors are mounted, check to see that they are recessed 5/32 of an inch from the face of the shell.

(*b*) REAR DOOR LATCH.—When the door is closed, it should be held firmly against the stop strips. Adjust by bending the latches at the top and bottom of the cabinet to obtain a friction type of engagement of the latching strips and latches.

(4) LOWER FRONT HINGED DOOR.

(*a*) STOP STRIP.—Adjust the stop strip as in (3)(*a*) above.

(*b*) STUD.—Adjust the stud as in (2)(*g*) above.

(5) SLIDE AND TRAY.

(*a*) SIDE PANEL STRIP. — Space the slides which are mounted to the side panel strips to approximately 19-9/32 inches by placing an equal number of shims between the nuts on the cabinet side panels and the side panel strips.

(*b*) SLIDING TRAY.—The slide roller mounted on the sliding tray should roll freely on the slide track. To adjust, refine the adjustment of (5) (*a*) above.

(6) SHELF PLATE.—The mounting plate assembled onto the sliding tray should be adjusted so that there is equal clearance on the right, left, and front sides of the mounting plate. To adjust, loosen the center mounting screws of the vibration mounts *under* the mounting plate and position the mounting plate with respect to the sliding tray. Tighten the mounting screws.

(7) TAPE REEL TAPE-OUT CONTACT LEVER.

(*a*) Swing the tape reel tape-out contact lever against the side of the tape reel container. The curve of the contact lever should be such as to permit the greatest amount of the curved surface on the contact lever to touch the adjacent surface of the container. To adjust, bend the contact lever.

(*b*) The contact lever should clear the indented edge of the tape reel container at all times. To adjust, loosen the nuts on the tape reel tape-out lever bracket mounting screws and position the bracket. Tighten the nuts.

(8) TAPE REEL TAPE-OUT CONTACTS.

(*a*) The stiffener of the tape reel tape-out contact should be straight. To adjust, bend the stiffener.

(*b*) With the contact lever held away from the contact, hook an eight-ounce scale at the contact point of the short contact spring and pull in a horizontal direction. It should require two to three ounces to just move the short contact spring away from its stiffener. To adjust, bend the short contact spring.

(*c*) With the contact lever held away from the contacts, there should be 0.015 to 0.020 of an inch contact gap between the contact points. To adjust, bend the long contact spring.

(9) TAPE REEL TAPE-OUT ADJUSTING SCREW. — The tape reel tape-out adjusting screw should close the tape-out contacts when the end of the tape-out contact lever is within 5/16 to 3/8 of an inch of the wood filler in the center of the reel. To adjust, loosen the lock nut and position the adjusting screw.

(10) TAPE REEL TAPE-OUT CONTACT LEVER SPRING TENSION.—Unhook the tape reel tape-out contact lever spring from the spring post on the lever and hook a 32-ounce scale in the eye of the spring. With the tape reel tape-out lever held so that the curved portion is touching the curved part of the tape reel container, it should require seven to nine ounces to stretch the spring to its position length. If the pull is not correct, replace the spring.

d. REELING MACHINE RL-173/FGC.

(1) CLUTCH SHAFT ALIGNMENT.

(*a*) With the tape reel in position, there should be not more than 0.010 of an inch play at any point of engagement between the drive gear and the pinion gear. To adjust, loosen the bearing plate mounting screws (accessible through the holes in the intermediate gear), position the bearing, and tighten the mounting screws.

(*b*) The intermediate gear should be approximately parallel to the outer plate and mesh approximately in the middle of the drive shaft gear (see figure 7-6). To adjust, loosen the two screws holding the bracket mounting the intermediate gear and position the bracket. Tighten the mounting screws.

(2) DRIVE SHAFT END PLAY.—To check the adjustment of the drive shaft end play, disengage the driven gear from the motor pinion. The motor drive shaft should have not more than 0.010 of an inch end play and should rotate freely without binding. To adjust, see that the motor drive shaft bearing lock nut is tight and add shims if necessary.

(3) DRIVE SHAFT GEAR.—There should be not more than 0.010 of an inch end play at any point of engagement between the drive shaft gear and the intermediate gear. To adjust, loosen the two mounting screws on the bracket mounting the motor drive shaft gear and position the bracket. Tighten the mounting screws.

(4) MOTOR POSITION.—With the driven gear in mesh with the motor pinion, the lateral alignment of the motor pinion should be such that the center line of the driven gear coincides with the vertical line through the center of the motor pinion. Also, there should be a barely perceptible amount of backlash between the motor pinion and the highest point of the driven gear. Check for one complete revolution of the driven gear. To adjust, loosen the six motor bracket mounting screws, and position the bracket laterally for proper gear alignment. Tighten the mounting screws. Loosen the four motor mounting screws and position the motor on the motor bracket to obtain proper back-

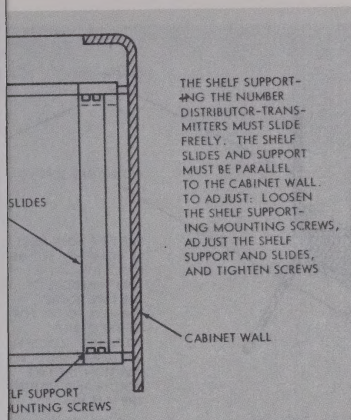
THE SHELF SUPPORTING THE NUMBER DISTRIBUTOR-TRANSMITTERS MUST SLIDE FREELY. THE SHELF SLIDES AND SUPPORT MUST BE PARALLEL TO THE CABINET WALL. TO ADJUST: LOOSEN THE SHELF SUPPORTING MOUNTING SCREWS, ADJUST THE SHELF SUPPORT AND SLIDES, AND TIGHTEN SCREWS
SLIDES
CABINET WALL
LF SUPPORT
UNTING SCREWS

TMENT

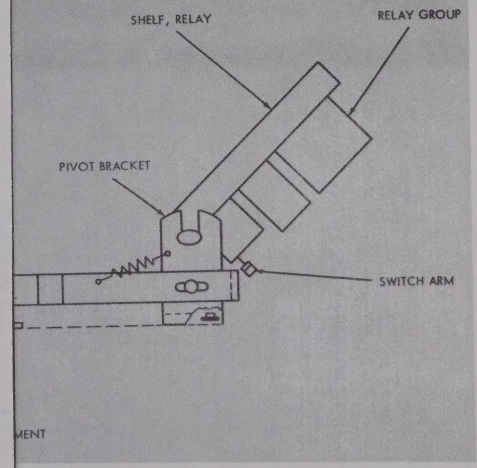
SHELF, RELAY
RELAY GROUP
PIVOT BRACKET
SWITCH ARM

MENT

(*b*) REAR DOOR LATCH.—When the door is closed, it should be held firmly against the stop strips. Adjust by bending the latches at the top and bottom of the cabinet to obtain a friction type of engagement of the latching strips and latches.

(4) LOWER FRONT HINGED DOOR.

(*a*) STOP STRIP.—Adjust the stop strip as in (3)(*a*) above.

(*b*) STUD.—Adjust the stud as in (2)(*g*) above.

(5) SLIDE AND TRAY.

(*a*) SIDE PANEL STRIP. — Space the slides which are mounted to the side panel strips to approximately 19-9/32 inches by placing an equal number of shims between the nuts on the cabinet side panels and the side panel strips.

(*b*) SLIDING TRAY.—The slide roller mounted on the sliding tray should roll freely on the slide track. To adjust, refine the adjustment of (5) (*a*) above.

(6) SHELF PLATE.—The mounting plate assembled onto the sliding tray should be adjusted so that there is equal clearance on the right, left, and front sides of the mounting plate. To adjust, loosen the center mounting screws of the vibration mounts *under* the mounting plate and position the mounting plate with respect to the sliding tray. Tighten the mounting screws.

(7) TAPE REEL TAPE-OUT CONTACT LEVER.

(*a*) Swing the tape reel tape-out contact lever against the side of the tape reel container. The curve of the contact lever should be such as to permit the greatest amount of the curved surface on the contact lever to touch the adjacent surface of the container. To adjust, bend the contact lever.

(*b*) The contact lever should clear the indented edge of the tape reel container at all times. To adjust, loosen the nuts on the tape reel tape-out lever bracket mounting screws and position the bracket. Tighten the nuts.

(8) TAPE REEL TAPE-OUT CONTACTS.

(*a*) The stiffener of the tape reel tape-out contact should be straight. To adjust, bend the stiffener.

(*b*) With the contact lever held away from the contact, hook an eight-ounce scale at the contact point of the short contact spring and pull in a horizontal direction. It should require two to three ounces to just move the short contact spring away from its stiffener. To adjust, bend the short contact spring.

(*c*) With the contact lever held away from the contacts, there should be 0.015 to 0.020 of an inch contact gap between the contact points. To adjust, bend the long contact spring.

(9) TAPE REEL TAPE-OUT ADJUSTING SCREW. — The tape reel tape-out adjusting screw should close the tape-out contacts when the end of the tape-out contact lever is within 5/16 to 3/8 of an inch of the wood filler in the center of the reel. To adjust, loosen the lock nut and position the adjusting screw.

(10) TAPE REEL TAPE-OUT CONTACT LEVER SPRING TENSION.—Unhook the tape reel tape-out contact lever spring from the spring post on the lever and hook a 32-ounce scale in the eye of the spring. With the tape reel tape-out lever held so that the curved portion is touching the curved part of the tape reel container, it should require seven to nine ounces to stretch the spring to its position length. If the pull is not correct, replace the spring.

d. REELING MACHINE RL-173/FGC.

(1) CLUTCH SHAFT ALIGNMENT.

(*a*) With the tape reel in position, there should be not more than 0.010 of an inch play at any point of engagement between the drive gear and the pinion gear. To adjust, loosen the bearing plate mounting screws (accessible through the holes in the intermediate gear), position the bearing, and tighten the mounting screws.

(*b*) The intermediate gear should be approximately parallel to the outer plate and mesh approximately in the middle of the drive shaft gear (see figure 7-6). To adjust, loosen the two screws holding the bracket mounting the intermediate gear and position the bracket. Tighten the mounting screws.

(2) DRIVE SHAFT END PLAY.—To check the adjustment of the drive shaft end play, disengage the driven gear from the motor pinion. The motor drive shaft should have not more than 0.010 of an inch end play and should rotate freely without binding. To adjust, see that the motor drive shaft bearing lock nut is tight and add shims if necessary.

(3) DRIVE SHAFT GEAR.—There should be not more than 0.010 of an inch end play at any point of engagement between the drive shaft gear and the intermediate gear. To adjust, loosen the two mounting screws on the bracket mounting the motor drive shaft gear and position the bracket. Tighten the mounting screws.

(4) MOTOR POSITION.—With the driven gear in mesh with the motor pinion, the lateral alignment of the motor pinion should be such that the center line of the driven gear coincides with the vertical line through the center of the motor pinion. Also, there should be a barely perceptible amount of backlash between the motor pinion and the highest point of the driven gear. Check for one complete revolution of the driven gear. To adjust, loosen the six motor bracket mounting screws, and position the bracket laterally for proper gear alignment. Tighten the mounting screws. Loosen the four motor mounting screws and position the motor on the motor bracket to obtain proper back-

NAVSHIPS 92378 AN/FGC-38, AN/FGC-38X, AN/FGC-39

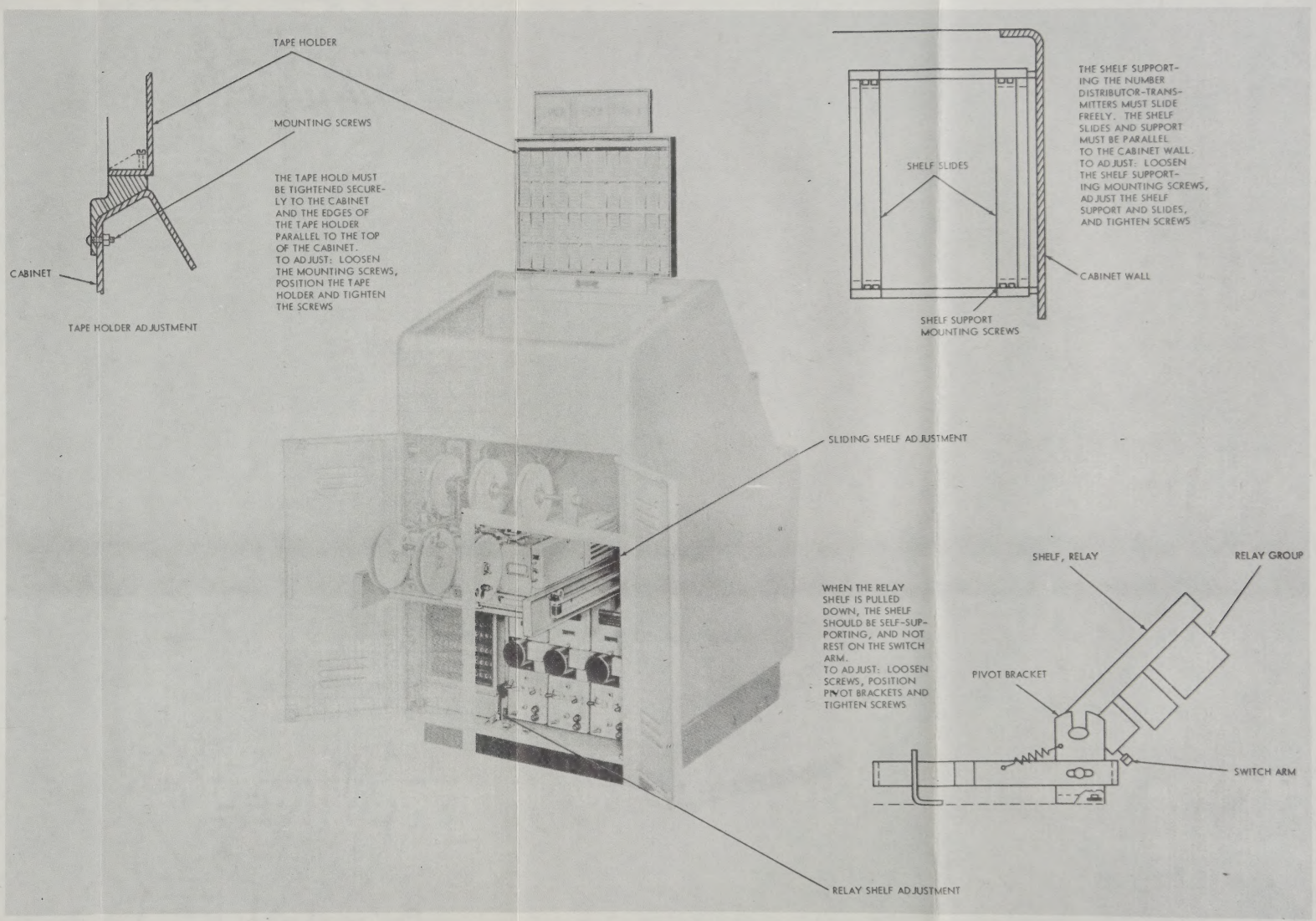
TAPE HOLDER
MOUNTING SCREWS
THE TAPE HOLD MUST BE TIGHTENED SECURELY TO THE CABINET AND THE EDGES OF THE TAPE HOLDER PARALLEL TO THE TOP OF THE CABINET. TO ADJUST: LOOSEN THE MOUNTING SCREWS, POSITION THE TAPE HOLDER AND TIGHTEN THE SCREWS
CABINET
TAPE HOLDER ADJUSTMENT
THE SHELF SUPPORTING THE NUMBER DISTRIBUTOR-TRANSMITTERS MUST SLIDE FREELY. THE SHELF SLIDES AND SUPPORT MUST BE PARALLEL TO THE CABINET WALL. TO ADJUST: LOOSEN THE SHELF SUPPORTING MOUNTING SCREWS, ADJUST THE SHELF SUPPORT AND SLIDES, AND TIGHTEN SCREWS
SHELF SLIDES
CABINET WALL
SHELF SUPPORT MOUNTING SCREWS
SLIDING SHELF ADJUSTMENT
SHELF, RELAY
RELAY GROUP
WHEN THE RELAY SHELF IS PULLED DOWN, THE SHELF SHOULD BE SELF-SUPPORTING, AND NOT REST ON THE SWITCH ARM. TO ADJUST: LOOSEN SCREWS, POSITION PIVOT BRACKETS AND TIGHTEN SCREWS
PIVOT BRACKET
SWITCH ARM
RELAY SHELF ADJUSTMENT

Figure 7—4. Transmitter Cabinet, Adjustments

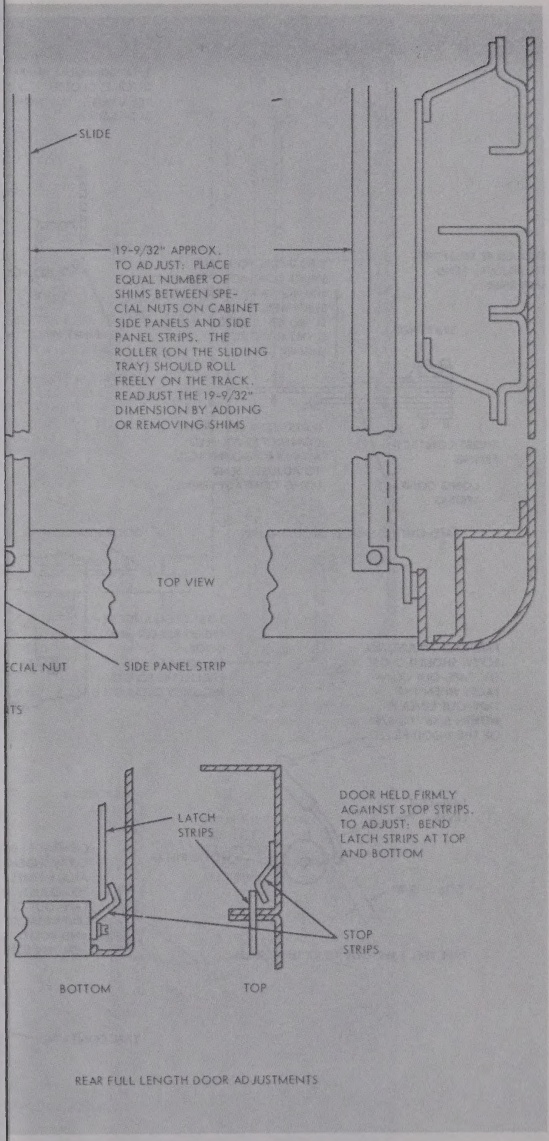
SLIDE
19-9/32" APPROX.
TO ADJUST: PLACE EQUAL NUMBER OF SHIMS BETWEEN SPECIAL NUTS ON CABINET SIDE PANELS AND SIDE PANEL STRIPS. THE ROLLER (ON THE SLIDING TRAY) SHOULD ROLL FREELY ON THE TRACK. READJUST THE 19-9/32" DIMENSION BY ADDING OR REMOVING SHIMS
TOP VIEW
ECIAL NUT
SIDE PANEL STRIP
TS
LATCH STRIPS
DOOR HELD FIRMLY AGAINST STOP STRIPS. TO ADJUST: BEND LATCH STRIPS AT TOP AND BOTTOM
STOP STRIPS
BOTTOM
TOP

REAR FULL LENGTH DOOR ADJUSTMENTS

NAVSHIPS 92378
AN/FGC-38, AN/FGC-38X, AN/FGC-39

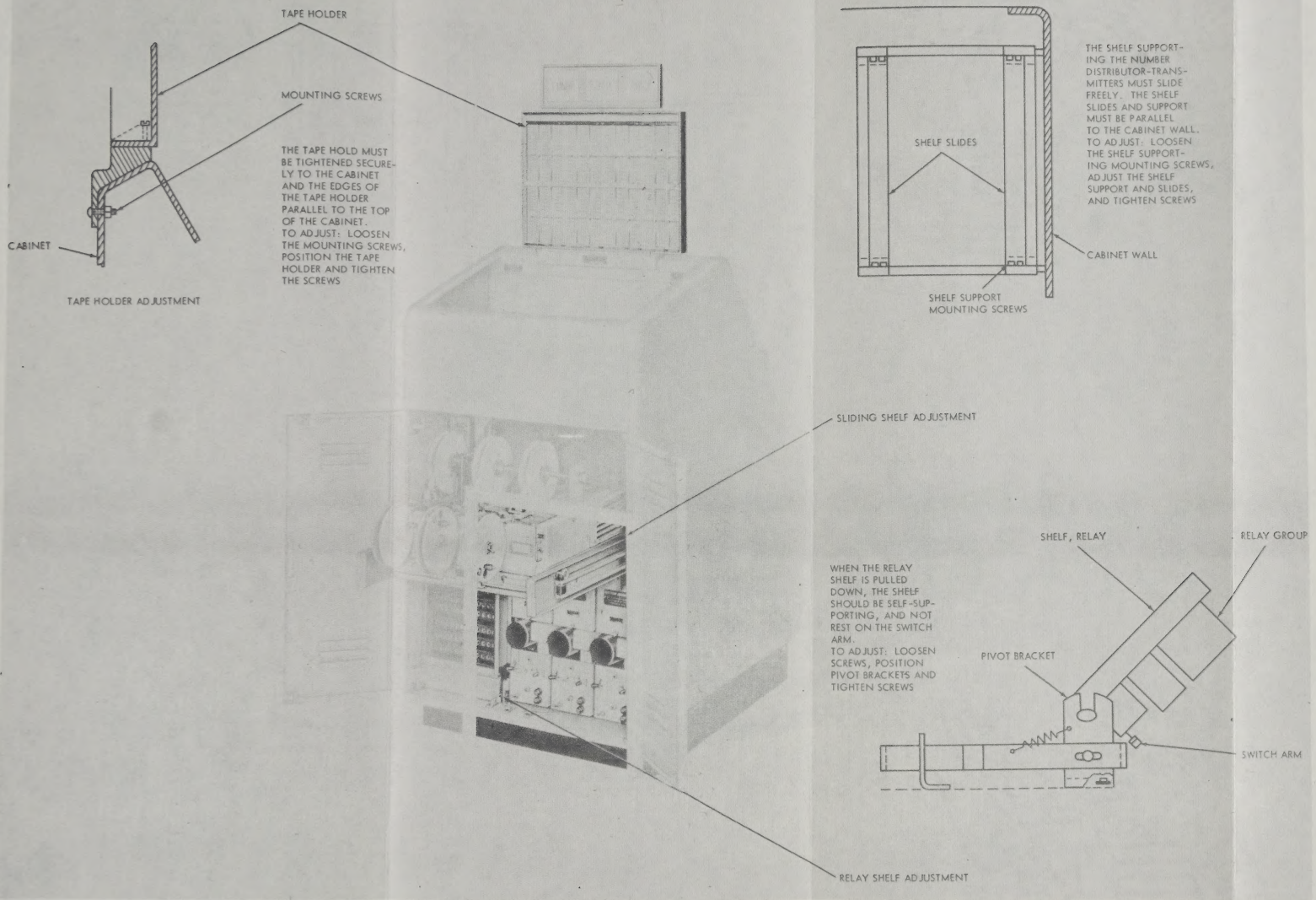
TAPE HOLDER
MOUNTING SCREWS
THE TAPE HOLD MUST BE TIGHTENED SECURELY TO THE CABINET AND THE EDGES OF THE TAPE HOLDER PARALLEL TO THE TOP OF THE CABINET. TO ADJUST: LOOSEN THE MOUNTING SCREWS, POSITION THE TAPE HOLDER AND TIGHTEN THE SCREWS
CABINET
TAPE HOLDER ADJUSTMENT
THE SHELF SUPPORTING THE NUMBER DISTRIBUTOR-TRANSMITTERS MUST SLIDE FREELY. THE SHELF SLIDES AND SUPPORT MUST BE PARALLEL TO THE CABINET WALL. TO ADJUST: LOOSEN THE SHELF SUPPORTING MOUNTING SCREWS, ADJUST THE SHELF SUPPORT AND SLIDES, AND TIGHTEN SCREWS
SHELF SLIDES
CABINET WALL
SHELF SUPPORT MOUNTING SCREWS
SLIDING SHELF ADJUSTMENT
SHELF, RELAY
RELAY GROUP
WHEN THE RELAY SHELF IS PULLED DOWN, THE SHELF SHOULD BE SELF-SUPPORTING, AND NOT REST ON THE SWITCH ARM. TO ADJUST: LOOSEN SCREWS, POSITION PIVOT BRACKETS AND TIGHTEN SCREWS
PIVOT BRACKET
SWITCH ARM
RELAY SHELF ADJUSTMENT

Figure 7—4. Transmitter Cabinet, Adjustments

NAVSHIPS 92378
AN/FGC-38, AN/FGC-38X, AN/FGC-39

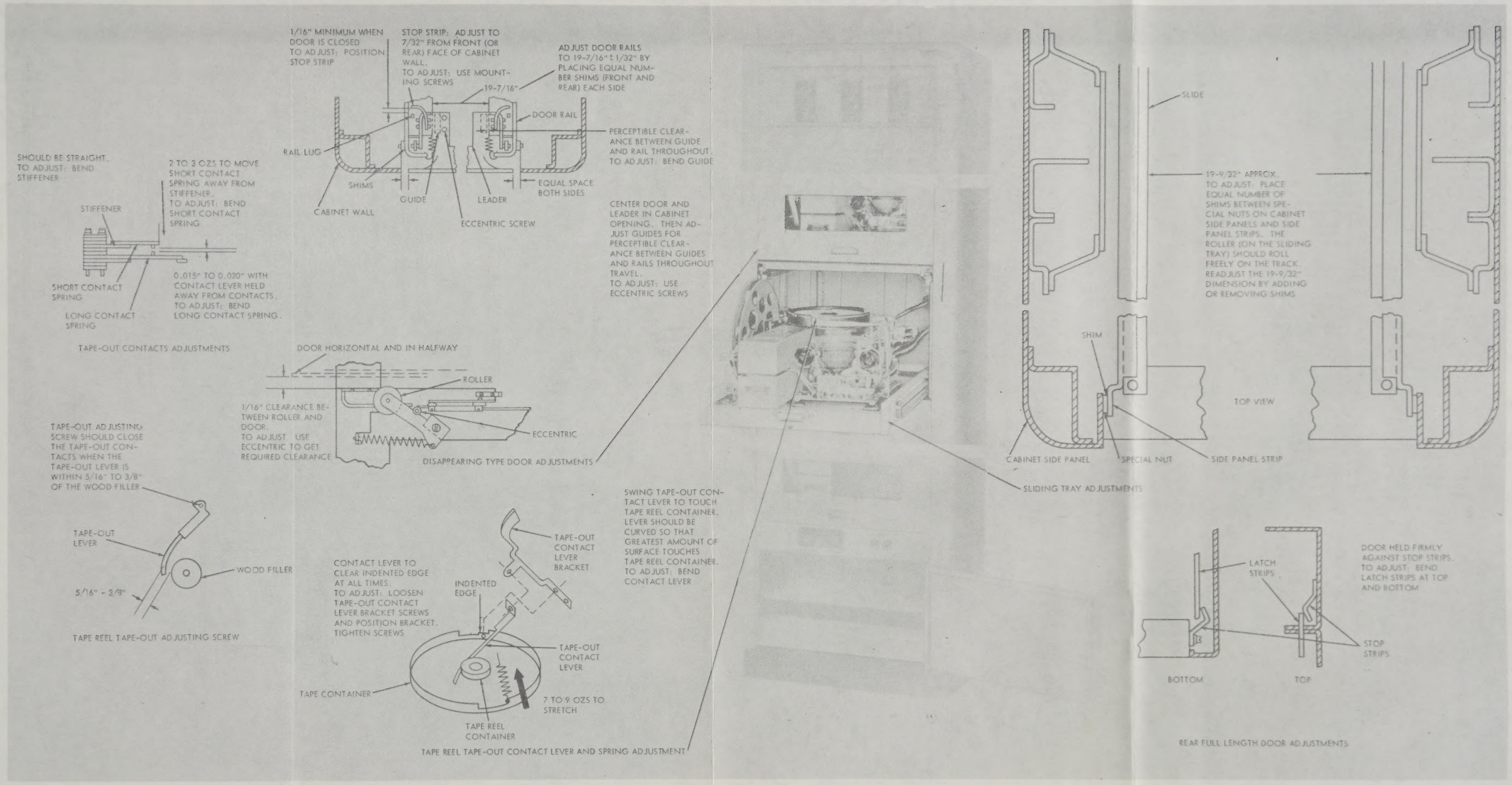
1/16" MINIMUM WHEN DOOR IS CLOSED TO ADJUST: POSITION STOP STRIP
STOP STRIP: ADJUST TO 7/32" FROM FRONT (OR REAR) FACE OF CABINET WALL. TO ADJUST: USE MOUNTING SCREWS
ADJUST DOOR RAILS TO 19-7/16" ± 1/32" BY PLACING EQUAL NUMBER SHIMS (FRONT AND REAR) EACH SIDE
19-7/16"
DOOR RAIL
PERCEPTIBLE CLEARANCE BETWEEN GUIDE AND RAIL THROUGHOUT. TO ADJUST: BEND GUIDE
RAIL LUG
SHIMS
GUIDE
LEADER
EQUAL SPACE BOTH SIDES
CABINET WALL
ECCENTRIC SCREW
CENTER DOOR AND LEADER IN CABINET OPENING. THEN ADJUST GUIDES FOR PERCEPTIBLE CLEARANCE BETWEEN GUIDES AND RAILS THROUGHOUT TRAVEL. TO ADJUST: USE ECCENTRIC SCREWS
SHOULD BE STRAIGHT. TO ADJUST: BEND STIFFENER
2 TO 3 OZS TO MOVE SHORT CONTACT SPRING AWAY FROM STIFFENER. TO ADJUST: BEND SHORT CONTACT SPRING
STIFFENER
SHORT CONTACT SPRING
LONG CONTACT SPRING
0.015" TO 0.020" WITH CONTACT LEVER HELD AWAY FROM CONTACTS. TO ADJUST: BEND LONG CONTACT SPRING.
TAPE-OUT CONTACTS ADJUSTMENTS
DOOR HORIZONTAL AND IN HALFWAY
ROLLER
1/16" CLEARANCE BETWEEN ROLLER AND DOOR. TO ADJUST: USE ECCENTRIC TO GET REQUIRED CLEARANCE
ECCENTRIC
DISAPPEARING TYPE DOOR ADJUSTMENTS
TAPE-OUT ADJUSTING SCREW SHOULD CLOSE THE TAPE-OUT CONTACTS WHEN THE TAPE-OUT LEVER IS WITHIN 5/16" TO 3/8" OF THE WOOD FILLER
TAPE-OUT LEVER
WOOD FILLER
5/16" - 3/8"
TAPE REEL TAPE-OUT ADJUSTING SCREW
SWING TAPE-OUT CONTACT LEVER TO TOUCH TAPE REEL CONTAINER. LEVER SHOULD BE CURVED SO THAT GREATEST AMOUNT OF SURFACE TOUCHES TAPE REEL CONTAINER. TO ADJUST: BEND CONTACT LEVER
TAPE-OUT CONTACT LEVER BRACKET
CONTACT LEVER TO CLEAR INDENTED EDGE AT ALL TIMES. TO ADJUST: LOOSEN TAPE-OUT CONTACT LEVER BRACKET SCREWS AND POSITION BRACKET. TIGHTEN SCREWS
INDENTED EDGE
TAPE-OUT CONTACT LEVER
TAPE CONTAINER
7 TO 9 OZS TO STRETCH
TAPE REEL CONTAINER
TAPE REEL TAPE-OUT CONTACT LEVER AND SPRING ADJUSTMENT
SLIDE
19-9/32" APPROX. TO ADJUST: PLACE EQUAL NUMBER OF SHIMS BETWEEN SPECIAL NUTS ON CABINET SIDE PANELS AND SIDE PANEL STRIPS. THE ROLLER (ON THE SLIDING TRAY) SHOULD ROLL FREELY ON THE TRACK. READJUST THE 19-9/32" DIMENSION BY ADDING OR REMOVING SHIMS
SHIM
TOP VIEW
CABINET SIDE PANEL
SPECIAL NUT
SIDE PANEL STRIP
SLIDING TRAY ADJUSTMENTS
LATCH STRIPS
DOOR HELD FIRMLY AGAINST STOP STRIPS. TO ADJUST: BEND LATCH STRIPS AT TOP AND BOTTOM
STOP STRIPS
BOTTOM
TOP
REAR FULL LENGTH DOOR ADJUSTMENTS

Figure 7—5. Monitor Cabinet, Adjustments

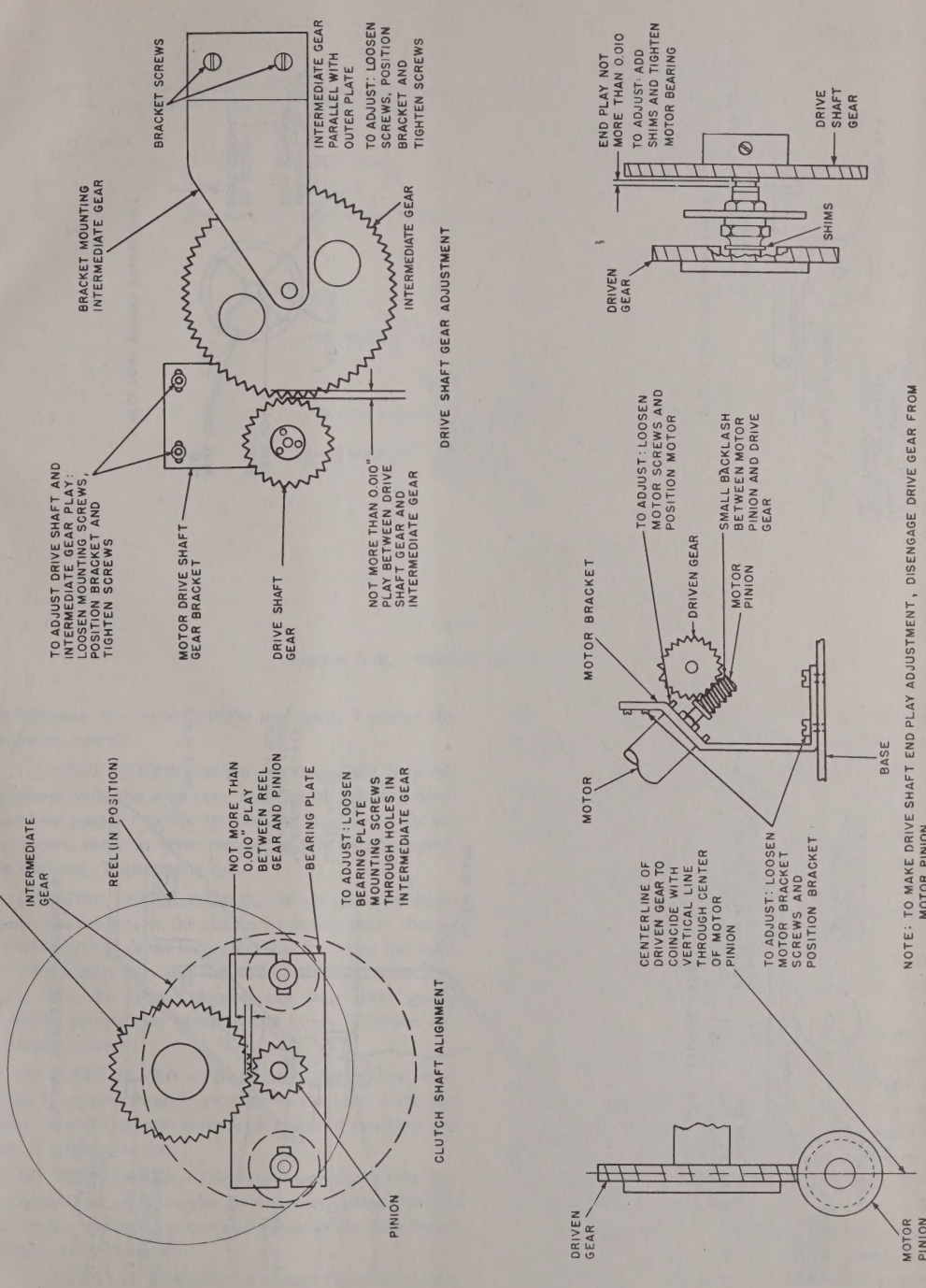
REEL DRIVE GEAR
INTERMEDIATE GEAR
REEL (IN POSITION)
NOT MORE THAN 0.010" PLAY BETWEEN REEL GEAR AND PINION
BEARING PLATE
TO ADJUST: LOOSEN BEARING PLATE MOUNTING SCREWS THROUGH HOLES IN INTERMEDIATE GEAR
PINION
CLUTCH SHAFT ALIGNMENT
BRACKET SCREWS
BRACKET MOUNTING INTERMEDIATE GEAR
INTERMEDIATE GEAR PARALLEL WITH OUTER PLATE
TO ADJUST: LOOSEN SCREWS, POSITION BRACKET AND TIGHTEN SCREWS
INTERMEDIATE GEAR
TO ADJUST DRIVE SHAFT AND INTERMEDIATE GEAR PLAY: LOOSEN MOUNTING SCREWS, POSITION BRACKET AND TIGHTEN SCREWS
MOTOR DRIVE SHAFT GEAR BRACKET
DRIVE SHAFT GEAR
NOT MORE THAN 0.010" PLAY BETWEEN DRIVE SHAFT GEAR AND INTERMEDIATE GEAR
DRIVE SHAFT GEAR ADJUSTMENT
END PLAY NOT MORE THAN 0.010
TO ADJUST: ADD SHIMS AND TIGHTEN MOTOR BEARING
DRIVE SHAFT GEAR
SHIMS
DRIVEN GEAR
MOTOR BRACKET
TO ADJUST: LOOSEN MOTOR SCREWS AND POSITION MOTOR
DRIVEN GEAR
SMALL BACKLASH BETWEEN MOTOR PINION AND DRIVE GEAR
MOTOR PINION
MOTOR
BASE
CENTERLINE OF DRIVEN GEAR TO COINCIDE WITH VERTICAL LINE THROUGH CENTER OF MOTOR PINION
TO ADJUST: LOOSEN MOTOR BRACKET SCREWS AND POSITION BRACKET
NOTE: TO MAKE DRIVE SHAFT END PLAY ADJUSTMENT, DISENGAGE DRIVE GEAR FROM MOTOR PINION
MOTOR POSITION AND DRIVE SHAFT END PLAY ADJUSTMENT
DRIVEN GEAR
MOTOR PINION

Figure 7—6. Reeling Machine Adjustments

NAVSHIPS 92378
AN/FGC-38, AN/FGC-38X, AN/FGC-39

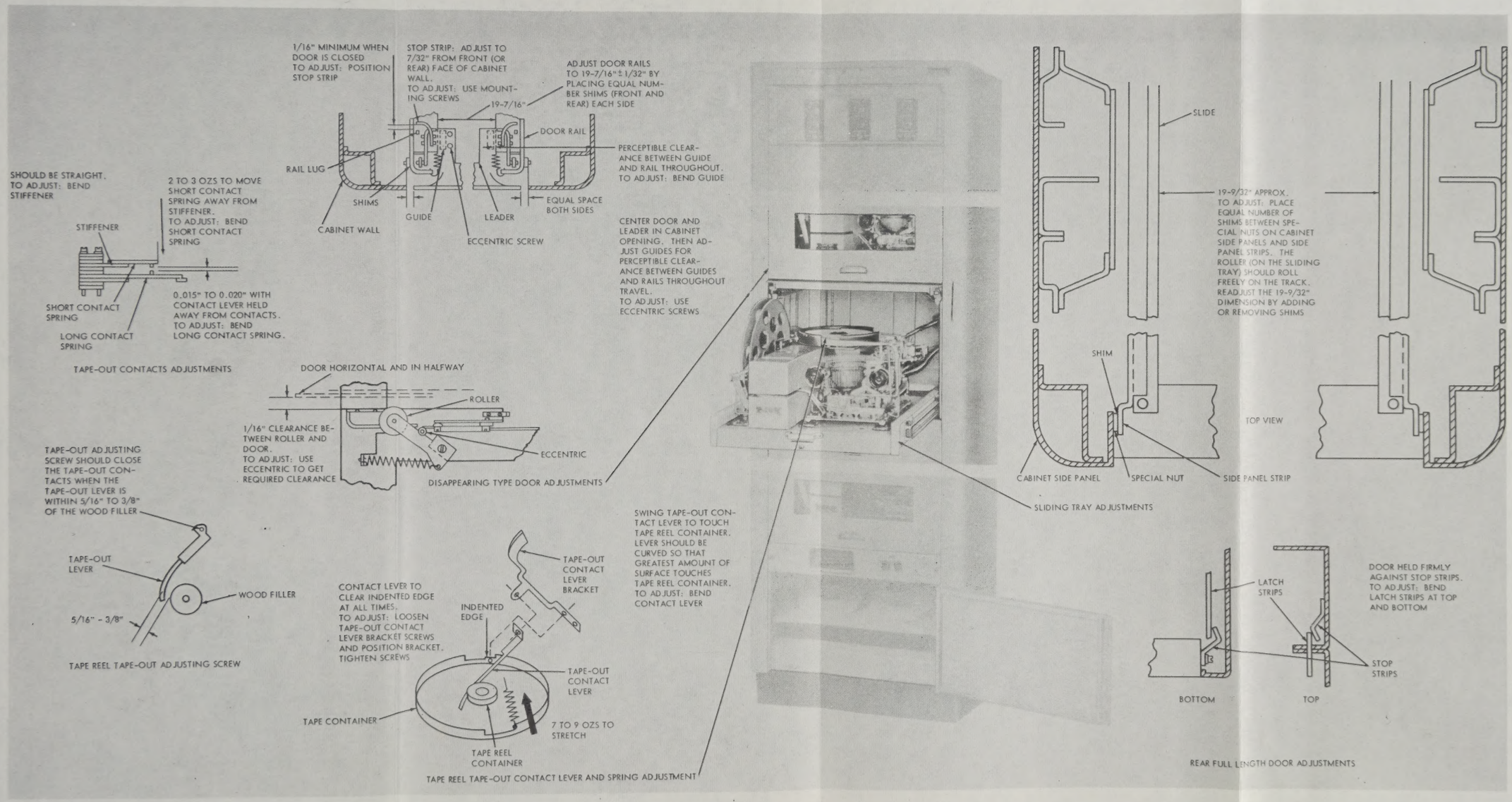
1/16" MINIMUM WHEN DOOR IS CLOSED TO ADJUST: POSITION STOP STRIP
STOP STRIP: ADJUST TO 7/32" FROM FRONT (OR REAR) FACE OF CABINET WALL. TO ADJUST: USE MOUNTING SCREWS
ADJUST DOOR RAILS TO 19-7/16" ± 1/32" BY PLACING EQUAL NUMBER SHIMS (FRONT AND REAR) EACH SIDE
19-7/16"
DOOR RAIL
PERCEPTIBLE CLEARANCE BETWEEN GUIDE AND RAIL THROUGHOUT. TO ADJUST: BEND GUIDE
RAIL LUG
SHIMS
GUIDE
LEADER
EQUAL SPACE BOTH SIDES
CABINET WALL
ECCENTRIC SCREW
SHOULD BE STRAIGHT. TO ADJUST: BEND STIFFENER
2 TO 3 OZS TO MOVE SHORT CONTACT SPRING AWAY FROM STIFFENER. TO ADJUST: BEND SHORT CONTACT SPRING
STIFFENER
SHORT CONTACT SPRING
LONG CONTACT SPRING
0.015" TO 0.020" WITH CONTACT LEVER HELD AWAY FROM CONTACTS. TO ADJUST: BEND LONG CONTACT SPRING.
TAPE-OUT CONTACTS ADJUSTMENTS
CENTER DOOR AND LEADER IN CABINET OPENING. THEN ADJUST GUIDES FOR PERCEPTIBLE CLEARANCE BETWEEN GUIDES AND RAILS THROUGHOUT TRAVEL. TO ADJUST: USE ECCENTRIC SCREWS
DOOR HORIZONTAL AND IN HALFWAY
ROLLER
1/16" CLEARANCE BETWEEN ROLLER AND DOOR. TO ADJUST: USE ECCENTRIC TO GET REQUIRED CLEARANCE
ECCENTRIC
DISAPPEARING TYPE DOOR ADJUSTMENTS
TAPE-OUT ADJUSTING SCREW SHOULD CLOSE THE TAPE-OUT CONTACTS WHEN THE TAPE-OUT LEVER IS WITHIN 5/16" TO 3/8" OF THE WOOD FILLER
TAPE-OUT LEVER
WOOD FILLER
5/16" - 3/8"
TAPE REEL TAPE-OUT ADJUSTING SCREW
SWING TAPE-OUT CONTACT LEVER TO TOUCH TAPE REEL CONTAINER. LEVER SHOULD BE CURVED SO THAT GREATEST AMOUNT OF SURFACE TOUCHES TAPE REEL CONTAINER. TO ADJUST: BEND CONTACT LEVER
CONTACT LEVER TO CLEAR INDENTED EDGE AT ALL TIMES. TO ADJUST: LOOSEN TAPE-OUT CONTACT LEVER BRACKET SCREWS AND POSITION BRACKET. TIGHTEN SCREWS
TAPE-OUT CONTACT LEVER BRACKET
INDENTED EDGE
TAPE-OUT CONTACT LEVER
TAPE CONTAINER
7 TO 9 OZS TO STRETCH
TAPE REEL CONTAINER
TAPE REEL TAPE-OUT CONTACT LEVER AND SPRING ADJUSTMENT
SLIDE
19-9/32" APPROX. TO ADJUST: PLACE EQUAL NUMBER OF SHIMS BETWEEN SPECIAL NUTS ON CABINET SIDE PANELS AND SIDE PANEL STRIPS. THE ROLLER (ON THE SLIDING TRAY) SHOULD ROLL FREELY ON THE TRACK. READJUST THE 19-9/32" DIMENSION BY ADDING OR REMOVING SHIMS
SHIM
TOP VIEW
CABINET SIDE PANEL
SPECIAL NUT
SIDE PANEL STRIP
SLIDING TRAY ADJUSTMENTS
DOOR HELD FIRMLY AGAINST STOP STRIPS. TO ADJUST: BEND LATCH STRIPS AT TOP AND BOTTOM
LATCH STRIPS
STOP STRIPS
BOTTOM
TOP
REAR FULL LENGTH DOOR ADJUSTMENTS

Figure 7–5. Monitor Cabinet, Adjustments

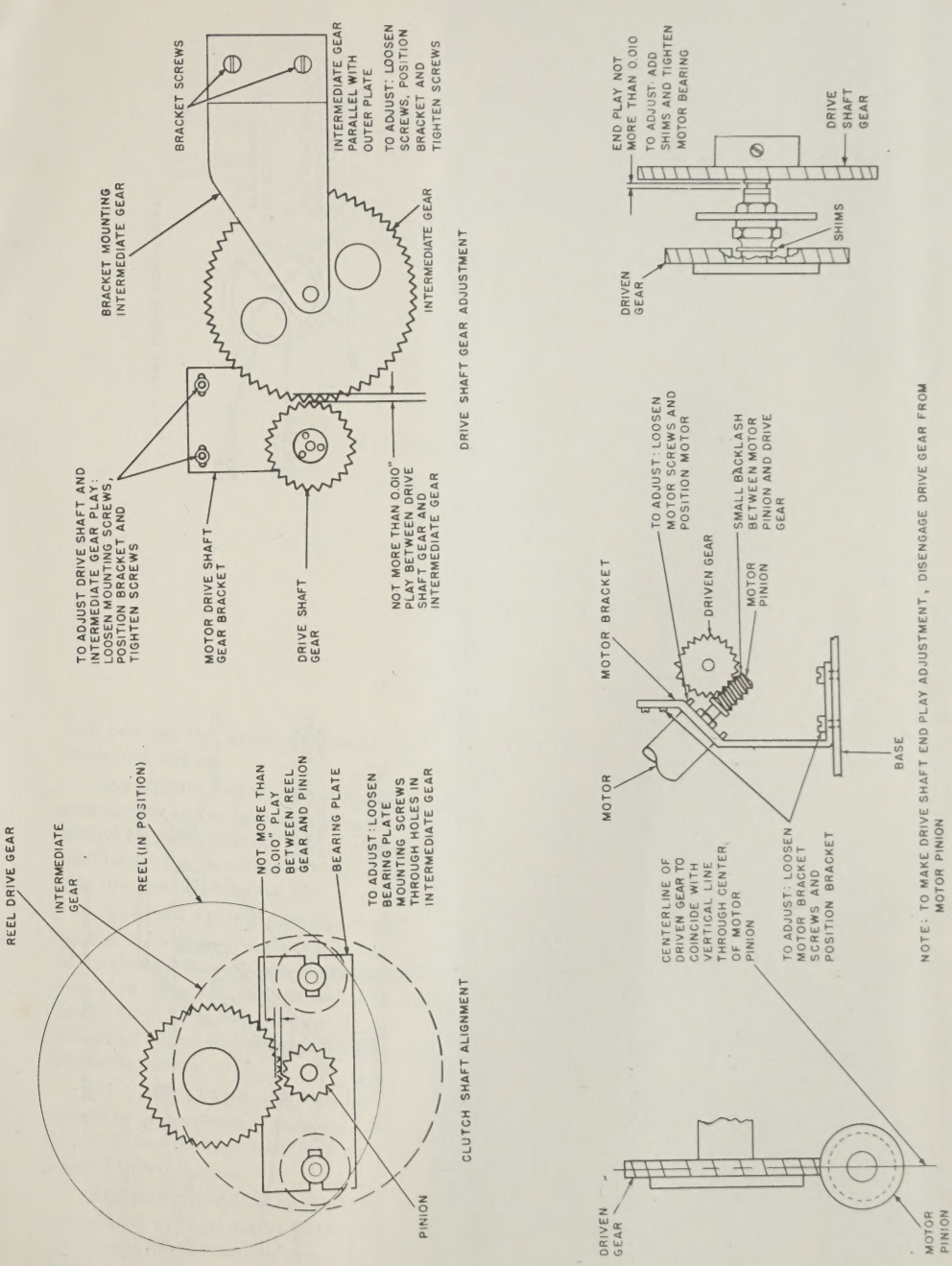
REEL DRIVE GEAR
INTERMEDIATE GEAR
REEL (IN POSITION)
NOT MORE THAN 0.010" PLAY BETWEEN REEL GEAR AND PINION
BEARING PLATE
TO ADJUST: LOOSEN BEARING PLATE MOUNTING SCREWS THROUGH HOLES IN INTERMEDIATE GEAR
PINION
CLUTCH SHAFT ALIGNMENT
BRACKET SCREWS
BRACKET MOUNTING INTERMEDIATE GEAR
INTERMEDIATE GEAR PARALLEL WITH OUTER PLATE
TO ADJUST: LOOSEN SCREWS, POSITION BRACKET AND TIGHTEN SCREWS
TO ADJUST DRIVE SHAFT AND INTERMEDIATE GEAR PLAY: LOOSEN MOUNTING SCREWS, POSITION BRACKET AND TIGHTEN SCREWS
MOTOR DRIVE SHAFT GEAR BRACKET
DRIVE SHAFT GEAR
NOT MORE THAN 0.010" PLAY BETWEEN DRIVE SHAFT GEAR AND INTERMEDIATE GEAR
INTERMEDIATE GEAR
DRIVE SHAFT GEAR ADJUSTMENT
END PLAY NOT MORE THAN 0.010 TO ADJUST: ADD SHIMS AND TIGHTEN MOTOR BEARING
DRIVE SHAFT GEAR
SHIMS
DRIVEN GEAR
MOTOR BRACKET
TO ADJUST: LOOSEN MOTOR SCREWS AND POSITION MOTOR
DRIVEN GEAR
SMALL BACKLASH BETWEEN MOTOR PINION AND DRIVE GEAR
MOTOR PINION
MOTOR
BASE
CENTERLINE OF DRIVEN GEAR TO COINCIDE WITH VERTICAL LINE THROUGH CENTER OF MOTOR PINION
TO ADJUST: LOOSEN MOTOR BRACKET SCREWS AND POSITION BRACKET
NOTE: TO MAKE DRIVE SHAFT END PLAY ADJUSTMENT, DISENGAGE DRIVE GEAR FROM MOTOR PINION
MOTOR POSITION AND DRIVE SHAFT END PLAY ADJUSTMENT
DRIVEN GEAR
MOTOR PINION

Figure 7–6. Reeling Machine Adjustments

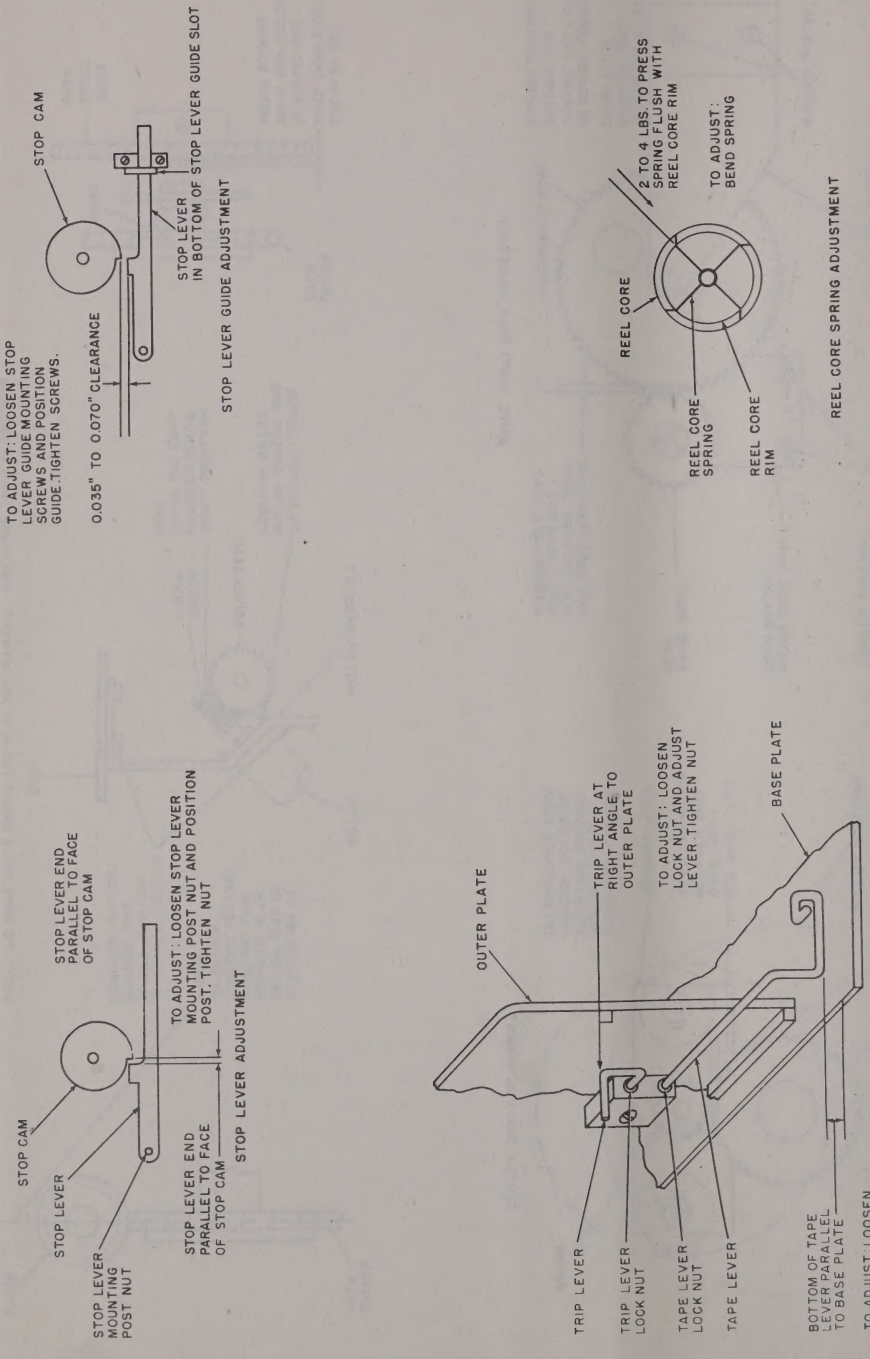
STOP CAM
STOP LEVER
STOP LEVER MOUNTING POST NUT
STOP LEVER END PARALLEL TO FACE OF STOP CAM
STOP LEVER END PARALLEL TO FACE OF STOP CAM
TO ADJUST: LOOSEN STOP LEVER MOUNTING POST NUT AND POSITION POST. TIGHTEN NUT
STOP LEVER ADJUSTMENT
TO ADJUST: LOOSEN STOP LEVER GUIDE MOUNTING SCREWS AND POSITION GUIDE. TIGHTEN SCREWS.
0.035" TO 0.070" CLEARANCE
STOP CAM
STOP LEVER IN BOTTOM OF STOP LEVER GUIDE SLOT
STOP LEVER GUIDE ADJUSTMENT
REEL CORE
2 TO 4 LBS. TO PRESS SPRING FLUSH WITH REEL CORE RIM
TO ADJUST: BEND SPRING
REEL CORE SPRING
REEL CORE RIM
REEL CORE SPRING ADJUSTMENT
OUTER PLATE
TRIP LEVER AT RIGHT ANGLE TO OUTER PLATE
TO ADJUST: LOOSEN LOCK NUT AND ADJUST LEVER. TIGHTEN NUT
BASE PLATE
TRIP LEVER
TRIP LEVER LOCK NUT
TAPE LEVER LOCK NUT
TAPE LEVER
BOTTOM OF TAPE LEVER PARALLEL TO BASE PLATE
TO ADJUST: LOOSEN LOCK NUT AND POSITION LEVER. TIGHTEN NUT
TAPE AND TRIP LEVER ADJUSTMENTS

Figure 7—7. Reeling Machine Adjustments

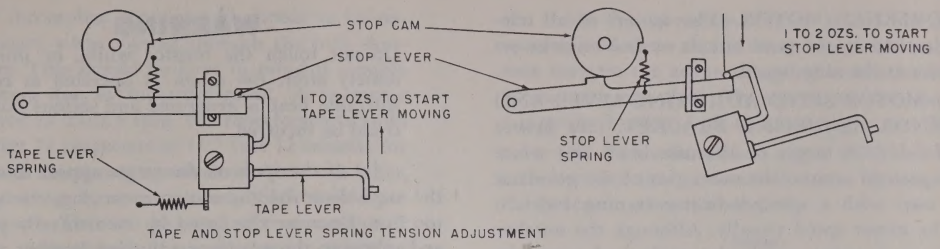
STOP CAM
STOP LEVER
1 TO 2 OZS. TO START TAPE LEVER MOVING
TAPE LEVER SPRING
TAPE LEVER
1 TO 2 OZS. TO START STOP LEVER MOVING
STOP LEVER SPRING
TAPE AND STOP LEVER SPRING TENSION ADJUSTMENT

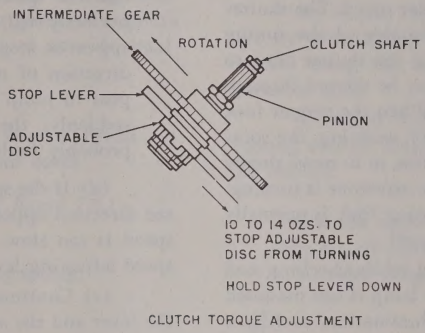

Figure 7—8. Reeling Machine Adjustments

lash between the motor pinion and gear. Tighten the mounting screws.

(5) STOP LEVER.—When the stop lever is in engagement with the stop cam, the end of the stop lever should be parallel to the face of the stop cam. To adjust, loosen the stop lever mounting post nut and position the post. Tighten the nut.

(6) STOP LEVER GUIDE.—With the stop lever against the bottom of the slot in its guide, there should be 0.035 to 0.070 of an inch clearance between the high part of the stop cam and the end of the stop lever (see figure 7-7). To adjust, loosen the stop lever guide mounting screws and position the guide. Tighten the mounting screws.

(7) TAPE LEVER.—The bottom of the tape lever should be approximately parallel to the base plate. To adjust, loosen the tape lever lock nut and position the lever. Tighten the nut.

(8) TRIP LEVER.—The trip lever should be approximately at right angles to the outer plate. To adjust, loosen the locking nut and position the trip lever. Tighten the locking nut.

(9) CLUTCH TORQUE.—Connect the power cord to 115 volts ac and let the motor run for at least ten minutes (see figure 7-8). Hold the stop lever away and hook a 32-ounce scale over the lug on the adjustable disk and pull at right angles to the radius of the disk. It should require 10 to 14 ounces to hold the clutch disk and keep it from turning in its normal direction of rotation. To adjust, loosen the clutch disk lock nut and position the clutch disk. Tighten the lock nut.

(10) TAPE LEVER SPRING TENSION.—With the stop lever held against the bottom of the notch in its guide, hook an eight-ounce scale under the end of the tape lever, where the tape rides, and pull upwards. It should require one to two ounces to start the tape lever moving. If it does not, replace the tape lever spring.

(11) STOP LEVER SPRING TENSION.—With the stop lever against the low part of the stop cam and the stop cam positioned so that it does not bear against the end of the stop lever, place an eight-ounce scale on the stop lever at the end and push downward in line with the spring. It should require one to two ounces to start the lever moving away from the cam. If it does not, replace the stop lever spring.

(12) REEL CORE SPRING.—With a 12-pound scale pushing down on the reel core spring, it should require four to six pounds to cause each compression spring to compress flush with the core rim. To adjust, bend each spring.

e. GOVERNED MOTOR.—The motors of all teletypewriter sets in the same circuit or line must be set to operate at the same speed.

(1) MOTOR SPEED ADJUSTING LEVER AND GOVERNOR ADJUSTING BRACKET. (*See figures 7-9 and 7-11.*)—A target of alternate black and white spots is painted around the outer rim of the governor and is used with a speed indicator (tuning fork) to check the motor speed visually. Although the number of spots on a target varies, the method of using the target in checking and setting the motor speed remains the same. A tuning fork, which is made of flexible metal and equipped with a slit shutter on one end, is constructed to vibrate at a particular speed. The shutter is made to vibrate by striking the side of the tuning fork against the hand. By holding the shutter close to the eye, the spots on the target may be viewed through the slits; this is called scanning. When the proper fork for a given motor speed is used for scanning, the spots on the target appear to be motionless, or to move slowly in the same direction in which the governor is turning. The 87.6 vibration per second tuning fork is normally used when adjusting the motor speed.

The target must be illuminated while checking and adjusting motor speed. If a target lamp is not mounted behind the motor, a source of illumination, such as a flashlight, must be provided so a steady light will shine on the target. Allow the motor to warm up from three to five minutes before adjusting the speed. The motor speed should be checked under normal operating load conditions. To check and set the motor speed, proceed as follows:

(*a*) Using the 87.6-vibration per second tuning fork, strike it against the palm of the hand to start it vibrating.

(*b*) Scan the target, holding the tuning fork as close to the eye as is necessary to view the target.

WARNING

Do not touch the resistor while, or immediately after, the motor is operated as considerable heat is generated and serious burns could be incurred.

(*c*) If the spots on the target appear to move in the same direction the motor is turning, the speed is too fast. Decrease the speed by momentarily pressing and releasing the governor adjusting bracket.

Note

Because it is difficult to adjust the governor so that the spots on the target appear to stand perfectly still, adjust the governor so the spots appear to stop or to travel very slowly in the direction of motor rotation. If the spots appear to jump back and forth or to disappear suddenly, the governor contact points are probably faulty.

(*d*) If the spots on the target appear to move in the direction opposite to the motor rotation, the motor speed is too slow. Increase the speed by moving the speed adjusting lever.

(*e*) Continue to adjust the speed, by means of the lever and the adjusting bracket until the target appears to stand still. The motor is then synchronized at its proper speed.

(*f*) When the motor speed has been adjusted, turn off the target lamp or remove the temporary target illumination.

CAUTION

It is possible to set the motor speed incorrectly due to getting a multiple of one fourth the correct motor speed; that is, the speed could be half the desired speed, twice the desired speed, or some other multiple, but the spots,

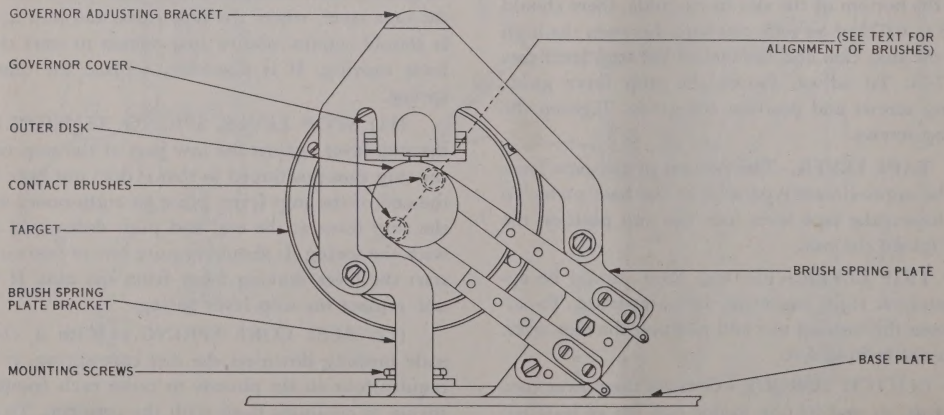

Figure 7—9. Governor Adjusting and Brush Spring Plate Brackets

or incomplete spots, would appear to be stationary when viewed through the fork shutters. This should be kept in mind if trouble occurs due to incorrect speed. At a motor speed of 2102.4 rpm, the reperforator should print 72 characters in 11.7 (use 12 seconds for quick emergency speed checks) seconds when operating at approximately 61.3 words per minute. This can be checked to determine if the motor speed is actually any multiple of one fourth of 2102.4 rpm.

(2) GOVERNOR CONTACTS. (*See figure 7-12.*) —All governor contacts must be adjusted for alignment of edges and for contact height. The governor contacts should be in line and meet squarely to provide maximum contact surface.

Note

Remove the governor adjusting bracket, brush spring plate, target, and governor cover.

(3) GOVERNOR SHELL. (*See figure 7-9.*)

Note

Remove the speed adjusting spring.

(*a*) The governor contact points should meet squarely and there should be at least 0.010 inch clearance between the governor spring bracket and the rim of the governor shell. To adjust, position the governor spring bracket with its mounting screws loosened.

(*b*) There should be a gap of 0.015 inch to 0.040 inch between the governor contacts. To adjust, bend the governor contact spring.

Note

Replace the speed adjusting spring.

(*c*) Align the edges of the contacts by means of the floating contact hinge mounting screw.

(*d*) Adjust contacts for squareness from right to left by positioning the height of the fixed contact bracket using the elongated mounting holes in the governor shell.

(*e*) Align from front to back by twisting the floating contact hinge. Apply pressure to the arm near the contact.

Note

Check the edges of the contacts to see that they are all equal on all sides using an 0.002-inch feeler gauge (or smaller if available).

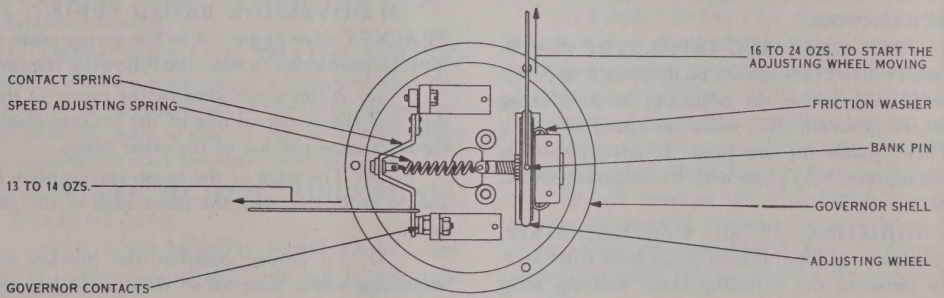

Figure 7—10. Governor Contacts, Speed Adjusting Wheel Friction Washer Spring, and Speed Adjusting Spring

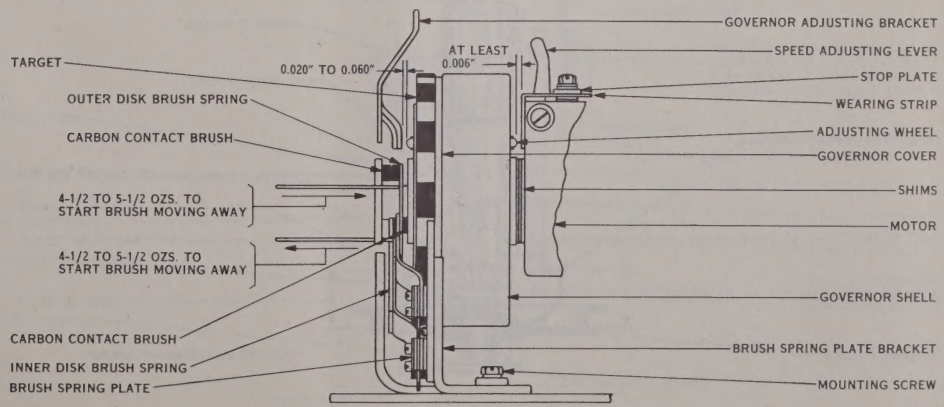

Figure 7—11. Speed Adjusting Lever Stop Plate, Wearing Strip, and Governor Brush Springs

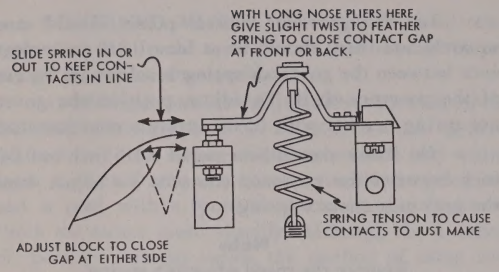
WITH LONG NOSE PLIERS HERE, GIVE SLIGHT TWIST TO FEATHER SPRING TO CLOSE CONTACT GAP AT FRONT OR BACK.
SLIDE SPRING IN OR OUT TO KEEP CONTACTS IN LINE
SPRING TENSION TO CAUSE CONTACTS TO JUST MAKE
ADJUST BLOCK TO CLOSE GAP AT EITHER SIDE

Figure 7-12.—Positioning Governor Contacts

(4) SPEED ADJUSTING WHEEL FRICTION WASHER SPRING. (*See figure 7-10.*)—A tension of 13 to 14 ounces should be required to break the governor contacts. To check, hook a 32-ounce scale over the contact spring arm next to the contact and pull parallel to the speed adjusting spring. To adjust, turn the adjusting wheel.

A tension of 16 to 24 ounces should be required to start the speed adjusting wheel moving. To check, insert a bank pin in the leather rim of the wheel and hook a 32-ounce scale over the pin. Pull at right angles to the radius and note the tension as the wheel starts to move. To adjust, remove the friction washer and bend the large projections.

(5) SPEED ADJUSTING LEVER STOP PLATE. (*See figure 7-11.*)—There should be 0.006-inch to 0.050-inch clearance between the adjusting lever wearing strip and the governor shell when the speed adjusting lever is held against the stop plate. To adjust, position the adjusting lever stop plate with its mounting screws loosened.

(6) ADJUSTING LEVER WEARING STRIP. (*See figure 7-11.*)—There should be at least 0.006-inch clearance between the adjusting lever wearing strip and the adjusting wheel when the adjusting wheel is opposite the wearing strip and the play of the armature is taken up in a direction to make this clearance a minimum by overcoming the armature end thrust spring. To adjust, install shims on the armature shaft between the governor hub and the end frame casting.

(7) INNER AND OUTER DISK CONTACT SPRINGS. (*See figure 7-13.*)—The distance from the inner surface of the governor cover to the highest point of the contact springs should be 25/32 inch to 27/32 inch. Measure the height of the springs. To adjust, bend the contact springs.

(*a*) Place a D socket wrench over the nut located in the center of the governor cover. Measure the radial distance from the vertical surface of the wrench to the curved surface of the inner disk contact spring. The distance should be 17/32 inch to 19/32 inch. To adjust, bend the contact spring.

(*b*) Check the distance from the wrench to the outer disk contact spring as described above. This distance should be 7/16 inch to 1/2 inch. To adjust, bend the contact spring.

Note

Replace the governor cover, target, and brush spring plate.

(8) GOVERNOR BRUSH SPRING PLATE BRACKET. (*See figure 7-9.*)—The spring plate bracket must be positioned to meet the following requirements.

(*a*) A line established by the center of the outer disk and the center of one of the brushes should pass through some portion of the other brush.

(*b*) The edge of the brush spring plate bracket should be in line with the outer edge of the governor cover.

(*c*) To adjust, position the bracket with its mounting screw loosened so it is parallel to the edge of the motor base plate.

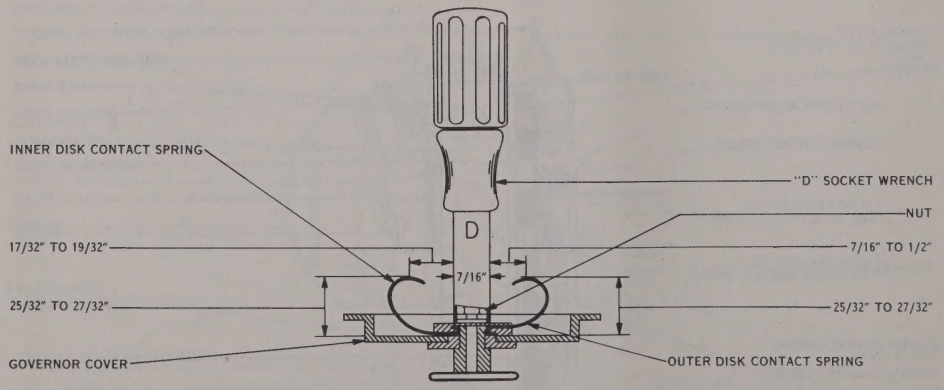

Figure 7—13. Inner and Outer Disk Contact Springs

(9) GOVERNOR BRUSH SPRINGS. (*See figure 7-11.*)—It should require a tension of 4½ to 5½ ounces to start the inner disk brush moving away from the disk. To check, hook an eight ounce scale over the inner disk brush spring next to the brush and pull horizontally, noting the tension as the brush starts to move. To adjust, remove and bend the brush springs.

Note

When the springs are replaced, make sure the brushes lie flat against their respective disks and that the outer edges of the brushes are either flush with or not more than 3/64-inch inside the outer edges of the disks.

A pressure of 4½ to 5½ ounces should be required to start the outer disk brush moving away from its disk. To check, apply the push end of an eight ounce scale to the outer brush spring next to the brush. Push horizontally toward the motor and note the pressure required to move the brush. To adjust, repeat the procedure described above for the inner disk brush spring.

(10) GOVERNOR ADJUSTING BRACKET. (*See figure 7-11.*)—There should be 0.020-inch to 0.060-inch clearance between the speed adjusting wheel and the governor adjusting bracket. To adjust, bend the governor adjusting bracket.

(11) ARMATURE END THRUST SPRING PRESSURE.—With a push end of a 12-pound scale applied against the governor end of the shaft and pushed parallel with the shaft, it should require at least seven pounds pressure to start the shaft moving.

f. TIME STAMP MX-1527/U ADJUSTMENTS. (*See figure 7-14.*)

(1) HOUR AND MONTH PUSH PAWL. (*See figure 7-15.*)—The ends of the hour and month push pawls should overtravel their lock levers a minimum of 1/16 inch.

(*a*) Check with the push pawls in their forward positions. Make sure that the front and rear safety springs have sufficient tension to keep the push pawls seated in the typewheel sprockets.

(*b*) To adjust, form the ends of the push pawls.

(2) DATE PUSH PAWL. (*See figure 7-15.*)—The date push pawl should overtravel its lock lever a minimum of 1/32 inch when in its foward position. Adjustment is the same as for the hour and month push pawls as described in (*a*) above.

(3) HOUR AND MONTH FEED TOOTH. (*See figure 7-16.*)—The back of the tooth on the hour and month push pawls should touch the next sprocket tooth when the cam wiper is on the high point of its cam.

(*a*) To check, hold the rear end of the push pawl up so the rivet is at the top of the short slanting slot in the throw lever. Check the sprocket tooth in back of the tooth which is to advance the typewheel.

(*b*) To adjust, form the upper end of the throw lever with a screwdriver or pliers so as to bottom on the frame tie post when the push pawl tooth touches the sprocket.

(4) LOCK LEVER. (*See figures 7-17 and 7-18.*)—The lock lever should release the typewheel before the push pawl catches the sprocket tooth. There should be a clearance of 0.005 to 0.010 inch between the lock lever and the typewheel sprocket when the push pawl feed tooth engages a sprocket tooth. To adjust, form the pawl end of the lock lever. Each push pawl should raise its lock levers as the typewheel is advanced. The maximum clearance between the lock lever and typewheel should not exceed 0.060 inch. To adjust, if clearance is excessive, file the point of the lock lever.

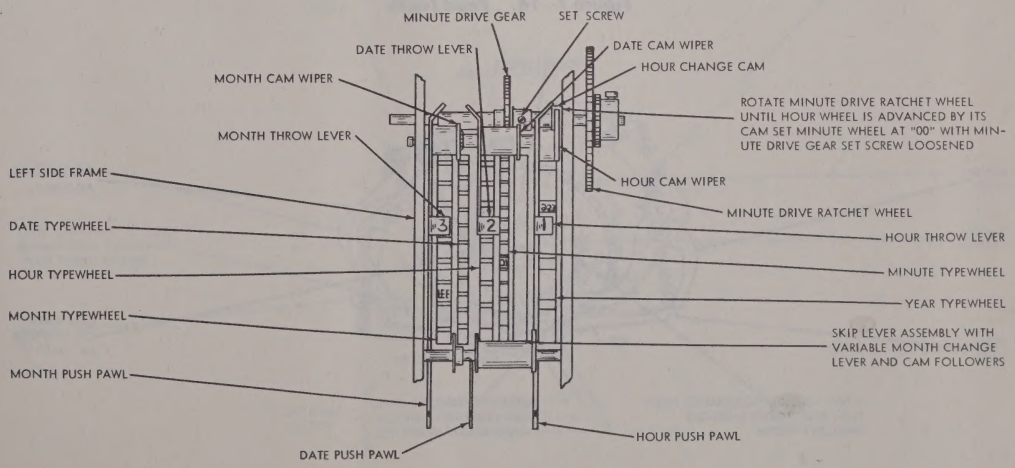
MINUTE DRIVE GEAR
SET SCREW
DATE THROW LEVER
DATE CAM WIPER
HOUR CHANGE CAM
MONTH CAM WIPER
ROTATE MINUTE DRIVE RATCHET WHEEL UNTIL HOUR WHEEL IS ADVANCED BY ITS CAM SET MINUTE WHEEL AT "00" WITH MINUTE DRIVE GEAR SET SCREW LOOSENED
MONTH THROW LEVER
LEFT SIDE FRAME
HOUR CAM WIPER
MINUTE DRIVE RATCHET WHEEL
DATE TYPEWHEEL
HOUR THROW LEVER
HOUR TYPEWHEEL
MINUTE TYPEWHEEL
YEAR TYPEWHEEL
MONTH TYPEWHEEL
SKIP LEVER ASSEMBLY WITH VARIABLE MONTH CHANGE LEVER AND CAM FOLLOWERS
MONTH PUSH PAWL
HOUR PUSH PAWL
DATE PUSH PAWL

Figure 7—14. Top View of Typewheels

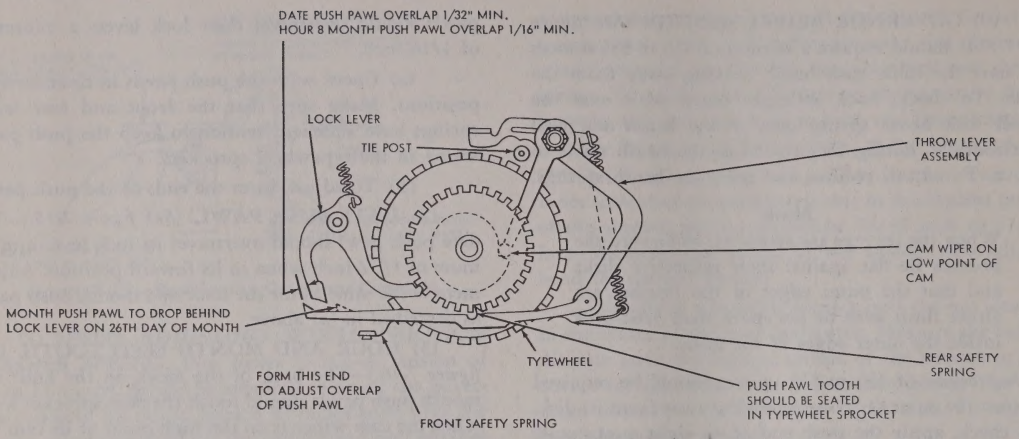
DATE PUSH PAWL OVERLAP 1/32" MIN.
HOUR 8 MONTH PUSH PAWL OVERLAP 1/16" MIN.
LOCK LEVER
TIE POST
THROW LEVER ASSEMBLY
CAM WIPER ON LOW POINT OF CAM
MONTH PUSH PAWL TO DROP BEHIND LOCK LEVER ON 26TH DAY OF MONTH
TYPEWHEEL
REAR SAFETY SPRING
FORM THIS END TO ADJUST OVERLAP OF PUSH PAWL
PUSH PAWL TOOTH SHOULD BE SEATED IN TYPEWHEEL SPROCKET
FRONT SAFETY SPRING

Figure 7—15. Push Pawl

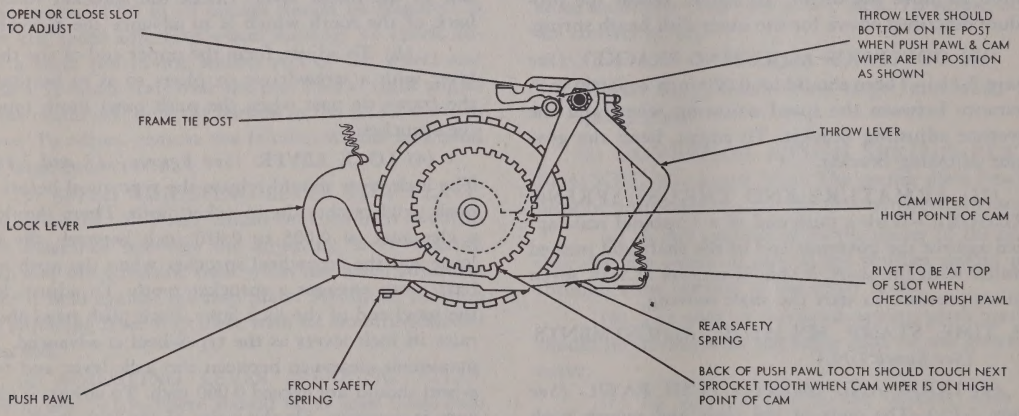
OPEN OR CLOSE SLOT TO ADJUST
THROW LEVER SHOULD BOTTOM ON TIE POST WHEN PUSH PAWL & CAM WIPER ARE IN POSITION AS SHOWN
FRAME TIE POST
THROW LEVER
LOCK LEVER
CAM WIPER ON HIGH POINT OF CAM
RIVET TO BE AT TOP OF SLOT WHEN CHECKING PUSH PAWL
REAR SAFETY SPRING
BACK OF PUSH PAWL TOOTH SHOULD TOUCH NEXT SPROCKET TOOTH WHEN CAM WIPER IS ON HIGH POINT OF CAM
PUSH PAWL
FRONT SAFETY SPRING

Figure 7—16. Feed Tooth

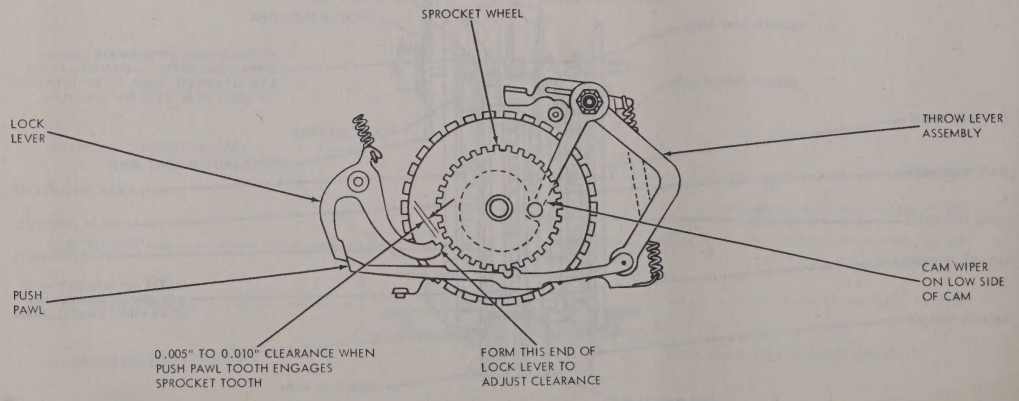
SPROCKET WHEEL
LOCK LEVER
THROW LEVER ASSEMBLY
CAM WIPER ON LOW SIDE OF CAM
PUSH PAWL
0.005" TO 0.010" CLEARANCE WHEN PUSH PAWL TOOTH ENGAGES SPROCKET TOOTH
FORM THIS END OF LOCK LEVER TO ADJUST CLEARANCE

Figure 7—17. Lock Lever

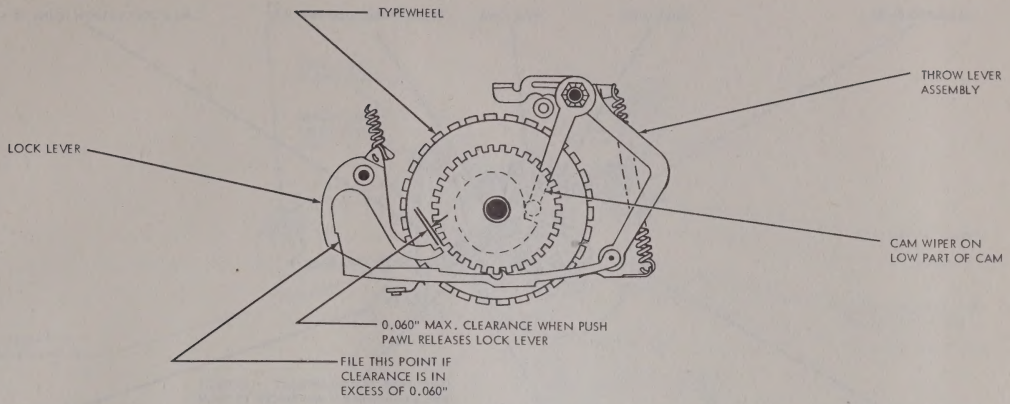
TYPEWHEEL
THROW LEVER ASSEMBLY
LOCK LEVER
CAM WIPER ON LOW PART OF CAM
0.060" MAX. CLEARANCE WHEN PUSH PAWL RELEASES LOCK LEVER
FILE THIS POINT IF CLEARANCE IS IN EXCESS OF 0.060"

Figure 7—18. Maximum Clearance of Lock Lever

CAUTION

Do not change the surface angle of the lock lever when filing.

(5) DATE CAM WIPER ARM. *(See figure 7-19.)*

Note

To facilitate checking and adjusting the time stamp, remove the left side frame assembly as described in paragraph 8.

The date push pawl should drop in back of the lock lever when the hour wheel is at 2100 printing position.

(*a*) To check, operate the hour throw lever manually and observe the action of the push pawls. Remove the throw lever pivot shaft for access to the cam wipers.

Note

The throw lever pivot shaft is knurled at one end to prevent its turning in the frame. Use care when removing. Removal of the throw levers and push pawls will be easier if the safety springs are removed.

(*b*) To adjust, form the throw lever cam wiper arm.

(6) MONTH CAM WIPER ARM. *(See figure 7-15.)*—The month push pawl should drop in back of its lock lever on the 26th day of the month. To check and adjust, follow the procedure described in sub-paragraph (5) above.

(7) MONTH THROW LEVER SPRING TENSION. *(See figure 7-15.)*—The spring should be strong

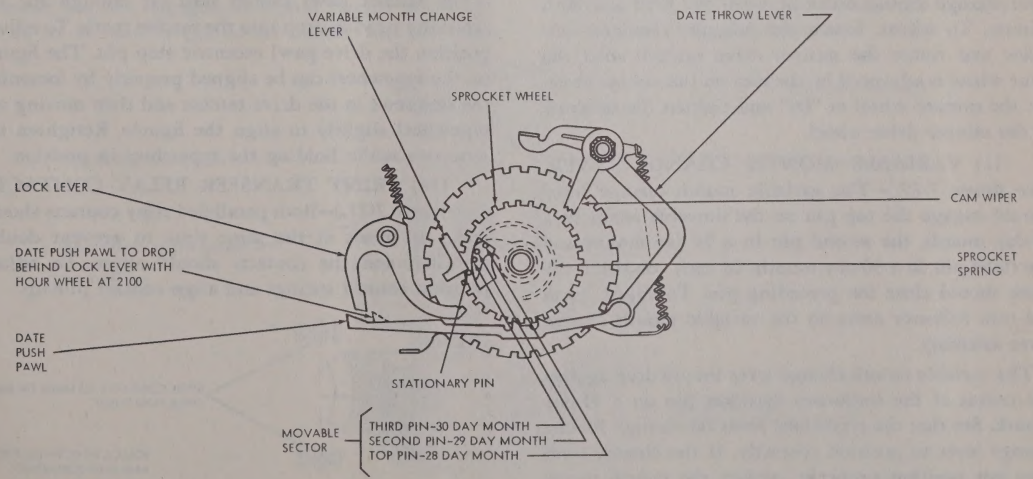

Figure 7—19. Variable Month Change Lever

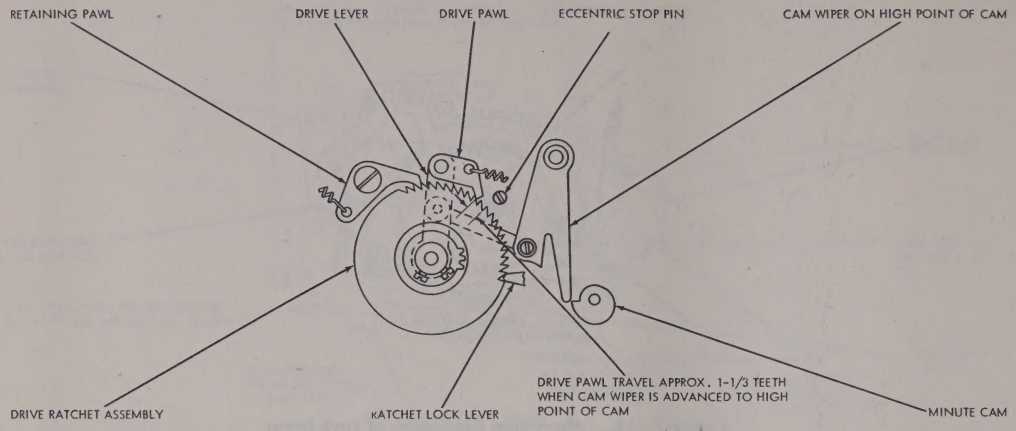
RETAINING PAWL
DRIVE LEVER
DRIVE PAWL
ECCENTRIC STOP PIN
CAM WIPER ON HIGH POINT OF CAM
DRIVE RATCHET ASSEMBLY
RATCHET LOCK LEVER
DRIVE PAWL TRAVEL APPROX. 1-1/3 TEETH WHEN CAM WIPER IS ADVANCED TO HIGH POINT OF CAM
MINUTE CAM

Figure 7—20. Minute Drive Assembly

enough for the push pawl to release the lock lever and rotate the typewheel to its next position. If this condition is not met, replace the spring.

(8) DATE THROW LEVER SPRING TENSION. *(See figure 7-15.)*—The spring should have enough tension to drive the typewheel from the 28th day of February to the 1st of March positions. If this condition is not met, replace the spring.

(9) HOUR THROW LEVER SPRING TENSION. *(See figure 7-15.)*—The spring should advance the hour typewheel when the throw lever is operated slowly by hand. Check throughout a complete revolution of the wheel. Replace the spring if the typewheel operates too slowly.

(10) HOUR CHANGE. *(See figure 7-22.)*—The hour change should occur between the 59th and 60th minute. To adjust, loosen the minute drive gear setscrew and rotate the minute drive ratchet until the hour wheel is advanced by the cam on the ratchet shaft. Set the minute wheel at "00" and tighten the setscrew in the minute drive wheel.

(11) VARIABLE MONTH CHANGE LEVER. *(See figure 7-19.)*—The variable month change lever should engage the top pin on the movable sector in a 28-day month, the second pin in a 29-day month and the third pin in a 30-day month. In each condition the lever should clear the preceding pin. To adjust, form the cam follower arms on the variable month change lever assembly.

The variable month change lever should drop against the center of the stationary sprocket pin on a 31-day month. See that the typewheel feeds far enough for the change lever to position correctly. If the change lever does not position properly, replace the month throw lever spring.

Note

The action of the variable month change lever can be checked by assembling the typehead and leaving out the complete 0-23 hour and minute typewheel assembly and the minute drive gear. The date throw lever can then be operated by hand and the action of the variable month change lever observed for the various months and leap year.

(12) MINUTE DRIVE PAWL. *(See figure 7-20.)*—With the cam wiper on the high part of the minute advance cam, the drive pawl should travel approximately 1⅓ teeth on the ratchet wheel. To adjust, form the lower extension of the cam wiper.

(13) DRIVE PAWL STOP PIN. *(See figure 7-20.)*—The ratchet pawl should feed far enough for the retaining pawl to drop into the ratchet tooth. To adjust, position the drive pawl eccentric stop pin. The figures on the typewheel can be aligned properly by loosening the setscrews in the drive ratchet and then moving the typewheel slightly to align the figures. Retighten the setscrews while holding the typewheel in position.

(14) PRINT TRANSFER RELAY CONTACTS. *(See figure 7-21.)*—Both paralleled relay contacts should make or break at the same time to prevent double printing, and the contacts should align. To adjust, position contact springs and align contact pile-up.

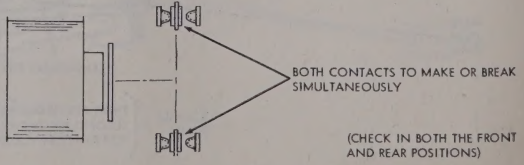

Figure 7—21. Print Transfer Relay Contacts

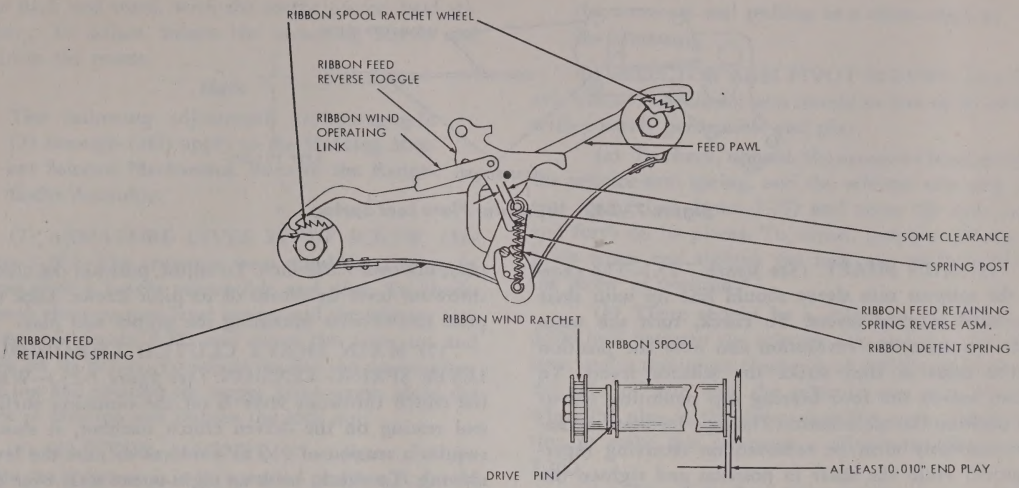

Figure 7—22. Ribbon Feed

(15) RIBBON FEED AND RIBBON REVERSE. *(See figure 7-22.)*—The ribbon spools should have at least 0.010 end play and the ratchet wheel should turn freely. To adjust, replace the ribbon shift toggle spring if it is weak.

g. REPERFORATOR ADJUSTMENTS.

Note

Remove the brackets with tape reel containers from the reperforators in a monitoring cabinet before starting adjustments.

(1) MAIN SHAFT CLUTCH SPRING TENSION. *(See figure 7-23.)*—With the teeth of the driven clutch member resting against the teeth of the driving member but not engaged, it should require a tension of 24 to 30 ounces (40 to 64 ounces for 100-wpm spring) to separate the clutch teeth. To check, hook a 32-ounce scale over the throwout cam on the driven clutch member and pull in line with the shaft. Note the tension as the clutch teeth separate.

(2) SELECTOR SEPARATOR PLATES. *(See figure 7-24.)*—The tip of the leaf spring should extend 0.050- to 0.060-inch below the separator plate. To adjust, bend the leaf springs at their narrow portions.

Note

The separator plate leaf springs should not require adjustment unless the reperforator has been damaged or dismantled. Use extreme care in the removal and replacement of the plates to prevent distorting the springs. The swords and selector levers should be replaced in the identical positions.

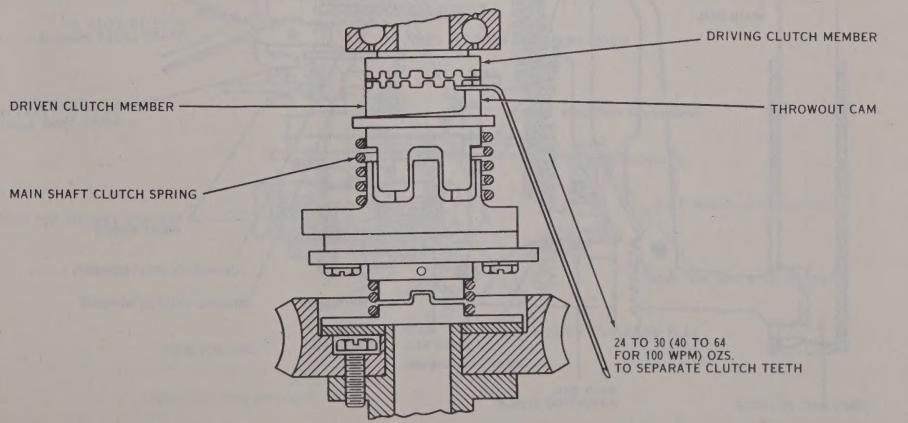
DRIVING CLUTCH MEMBER
DRIVEN CLUTCH MEMBER
THROWOUT CAM
MAIN SHAFT CLUTCH SPRING
24 TO 30 (40 TO 64 FOR 100 WPM) OZS. TO SEPARATE CLUTCH TEETH

Figure 7—23. Main Shaft Clutch Spring Tension

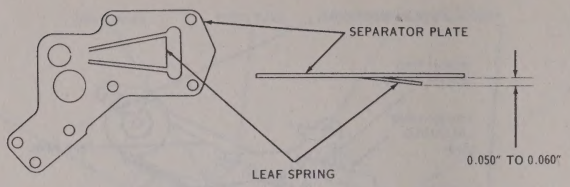

Figure 7—24. Separator Plate Leaf Spring

(3) MAIN SHAFT. *(See figure 7-25.)*—The cams on the selector cam sleeve should line up with their associated selector levers. To check, turn the main shaft one complete revolution and note the position of the cams as they strike the selector levers. To adjust, loosen the four bearing cap mounting screws and position the main shaft. (The tape feed-out mechanism assembly must be removed on receiving reperforators.) Hold the shaft in position and tighten the bearing cap mounting screws.

(4) MAIN SHAFT CLUTCH THROWOUT LEVER. *(See figure 7-25.)*—With the motor operating, open and close the signal line and then stop the motor. There should be 0.010- to 0.020-inch clearance between the teeth of the two clutch members. The clutch throwout lever should be free on its pilot screws with some play, not over 0.002 inch. To adjust, position the clutch throwout lever by means of its pilot screws. Lock the pilot screws after obtaining the proper end play.

(5) MAIN SHAFT CLUTCH THROWOUT LEVER SPRING TENSION. *(See figure 7-25.)*—When the clutch throwout lever is off the camming surface and resting on the driven clutch member, it should require a tension of 2½ to 4 ounces to start the lever moving. To check, hook an eight-ounce scale over the clutch throwout lever at the spring hole and pull at right angle to the lever.

(6) MOTOR GEARS.—There should be a barely perceptible amount of backlash between the motor pinion and main shaft gear. Check throughout one complete revolution of the main shaft. The backlash should barely be felt while moving the main shaft

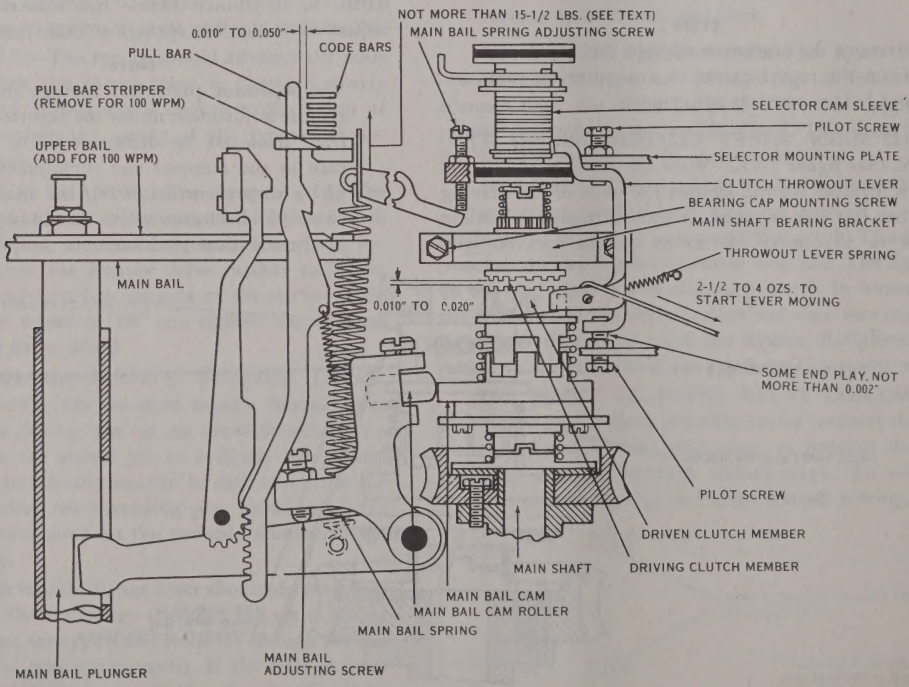

Figure 7—25. Main Shaft Clutch Throwout Lever, Clutch Spring Tension and Main Bail

gear back and forth, with the motor pinion held stationary. To adjust, loosen the mounting screws and position the motor.

Note

The following adjustments (subparagraphs (7) through (26)) apply to the Holding Magnet Selector Mechanism. Remove the Rangefinder Assembly.

(7) ARMATURE LEVER PIVOT SCREW. *(See figure 7-26.)*—The armature lever should be free on its pivots with a barely perceptible end play. To check, unhook the armature lever spring and the selector arm spring (see figure 7-27) and move the lever up and down on its pivots. To adjust, loosen the upper pivot lock nut and position the upper pivot screw. Hold the screw in position and tighten the lock nut.

(8) SELECTOR MAGNET. *(See figure 7-27.)*—When the armature is in its operated position, it should contact both magnet pole faces simultaneously and the magnet cores should be located equidistant from the outer edges of the lever (gauged by eye). To adjust, remove the selector magnet bracket from the unit and reposition the magnet core assembly. Loosen the mounting screws and hold the assembly so the cores are vertical. With the armature resting on the pole faces by its own weight, position the magnet core assembly and tighten the mounting screws.

Note

When the cores are in proper adjustment, a minimum tension of 3½ pounds should be required to separate the armature from the cores when a current of 0.020 ampere flows through the magnet coils. (The coils in series are shunted by a 5000-ohm resistor.) Check by placing a 64-ounce scale on the edge of the armature and pulling at a right angle to the armature.

(9) SELECTOR ARM PIVOT SCREWS. *(See figure 7-26.)*—The selector arm should be free on its pivots with a barely perceptible end play.

(*a*) To check, unhook the armature lever spring, the selector arm spring, and the selector arm stop detent spring (see figure 7-27) and move the arm back and forth on its pivots. To adjust, position the upper pivot screw and tighten the lock nut while holding the screw in position.

(*b*) There should be a minimum clearance of 0.008 inch between the selector arm and the armature lever and a minimum clearance of 0.010 inch between the selector arm and the selector arm stop detent, when the play in the detent is taken up in the direction to make this clearance a minimum. (See figure 7-26.)

(*c*) To adjust the minimum clearance, remove the selector magnet bracket and the selector arm bracket and position both pivot screws of the selector arm. (See figure 7-26.)

(10) SELECTOR ARM BRACKET. *(See figure 7-28.)*—The selector arm bracket should be positioned to provide some clearance, not more than 0.040 inch, between each sword and either stop post.

(*a*) To check, remove the locking lever spring, armature lever spring, and selector arm spring. Rotate the main shaft until the No. 1 selector lever is resting on the peak of its cam. Move the selector arm to its unoperated (SPACING) position. Move the No. 1 sword so its spacing arm touches the selector arm extension. Rotate the selector arm slowly toward the operated (MARKING) position until the selector arm extension just leaves the spacing arm of the No. 1 sword. There should be some clearance, not more than

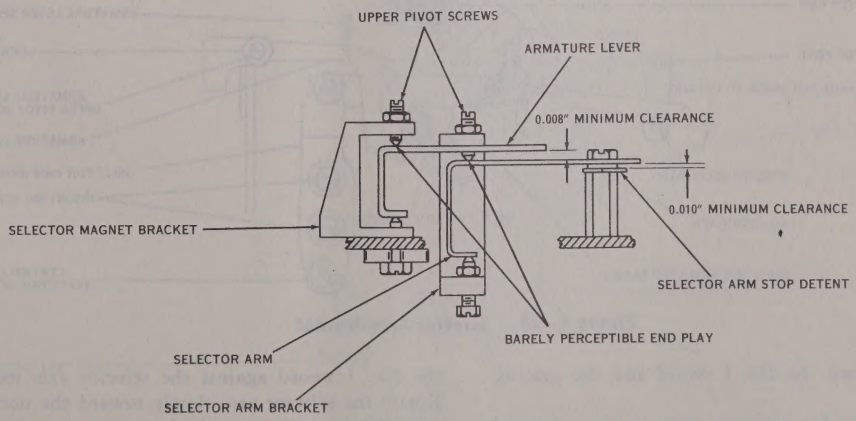

Figure 7—26. Selector Arm and Armature Lever

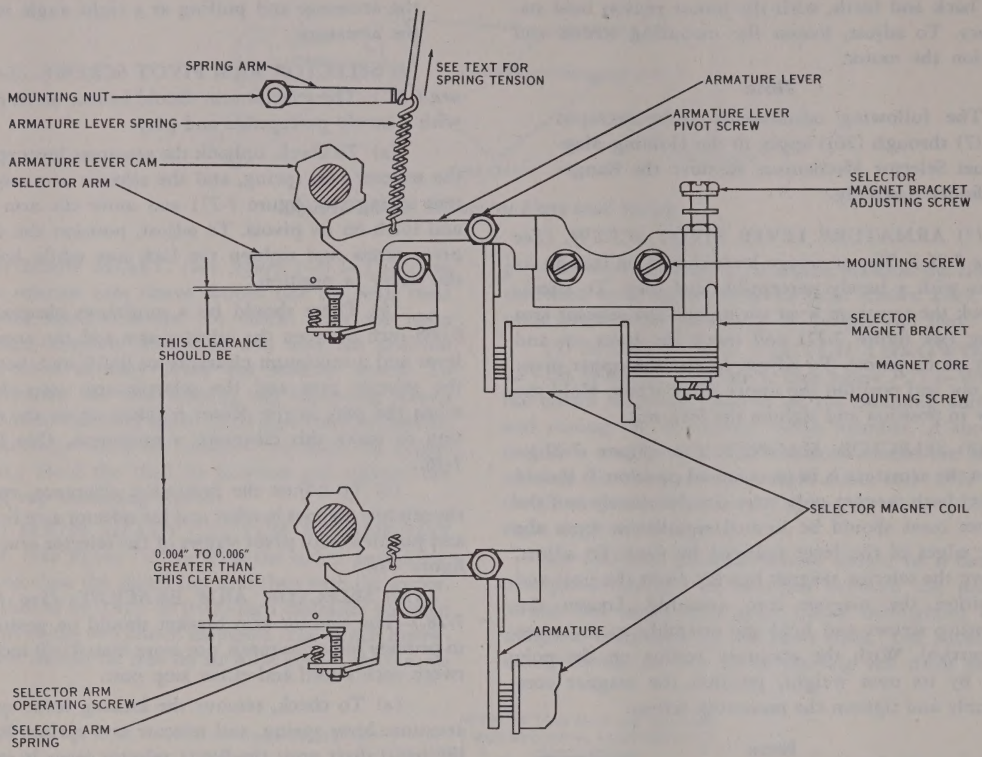

Figure 7—27. Selector Magnet Bracket and Armature Lever Spring

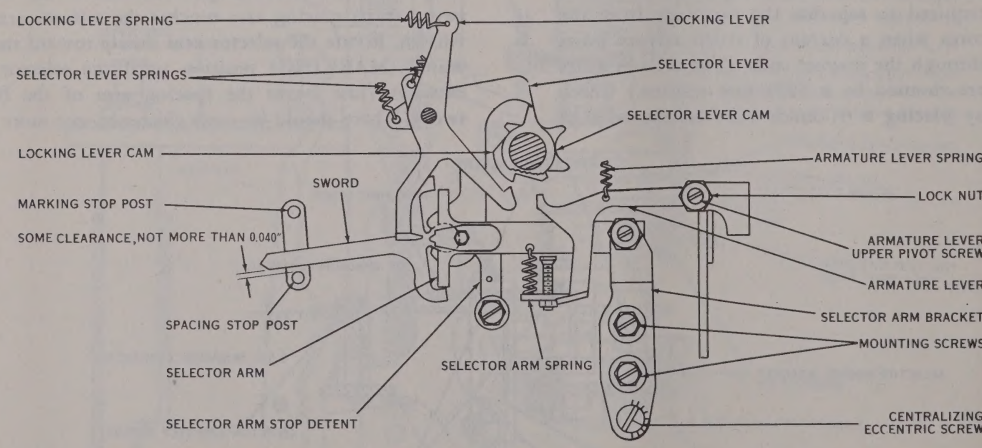

Figure 7—28. Selector Arm Bracket

0.40 inch, between the No. 1 sword and the spacing stop post.

(*b*) Place the selector arm in its operated (MARKING) position and move the marking arm of the No. 1 sword against the selector arm extension. Rotate the selector arm slowly toward the unoperated (SPACING) position until the selector arm just leaves the marking arm of the No. 1 sword. There should be

some clearance, not more than 0.040 inch, between the No. 1 sword and the marking stop post. Check each sword for the above requirements.

(*c*) To adjust, loosen the selector arm bracket mounting screws (not more than just enough to leave the bracket friction tight) and equalize the clearance between the swords and stop posts by turning the centralizing eccentric screw (see figure 7-28). Clockwise rotation provides more clearance at the spacing stop post; counterclockwise, more clearance at the marking stop post.

Note

Make sure the selector arm stop detent does not interfere with the adjustment.

(*d*) The centralizing eccentric screw should always be located so that its indicating line is adjacent to the marked scale on the bracket. Tighten the lock nut after the selector arm has been centralized.

(*e*) To obtain the proper clearance (some, not over 0.040 inch) between the swords and the stop posts, insert the No. 90783 adjusting wrench in one of the two holes provided and turn the wrench to move the bracket closer to or farther from the swords as required. Tighten the selector arm bracket mounting screws and replace the locking lever, selector arm, and armature lever springs.

(11) LOCKING WEDGE. *(See figure 7-29.)*—The locking wedge should clear the locking lever by 0.006 to 0.010 inch. To check, rotate the main shaft until the locking lever is on the high part of its cam and hold the end of the wedge in line with the locking lever. To adjust, loosen the mounting screw and position the locking wedge in its guide. Hold the wedge in position and tighten its mounting screw.

(12) LOCKING LEVER SPRING TENSION. *(See figure 7-29.)*—A tension of from 4 to 5½ ounces (7 to 10 ounces for 100-wpm spring) should be required to

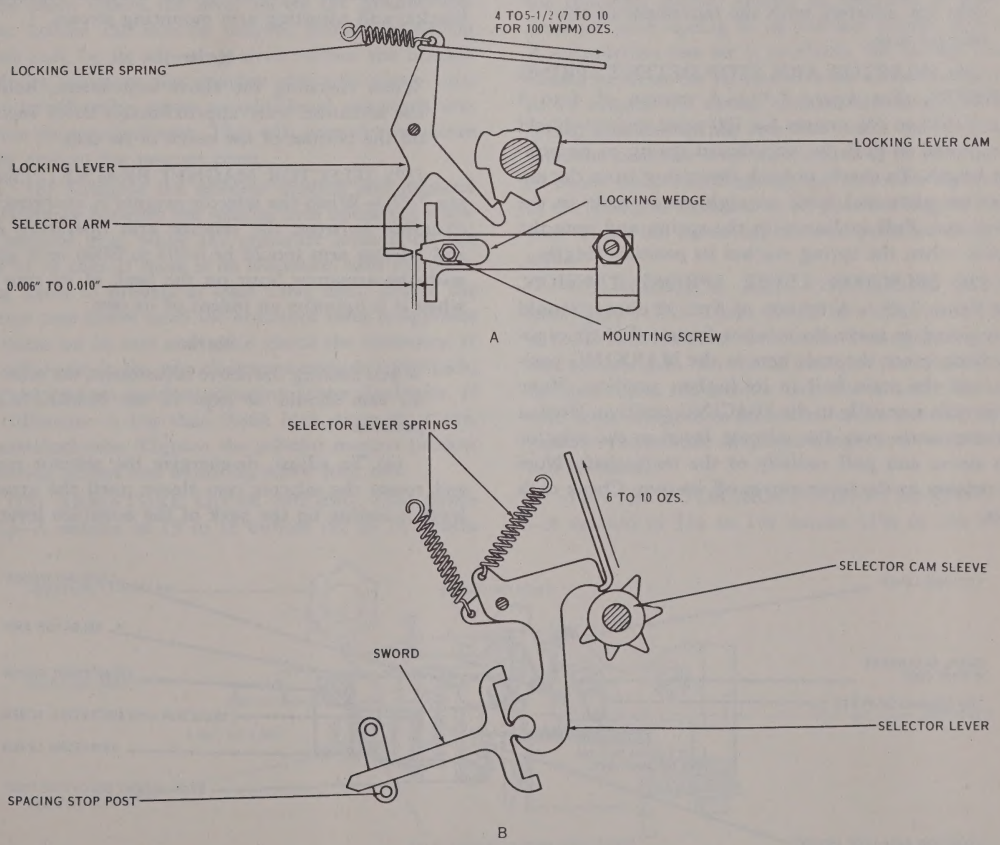

Figure 7–29. Selector Lever Spring Tension and Locking Wedge

start the locking lever moving away from its cam. To check, rotate the main shaft until the locking lever is on the high part of its cam. Hook an eight-ounce scale on the locking lever at the spring hole and pull in line with the spring. Note the tension as the lever starts moving.

(13) SELECTOR ARM STOP DETENT *(See figure 7-30).*—The clearance between the sides of the locking wedge and the locking lever should be equal within 0.003 inch when the selector arm is placed in its marking and spacing positions. To check, rotate the main shaft until the locking lever is on the low part of its cam. Move the selector arm first to its marking position and then to its spacing position and check the clearance. To adjust, position the selector arm stop detent eccentric post. Tighten the mounting screw while holding the post in position.

Note

When checking the MARKING position, make sure the selector arm operating screw does not interfere with the movement of the selector arm.

(14) SELECTOR ARM STOP DETENT SPRING TENSION. *(See figure 7-30.)*—A tension of 4 to 5 ounces (6¾ to 7¾ ounces for 100-wpm spring) should be required to pull the stop detent spring to its position length. To check, unhook the spring from the top separator plate and hook an eight-ounce scale in the spring eye. Pull in line with the spring and note the tension when the spring reaches its position length.

(15) SELECTOR LEVER SPRING TENSION. *(See figure 7-29.)*—A tension of 6 to 10 ounces should be required to move the selector levers off their cams. To check, place the code bars in the MARKING position and the main bail in its highest position. Move the swords manually to the SPACING position. Hook a 32-ounce scale over the selector lever at the selector cam sleeve and pull radially to the main shaft. Note the tension as the lever moves off its cam. Check each lever.

Note

Before checking the tension of the selector lever springs, make certain the selector levers are free and without bind.

(16) SELECTOR MAGNET BRACKET POSITION ADJUSTING ARM. *(See figure 7-31.)*—There should be a clearance of 0.058 to 0.065 inch between the armature lever and the face of the tooth on the armature lever cam. To check, turn the main shaft to its stop position and rotate the selector cam sleeve until the locking lever drops off the high side of its cam. Rotate the cam sleeve backward until the locking lever engages its cam and stops the rotation of the cam sleeve, then check the clearance. To adjust, loosen the selector magnet bracket mounting screws and the selector magnet bracket adjusting arm mounting screws enough to make the bracket and adjusting arm friction tight. Insert the No. 90783 adjusting wrench in the hole above the end of the adjusting arm and position the selector magnet bracket by rotating the wrench. Tighten the bracket and adjusting arm mounting screws.

Note

When checking the above adjustment, hold the armature lever approximately 0.045 inch off the bottom of the notch of its cam.

(17) SELECTOR MAGNET BRACKET. *(See figure 7-27.)*—When the selector magnet is energized, the clearance between the selector arm operating screw and selector arm should be 0.004 to 0.006 inch greater with the armature lever on the peak of its cam than when it is opposite an indent of its cam.

Note

When making the above adjustment, the selector arm should be kept in the MARKING position.

(*a*) To adjust, de-energize the selector magnet and rotate the selector cam sleeve until the armature lever is resting on the peak of the armature lever cam

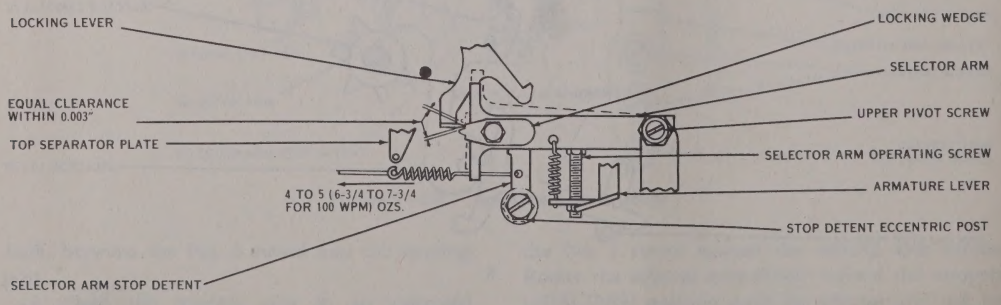

Figure 7—30. Selector Arm Stop Detent Eccentric and Spring Tension

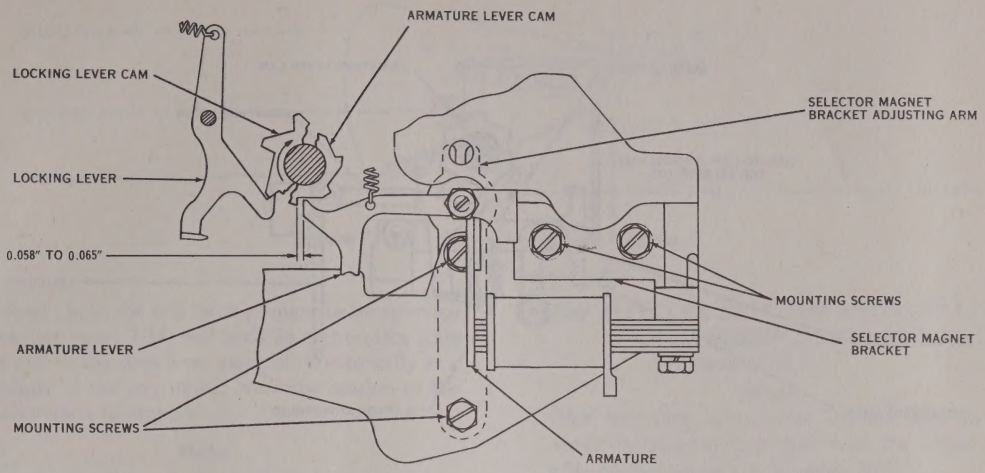

Figure 7—31. Selector Magnet Bracket

at the point where the lever moves the greatest distance. Loosen the selector magnet bracket mounting screws and, by its adjusting screw, rotate the bracket until the armature just touches the pole faces; then turn the adjusting screw an additional one-tenth revolution counterclockwise. This will press the armature firmly against the magnet cores.

(*b*) Energize the selector magnet and measure the clearance between the selector arm operating screw and selector arm, while the armature lever is on the peak of its cam. If there is no clearance, turn the operating screw to provide at least 0.004 inch. Rotate the selector cam sleeve until the armature lever is opposite an indent on its cam and again check the clearance. If the difference in the two clearances exceeds 0.006 inch, turn the magnet bracket adjusting screw clockwise. If the difference is less than 0.004 inch, turn the screw counterclockwise. Tighten the selector magnet bracket mounting screws and adjusting screw lock nut.

(18) ARMATURE LEVER SPRING. *(See figure 7-27.)*—A tension of 13 to 15 ounces (22 to 26 ounces for 100-wpm spring) should be required to pull the armature lever spring to its position length. However, if a distortion test set is available, the spring tension should be set at the optimum value within limits of 13 to 24 ounces. To check, unhook the armature lever spring from its spring arm and rotate the main shaft until the armature lever is on a peak of its cam. Hook a 32-ounce scale in the spring eye and note the tension as the spring is stretched to its position length. To adjust, loosen the mounting nut and position the spring arm.

(19) SELECTOR ARM OPERATING SCREW. *(See figure 7-32.)*—There should be a clearance of 0.003 to 0.006 inch between the selector arm operating screw and selector arm. To check, energize the selector magnet and rotate the selector cam sleeve until the armature lever is opposite an indent of its cam. To adjust, position the selector arm operating screw with its lock nut loosened.

(20) SELECTOR ARM SPRING. *(See figure 7-33.)*—A tension of 1¼ to 1¾ ounces (1¾ to 2¼ ounces

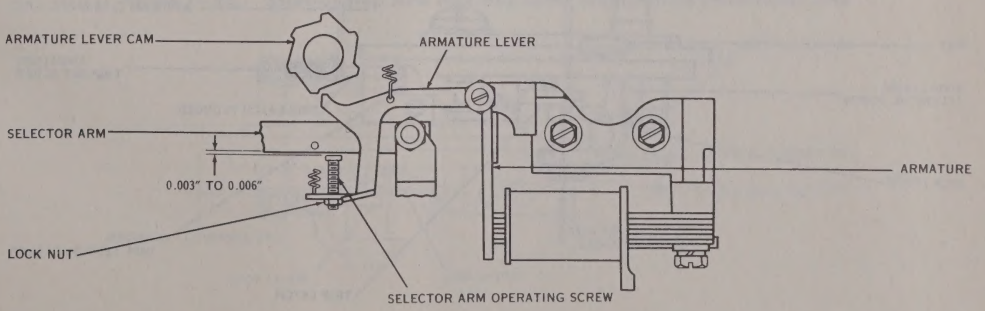

Figure 7—32. Selector Arm Operating Screw

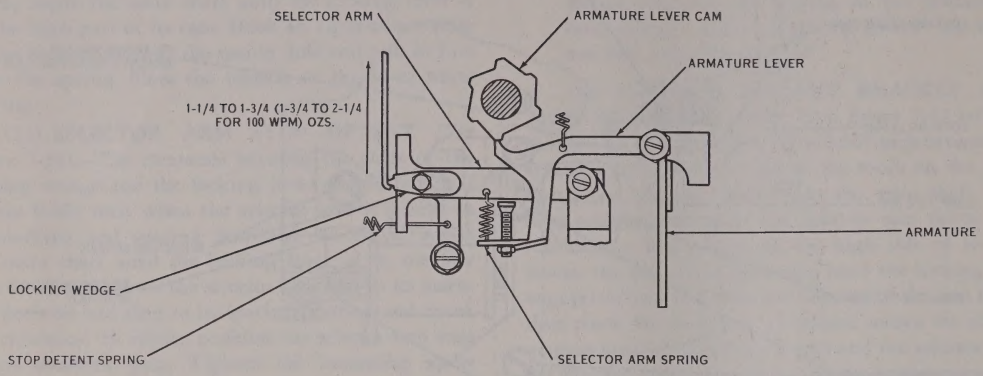

Figure 7—33. Selector Arm Spring

for 100-wpm spring) is needed to start the selector arm moving. To check, unhook the selector arm detent spring and rotate the main shaft until the armature lever is on a peak of its cam. Hold the locking lever away from the locking wedge and hook an eight-ounce scale over the end of the locking wedge and pull parallel to the selector arm spring. Note the tension as the selector arm starts to move. To adjust, re-form the outer loop of the selector arm spring.

CAUTION

Care should be taken not to nick, crimp, or otherwise damage the spring when re-forming the loops.

(21) STOP LEVER ECCENTRIC SCREW. *(See figure 7-34.)*—The stop lever on the rangefinder assembly should overtravel the latching face of the trip latch some, but not more than 0.006 inch. To adjust, loosen the retaining nut and position the stop lever eccentric screw. Hold the screw in position and tighten the nut.

(22) TRIP LATCH SPRING COMPRESSION. *(See figure 7-34.)*—A tension of 1 to 1½ ounces (3 to 3½ ounces for 100-wpm spring) should be required to start the trip latch moving. To check, hold the rangefinder assembly in a horizontal position and place the push end of an eight-ounce scale on the trip latch at a point as near the stop lever as possible. Hold the scale in a vertical position and push upward, noting the tension as the trip latch starts to move.

(23) STOP LEVER SPRING TENSION. *(See figure 7-35.)*—A tension of ¾ to 1¼ ounces should be required to start the stop lever moving.

Note

Make certain the stop lever eccentric has been adjusted before checking the above requirement.

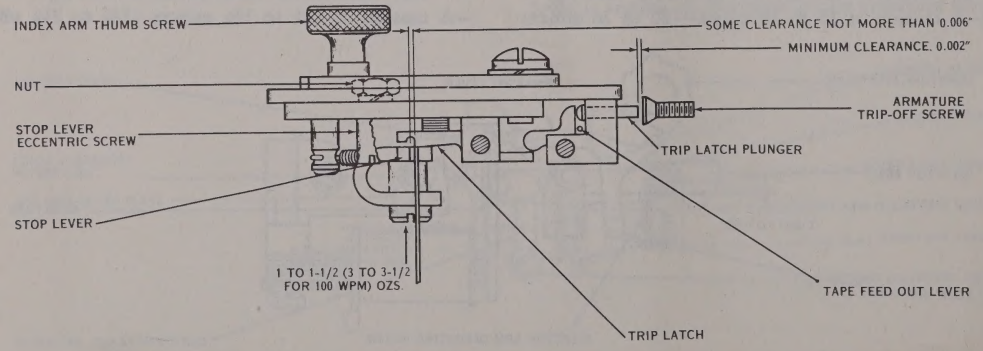

Figure 7—34. Stop Lever Eccentric, Trip Latch Spring Compression, and Trip-off Screw

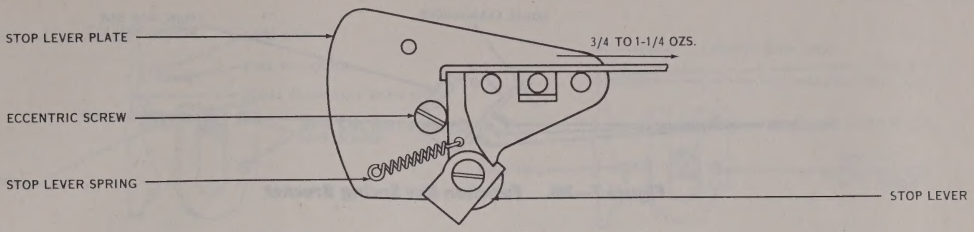

Figure 7—35. Stop Lever Spring Tension

To check, hold the trip latch plunger in its operated position (see figure 7-34) and hook an eight-ounce scale on the end of the stop lever and pull horizontally at a right angle to the stop lever. Note the tension as the stop lever starts to move.

Note

Replace the Rangefinder Assembly. In replacing the rangefinder, make certain that the tape feed-out lever fits under the left end of the trip-latch plunger; also avoid jamming the trip-latch plunger against the armature trip-off eccentric screw when remounting (see figure 7-37).

(24) SELECTOR STOP ARM AND STOP LEVER ENGAGEMENT POSITIONING LINK. *(See figure 7-36.)*

Note

The following adjustment applies only to those reperforators equipped with the adjustable range scale and positioning link.

The stop lever maximum overtravel, beyond the latching shoulder of the trip latch, should be at least half, but not more than the width of the stop lever. To check, place the selector magnet armature in the SPACING position and rotate the selector cam sleeve until the stop arm moves the stop lever to the maxi-

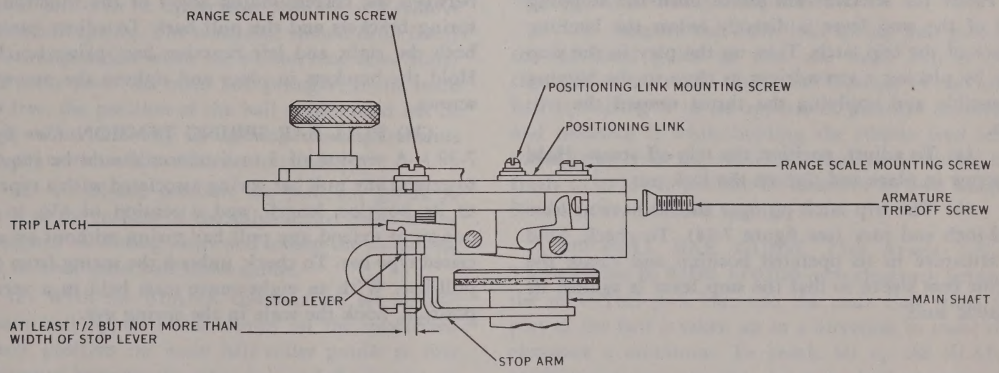

Figure 7—36. Selector Stop Arm and Stop Lever Engagement Positioning Link

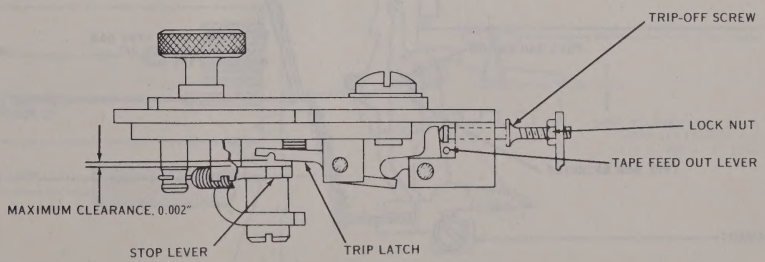

Figure 7—37. Trip Latch

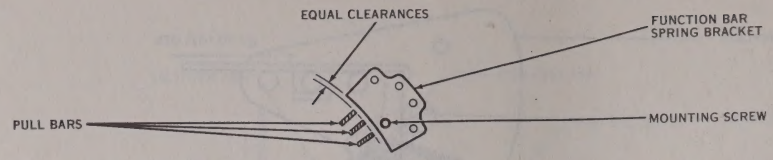

Figure 7—38. Function Bar Spring Bracket

mum of its overtravel. Check the overtravel with the range indicator set at 15, 60, and 105 on the range scale. To adjust, position the range scale assembly with its mounting screw and the positioning link mounting screw loosened just enough to hold them friction tight.

(25) TAPE FEED-OUT LEVER. *(See figure 7-37.)*—The tape feed-out lever should be free to rotate with a minimum amount of end play. To adjust, position the tape feed-out lever adjusting collar. Hold the collar in place and tighten the setscrew. This collar is located immediately under the tape feed-out lever.

(26) TRIP-OFF SCREW. *(See figures 7-37 and 7-34.)*—There should be some clearance, not more than 0.002 inch, between the trip latch and stop lever. To check, place the armature in its unoperated position and rotate the selector cam sleeve until the stopping edge of the stop lever is directly below the latching surface of the trip latch. Take up the play in the stop lever by placing a screwdriver as close to the bearing as possible and applying the thrust toward the trip latch.

(*a*) To adjust, position the trip-off screw. Hold the screw in place and tighten the lock nut.

(*b*) The trip latch plunger should have at least 0.002-inch end play (see figure 7-34). To check, hold the armature in its operated position and rotate the selector cam sleeve so that the stop lever is against its eccentric stud.

(*c*) The requirements in subparagraph (*b*) above serve as a check on the trip-off screw adjustment and the selector magnet bracket adjustment. Refine these adjustments if necessary.

Note

The above adjustment is the last of the Holding Magnet Selector adjustments. To measure the pull bar spring tension or adjust the function bar spring brackets it is necessary to remove the type basket assembly as described in paragraph 8. *b.* (4) (*f*).

(27) FUNCTION BAR SPRING BRACKETS. *(See figure 7-38.)*—The pull bars supported by the function bar spring brackets should be free and without bind. There should be approximately equal clearance between the corresponding edges of the function bar spring brackets and the pull bars. To adjust, position both the right and left function bar spring brackets. Hold the brackets in place and tighten the mounting screws.

(28) PULL BAR SPRING TENSION. *(See figure 7-39.)*—A tension of 3 to 4 ounces should be required to extend any pull bar spring associated with a type bar to its position length, and a tension of 5½ to 6¾ ounces to extend any pull bar spring without an associated type bar. To check, unhook the spring from each pull bar. With an eight-ounce scale held in a vertical position, hook the scale in the spring eye.

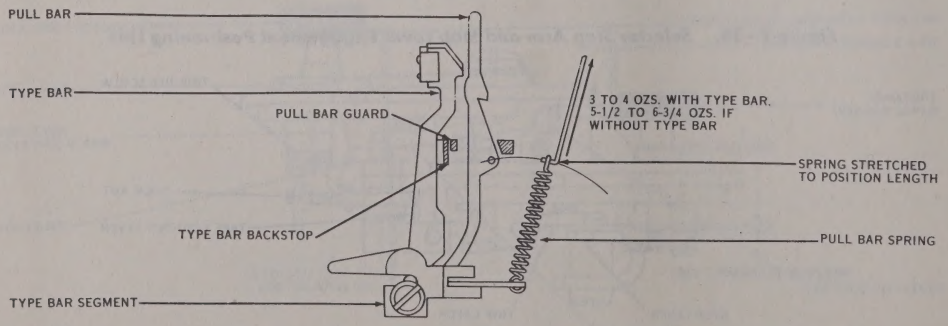

Figure 7—39. Pull Bar Spring Tension

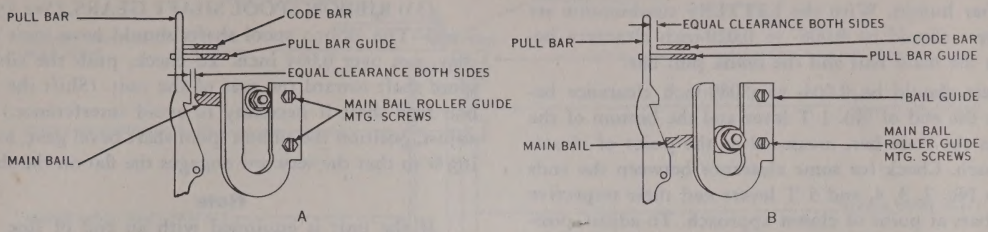

Figure 7—40. Main Bail Roller Guide

Note

For adjustments of pull bar springs that are attached to either function bar bracket, see right and left function pull bar spring bracket adjustments.

(29) MAIN BAIL GUIDES. *(See figure 7-40.)*— The main bail should be free throughout its travel and the roller guides should be positioned so that the requirements specified in subparagraphs (30) PULL BAR GUIDE, (31) MAIN BAIL ADJUSTING SCREW (PRELIMINARY), and (60) MAIN BAIL ADJUSTING SCREW (FINAL) can be met.

(*a*) To check, position the main shaft so that the main bail is in its uppermost position and remove the main bail spring. The main bail should drop freely to its lower position when the ribbon feed lever roller is held away from the main bail plunger. If the main bail is free, the position of the bail guides need not be checked unless difficulty in meeting the requirements of the adjustments above is encountered.

(*b*) To adjust, position the pull bar guide so that it is in the middle of the adjustments provided by its elongated mounting holes and loosen the mounting screws in each main bail roller guide.

(*c*) With the BLANK combination set up and the main bail opposite the humps on the unselected pull bars, position the main bail roller guides so that the clearance between the main bail and the humps on the LETTERS and FIGURES pull bars is approximately equal. Tighten the upper mounting screw of the right-hand guide so that the guide is friction tight.

(*d*) With the main bail roller on the high part of its cam, shift the main bail roller guides, if necessary, so that the clearance between the code bars and the LETTERS and FIGURES pull bars is approximately equal. (It may be necessary to advance the main bail adjusting screw to obtain clearance between the pull bars and code bars.) Tighten the lower mounting screw of the right-hand main bail roller guide friction tight.

(*e*) Recheck adjustment (*c*) above and tighten both mounting screws in the right-hand guide after making any necessary readjustments.

(*f*) Remove the main bail spring and position the left-hand guide so that the main bail is free throughout its travel. Check the freeness of the main bail by raising it to its uppermost position manually, and releasing it while holding the ribbon feed lever roller away from the main bail plunger. It should fall freely to its lower position by means of its own weight. Replace the main bail spring.

(30) PULL BAR GUIDE. *(See figure 7-41.)*— There should be 0.008- to 0.020-inch clearance between the unselected pull bars and the main bail when the play of the bail is taken up in a direction to make this clearance a minimum. To check, set up the BLANK combination and position the main bail opposite the

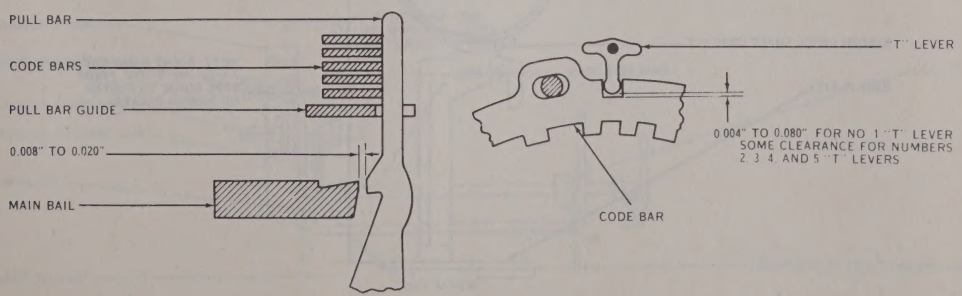

Figure 7—41. Pull Bar Guide

pull bar humps. With the LETTERS combination set up there should be 0.008- to 0.020-inch clearance between the main bail and the blank pull bar.

There should be 0.004- to 0.080-inch clearance between the end of No. 1 T lever and the bottom of the slot in the code bar, measured at the point of closest approach. Check for some clearance between the ends of the No. 2, 3, 4, and 5 T levers and their respective code bars at point of closest approach. To adjust, position the pull bar guide. Hold the guide in position and tighten the mounting screws.

(31) MAIN BAIL ADJUSTING SCREW (PRELIMINARY). *(See figure 7-25.)*—There should be 0.010- to 0.050-inch clearance between the unselected pull bars and the inner edge of the code bars when the play in the main bail and the pull bars is taken up in a direction to make this clearance a minimum. To check, alternately set up the BLANK and LETTERS combination and position the main bail roller on the high part of its cam. To adjust, position the main bail adjusting screw. Hold the screw in position and tighten the lock nut.

Note

Refer to subparagraph (60) for main bail adjusting screw (final adjustment).

(32) RIBBON SPOOL CUPS. *(See figure 7-42.)*—The center of the left-hand ribbon roller should be 4-11/16 to 4-13/16 inches from the reperforator base plate. The center of the right-hand ribbon roller should be 2-3/16 to 2-5/16 inches from the top surface of the tape guide. To adjust, loosen the lock nut and position the ribbon spool cup. Hold the cup in position and tighten the lock nut.

(33) RIBBON SPOOL SHAFT GEARS. *(See figure 7-43.)*—The ribbon spool shafts should have some end play, not over 0.004 inch. To check, push the ribbon spool shaft toward the rear of the unit. (Shift the ribbon feed shaft if necessary to avoid interference.) To adjust, position the ribbon spool shaft bevel gear, locating it so that the setscrew engages the flat on the shaft.

Note

If the unit is equipped with an end of line indicator mechanism or tape feed-out control mechanism, the required end play in the right-hand ribbon spool shaft should be obtained by positioning the rear collar.

(34) RIBBON SPOOL SHAFT BRACKETS. *(See figure 7-43.)*—The ribbon spool shaft brackets should align with the edges of the base plate and there should be a minimum amount of backlash between the bevel gears on the ribbon spool shafts and ribbon feed shaft. To check, move the ribbon feed shaft to its extreme left- and right-hand positions and check the backlash throughout a complete revolution. To adjust, position the ribbon spool shaft brackets.

Note

If the unit is equipped with an end of line indicator mechanism or a tape feed-out counter mechanism, the right-hand bracket should be adjusted so that the front edges of the spool cups are approximately aligned. Obtain the gear backlash by positioning the gear on the right-hand ribbon spool shaft.

(35) RIBBON SPOOL SHAFT COMPRESSION SPRING. *(See figure 7-43.)*—A tension of 2½ to 5 ounces should be required to start the ribbon spool

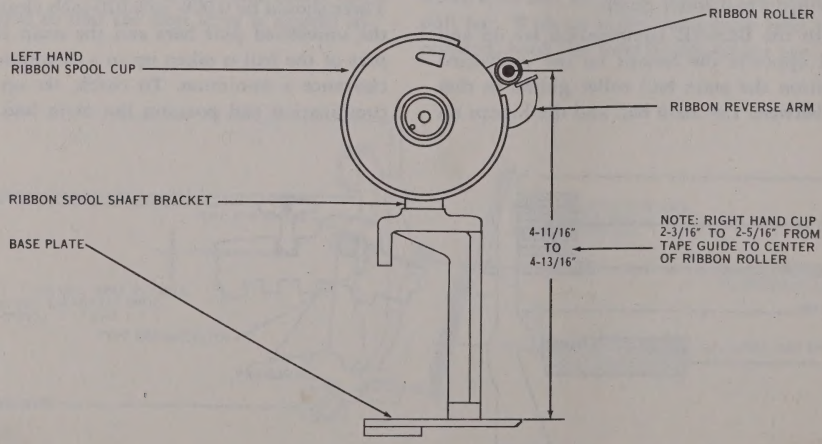

Figure 7—42. Ribbon Spool Cup

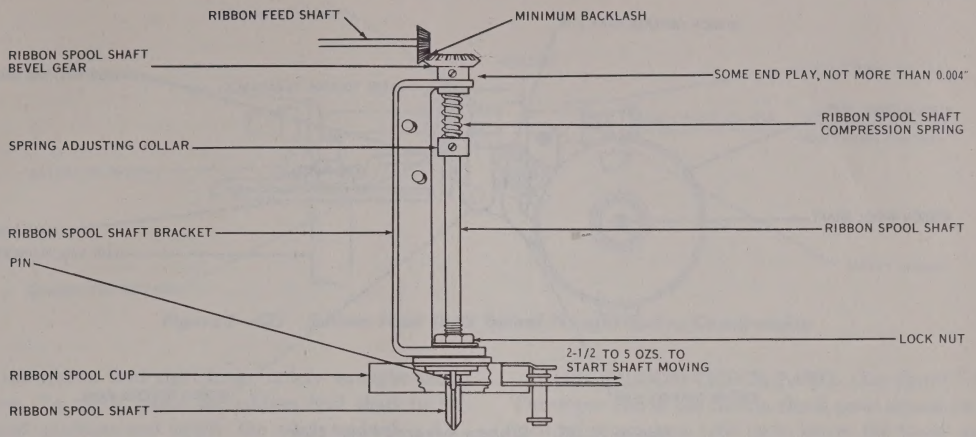

Figure 7—43. Ribbon Spool Shaft Gears and Bracket

shaft moving. To check, move the ribbon feed shaft to its left-hand position and hook an eight-ounce scale over the pin in the right ribbon spool shaft. Pull horizontally at right angle to pin and shaft and note the tension as the shaft moves. To adjust, position the spring collar and retighten the setscrew. Move the ribbon feed shaft to its right-hand position and adjust the left-hand spring in the same manner.

(36) RIBBON SPOOL SHAFT SLOTS.—The ribbon spools should be held firmly in place on the ribbon spool shafts. To adjust, spread the prongs at the end of the ribbon spool shafts.

Note

The following adjustments (subparagraphs (37) through (39)) apply to the Ribbon Reverse Mechanism.

(37) LEFT RIBBON REVERSE ARM SHAFT. *(See figure 7-44.)*—The front end of the left ribbon reverse arm shaft should clear the left ribbon spool cup by 0.005 to 0.025 inch. To check, hold the ribbon reverse arm against the bracket to make this clearance a minimum. To adjust, position the ribbon reverse arm on the shaft. Hold the arm in position and tighten the setscrew.

The left ribbon reverse arm shaft should have some end play, not more than 0.004 inch. To check, position the shaft so that the reverse arm is against the ribbon spool cup. To adjust, position the collar on the shaft. Hold the collar in position and tighten the setscrew. Position the collar so that the setscrew is accessible.

(38) RIGHT RIBBON REVERSE ARM SHAFT. *(See figure 7-44.)*—There should be some clearance, not more than 0.004 inch, between the front end of the right ribbon reverse arm shaft and the ribbon spool cup when the play of the shaft is taken up in a direction to make this clearance a maximum. To adjust, position the collar on the shaft. Hold the collar in position and tighten the setscrew. Position the collar so that the setscrew is accessible.

The rear of the slot in the right ribbon reverse arm should be in line with, or slightly behind, the rear flange on the ribbon spool cup roller. To adjust, position the reverse arm on the shaft. Hold the arm in position and tighten the setscrew.

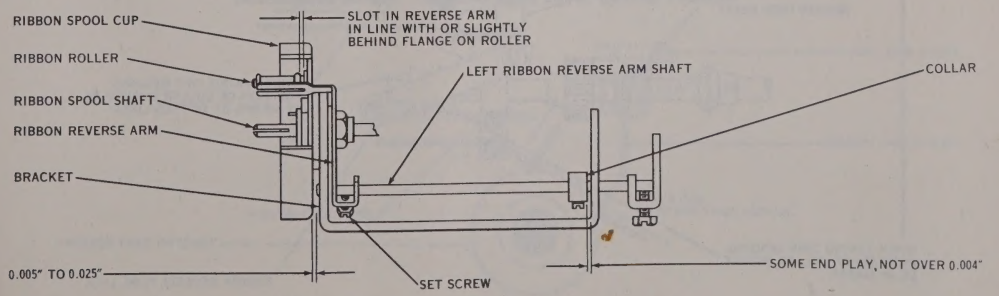

Figure 7—44. Ribbon Reverse Arm Shaft

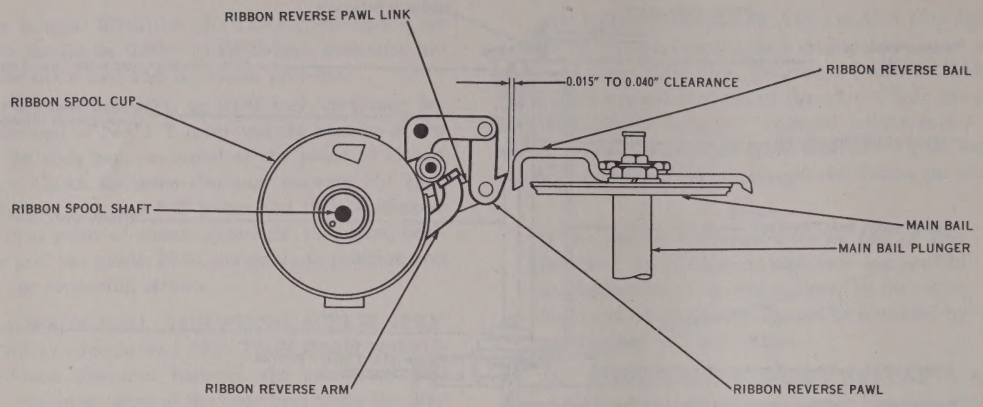

Figure 7—45. Ribbon Reverse Pawl Link

(39) RIBBON REVERSE PAWL LINK. *(See figure 7-45.)*—The ribbon reverse bail should clear the left or right ribbon reverse pawls by 0.015 to 0.040 inch when the ribbon reverse bail is positioned opposite the pawl. To check, position the ribbon reverse arm so that it is against the ribbon spool cup and check the clearance. When checking the 0.015-inch clearance between either reverse pawl, hold the ribbon reverse bail toward the pawl for minimum clearance. When checking the 0.040-inch clearance, hold the ribbon reverse bail away from the pawl for minimum clearance. To adjust, position the ribbon reverse arms on their shafts and make certain the ribbon reverse pawl links do not bind on their shoulder screws. Hold the arm in position and tighten the setscrew.

(40) RIBBON FEED SHAFT SAFETY SPRING COMPRESSION. *(See figure 7-46.)*—A tension of three to five pounds should be required to start the spring collar moving. To check, place the main bail in its extreme upper position and slide the ribbon feed shaft to its left-hand position. Apply the push end of a 12-pound scale to the upper end of the right ribbon reverse pawl and push downward. Note the tension as the spring collar starts to move. Slide the ribbon feed shaft to its right-hand position and check the left safety spring in the same manner.

Note

When checking the above spring tensions hold the ribbon feed shaft stationary.

Note

Remove the ribbon feed pawl and ribbon check pawl before starting the following two adjustments (see figure 7-49).

(41) RIBBON FEED SHAFT DETENT PLUNGER SPRING COMPRESSION. *(See figure 7-47.)*—A tension of 1½ to 3½ pounds should be required to

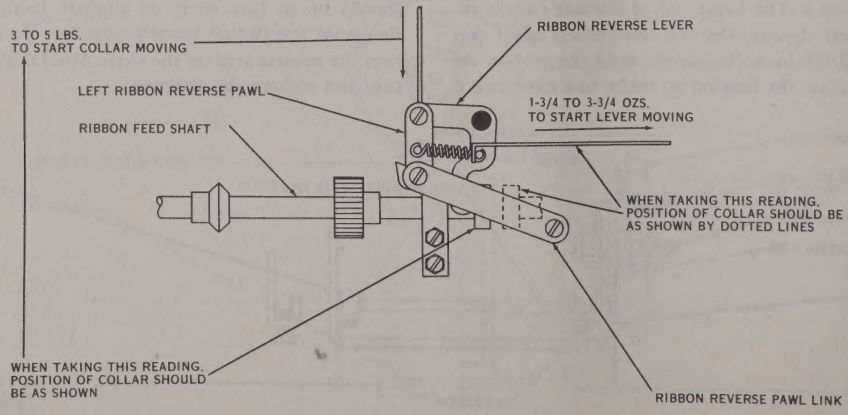

Figure 7—46. Ribbon Feed Shaft Safety Spring Compression and Reverse Pawl Spring Tension

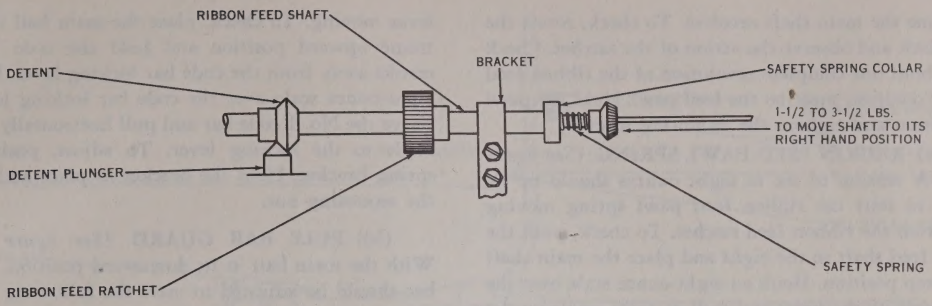

Figure 7—47. Ribbon Feed Shaft Detent Plunger Spring Compression

move the ribbon feed shaft from its left- to right-hand position. To check, place the ribbon feed shaft in its left-hand position and apply the push end of a 12-pound scale to the left end of the shaft and push in line with the shaft. Note the tension as the shaft moves across the detent plunger.

(42) RIBBON FEED LEVER SPRING TENSION. *(See figure 7-48.)*—A tension of 12 to 18 ounces should be required to start the ribbon feed lever moving. To check, position the ribbon feed lever roller in the plunger indent and hook a 32-ounce scale over the top of the ribbon feed lever. Pull horizontally toward the front of the unit and note the tension as the lever starts to move.

Note

Replace the ribbon feed pawl and ribbon check pawl.

(43) RIBBON CHECK PAWL. *(See figure 7-49.)*—The upper end of the ribbon check pawl should be 1/16 inch (plus or minus 1/64 inch) below the lower surface of the pull bar guide. To adjust, position the ribbon check pawl. Hold the pawl in position and tighten the mounting screw.

(44) RIBBON CHECK PAWL SPRING. *(See figure 7-49.)*—A tension of six to eight ounces should be required to start the ribbon check pawl moving away from the ratchet. To check, hook an eight-ounce scale over the end of the pawl. Pull at right angle to the pawl and note the tension as the pawl starts to move. Make certain the edge of the pawl is not binding in the ratchet when checking the tension. To adjust, bend the ribbon check pawl spring.

(45) RIBBON FEED PAWL. *(See figure 7-49.)*—The ribbon feed pawl should be positioned so that the ribbon feed ratchet will be advanced one or two teeth

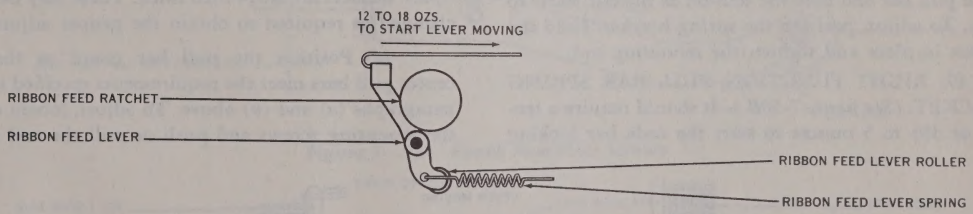
12 TO 18 OZS. TO START LEVER MOVING
RIBBON FEED RATCHET
RIBBON FEED LEVER
RIBBON FEED LEVER ROLLER
RIBBON FEED LEVER SPRING

Figure 7—48. Ribbon Feed Lever Spring Tension

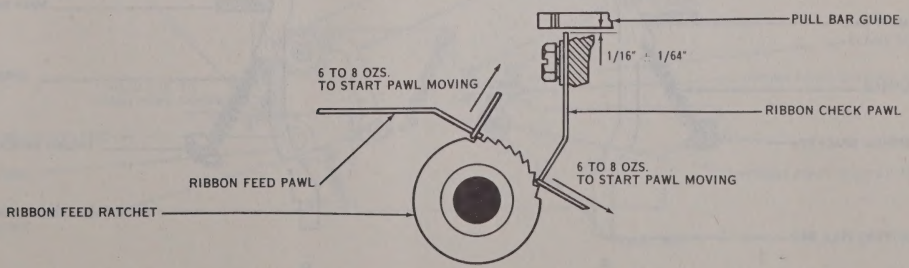
PULL BAR GUIDE
1/16" ± 1/64"
6 TO 8 OZS. TO START PAWL MOVING
RIBBON CHECK PAWL
RIBBON FEED PAWL
6 TO 8 OZS. TO START PAWL MOVING
RIBBON FEED RATCHET

Figure 7—49. Ribbon Check and Feed Pawl Springs

each time the main shaft revolves. To check, rotate the main shaft and observe the action of the ratchet. Check throughout one complete revolution of the ribbon feed shaft. To adjust, position the feed pawl. Hold the pawl in position and tighten the mounting screw.

(46) RIBBON FEED PAWL SPRING. *(See figure 7-49.)*—A tension of six to eight ounces should be required to start the ribbon feed pawl spring moving away from the ribbon feed ratchet. To check, push the ribbon feed shaft to the right and place the main shaft in its stop position. Hook an eight-ounce scale over the front edge of the pawl and pull at right angle to the pawl. Note the tension as the pawl moves away from the ratchet. Make certain the edge of the pawl is not binding in the ratchet when checking the tension. To adjust, bend the ribbon feed pawl spring.

(47) RIGHT AND LEFT RIBBON REVERSE PAWLS SPRING TENSION. *(See figure 7-46.)*—A tension of 1¾ to 3¾ ounces should be required to start the ribbon reverse lever moving. To check, move the ribbon feed shaft to its left-hand position and hook an eight-ounce scale over the spring post on the left ribbon reverse lever. Pull in line with the spring and note the tension as the lever starts to move. Move the feed shaft to its right-hand position and check the right spring in the same manner.

(48) LEFT FUNCTION PULL BAR SPRING BRACKET. *(See figure 7-50A.)*—A tension of 1 to 1½ ounces should be required to start the pull bar moving. To check, place the main bail in its extreme downward position and hook an eight-ounce scale over the LETTERS pull bar just below the hump. Pull at right angle to the pull bar and note the tension as the bar starts to move. To adjust, position the spring bracket. Hold the bracket in place and tighten the mounting nut.

(49) RIGHT FUNCTION PULL BAR SPRING BRACKET. *(See figure 7-50B.)*—It should require a tension of 3½ to 5 ounces to start the code bar locking lever moving. To check, place the main bail in its extreme upward position and hold the code bar bell cranks away from the code bar locking lever. Hook an eight-ounce scale over the code bar locking lever just above the No. 1 code bar and pull horizontally at right angle to the locking lever. To adjust, position the spring bracket. Hold the bracket in place and tighten the mounting nut.

(50) PULL BAR GUARD. *(See figure 7-51.)*—With the main bail in its downward position, the pull bar should be adjusted to meet the following requirements.

(*a*) With the type bar against the platen there should be some clearance (gauged by eye) between the end pull bars and pull bar guard.

(*b*) The same clearance should be obtained for pull bars not having type bars associated with them. To check, raise the pull bars by hand to a point where there is a minimum clearance between the pull bar and pull bar guard when the pull bar is in contact with the main bail. (Shift the platen to the proper position to permit raising the pull bar.)

(*c*) When the type bars are against their back stops, it should be impossible to remove the pull bars from their guide slots. If the pull bars can be removed from their slots, add washers under either side of guard as necessary. If the pull bars strike the guard when the type bars are on the platen, remove washers from under either side of the guard as necessary. There are two sizes washers available for making the proper adjustment; No. 7002 washers are 0.028-inch thick and No. 73427 washers are 0.014-inch thick. These may be interchanged as required to obtain the proper adjustment.

(*d*) Position the pull bar guard so that the center pull bars meet the requirements specified in subparagraphs (*a*) and (*b*) above. To adjust, loosen one of the mounting screws and push or pull the end of the

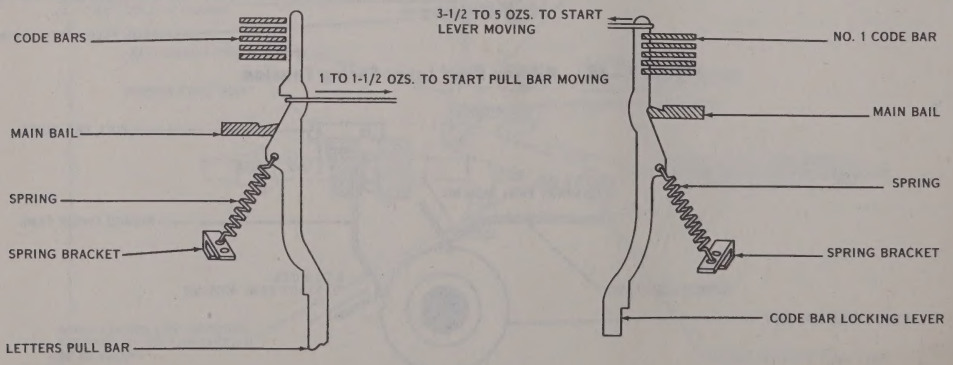

Figure 7—50. Function Pull Bar Spring Brackets

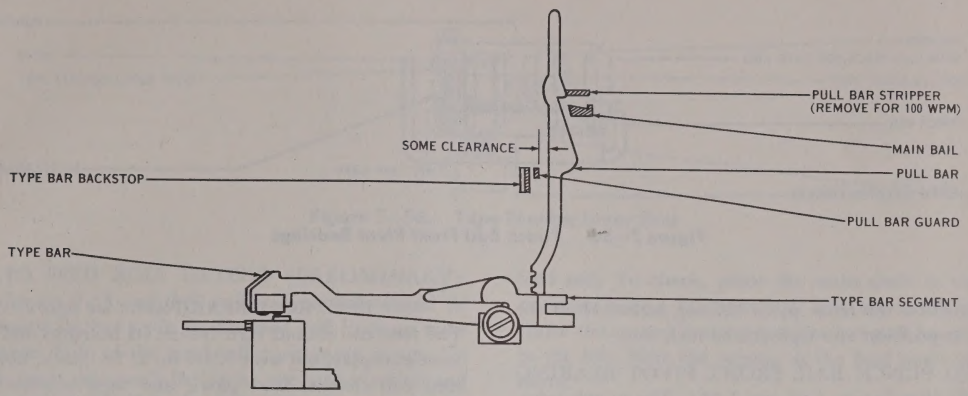

Figure 7—51. Pull Bar Guard

guard as required. Tighten the mounting screws and recheck adjustments (*a*), (*b*), and (*c*).

Note

Remove the pull bar stripper if unit is arranged for 100 word per minute operation (see figure 7-51).

(51) PUNCH ARM CASTING. *(See figure 7-52.)*—The clearance between the ends of the punch arm casting and the lock nuts of the pilot screws should be approximately equal. To adjust, position both pilot screws. Hold the pilot screws in position and tighten the lock nuts. The punch arm casting should have some end play, not over 0.005 inch. To adjust, position the front pilot screw. Hold the pilot screw in position and tighten the lock nut.

(52) PUNCH BAIL BEARINGS. *(See figures 7-53 and 7-54.)*—The punch bail should have some end play on its pivot bearing screws, not over 0.005 inch. To ad-

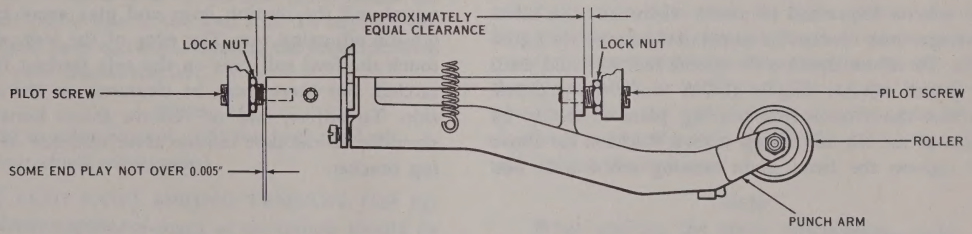

Figure 7—52. Punch Arm Pilot Screws

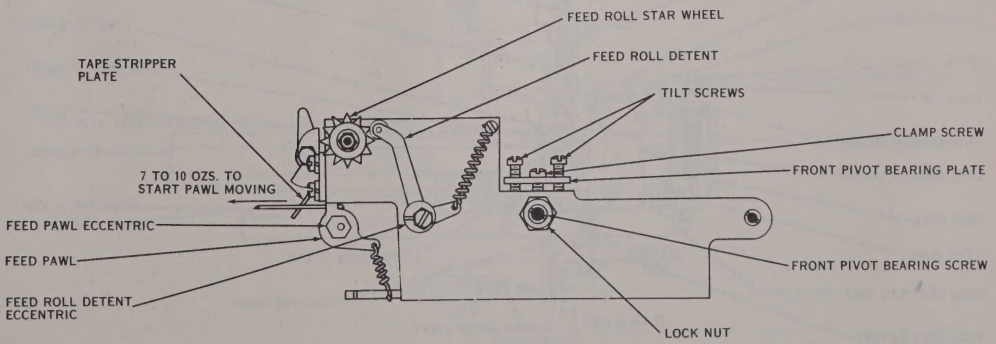

Figure 7—53. Tape Feed Pawl Spring Tension

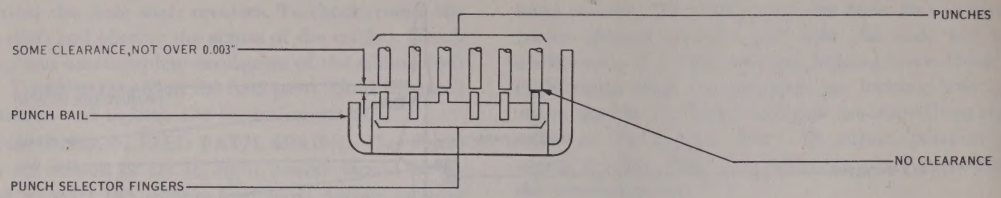

Figure 7—54. Punch Bail Front Pivot Bearings

just, position the front pivot bearing screw. Hold the screw in position and tighten the lock nut.

(53) PUNCH BAIL FRONT PIVOT BEARING PLATE. *(See figures 7-53 and 7-54.)*—The punch selector fingers should be positioned to meet the following requirements:

(*a*) As viewed from the left, with the punch selector fingers held against their respective punches, the outer edges of the front and rear fingers should be within the outer edges of their respective punches (see figure 7-54). To adjust, loosen the front pivot bearing screw lock nut and tilt the front pivot bearing plate to the left or right by means of the tilt and clamp screws (see figure 7-53).

(*b*) As viewed from the left, there should be some clearance, not more than 0.003 inch, between the rear selector finger and its punch when the front selector finger just touches its associated punch (see figure 7-54). To adjust, operate the punch bail by hand until the punch selector fingers almost touch the punches. Position the front pivot bearing plate vertically by means of the tilt and clamp screws. Recheck (*a*) above and tighten the front pivot bearing screw lock nut.

(54) FEED ROLL BEARINGS. *(See figure 7-55.)*—The feed roll should turn free in its bearings and have some end play, not over 0.004 inch. To check, hold the feed roll detent, feed pawl, and tape tension lever away from the feed roll and check the clearance. To adjust, first position the rear bearing bracket to provide freedom of rotation and then adjust the bearing bushing to provide the proper amount of end play.

(55) TAPE TENSION LEVER STUD. *(See figure 7-56.)*—The tape tension lever stud should be centrally located with respect to the feed roll pins. To check, take up the feed roll end play toward the star wheel and the tension lever end play toward its adjusting nut. The edge of the lever slot may touch the feed roll pins on the side nearest the ratchet but there must be clearance on the opposite side.

Take up the feed roll end play away from the star wheel and the tension lever end play away from the tension adjusting nut. The edge of the lever slot may touch the feed roll pins on the side farthest from the ratchet, but there must be clearance on the opposite side. To adjust, add or remove shims between the shoulder on the tape tension lever stud and its mounting bracket.

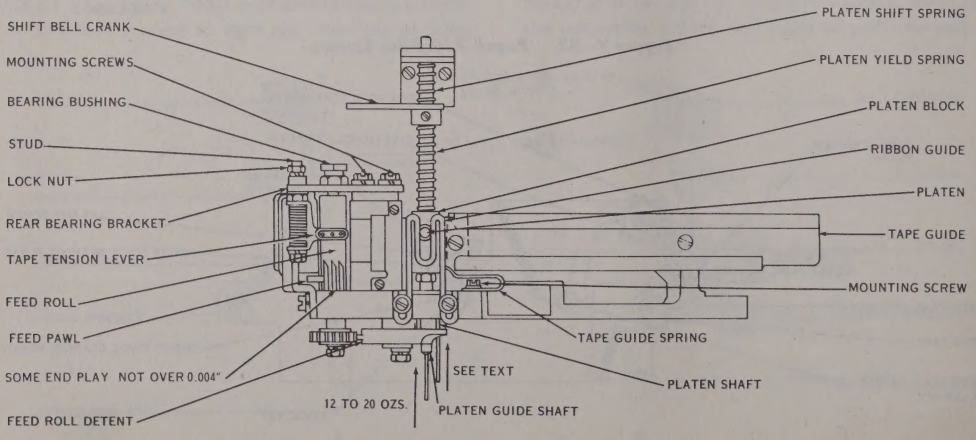

Figure 7—55. Feed Roll Bearings and Platen Shift and Yield Spring Tensions

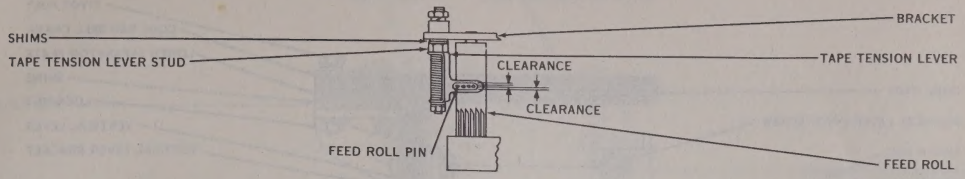

Figure 7—56. Tape Tension Lever Stud

(56) FEED ROLL DETENT (PRELIMINARY). *(See figures 7-53 and 7-57.)*—The feed roll should be positioned so that a pin on the feed roll lines up with the center hole of the food roll positioning gauge. To check, place the punch bail in its operated position and insert the No. 73517 feed roll positioning gauge in the punch block guide slot so that the projection on the gauge stops against the feed hole punch. To adjust, position the feed roll by means of the feed roll detent eccentric, locating the eccentric so that the high part is toward the left (see figure 7-53).

Note

Refer to subparagraph (65) for feed roll detent (final adjustment).

(57) FEED PAWL ECCENTRIC (PRELIMINARY). *(See figure 7-58.)*—When the punch arm cam roller is on the low part of its cam, the feed pawl should rest in the bottom of the first notch below the horizontal center line of the feed roll. To adjust, position the feed pawl eccentric, locating the eccentric with the high part toward the left.

Note

Refer to subparagraph (66) for feed pawl eccentric (final adjustment).

(58) FEED PAWL SPRING TENSION. *(See figure 7-53.)*—A tension of seven to ten ounces should be required to start the feed pawl moving away from the feed roll. To check, place the main shaft in the stop position, hook a 32-ounce scale over the feed pawl just above the curved bearing portion and pull horizontally to the left. Note the tension as the feed pawl starts to move.

Note

Springs connected to a feed pawl with a long spring hole extension should be in the right-hand notch of the spring post. Springs connected to pawls with short extensions should be in the left-hand notch of the spring post.

(59) CODE BAR BELL CRANKS. *(See figures 7-58 and 7-59.)*—The code bars should move freely between the code bar bell crank separator plates. To adjust, make certain the vertical bracket is mounted in a vertical position, then add or remove shims between the lower separator plate and the shoulder on the pivot post. Position the code bars for BLANK selection and rotate the main shaft until the right ends of the code bars and the edges of the code bar bell cranks are at a point of closest approach. The clearance at this point should be 0.010 to 0.050 inch. To adjust, loosen the pivot post lock nut and position the pivot post in the elongated mounting hole. Hold the post in position and tighten the lock nut.

Note

When making the above adjustments, make certain that the extension on each code bar

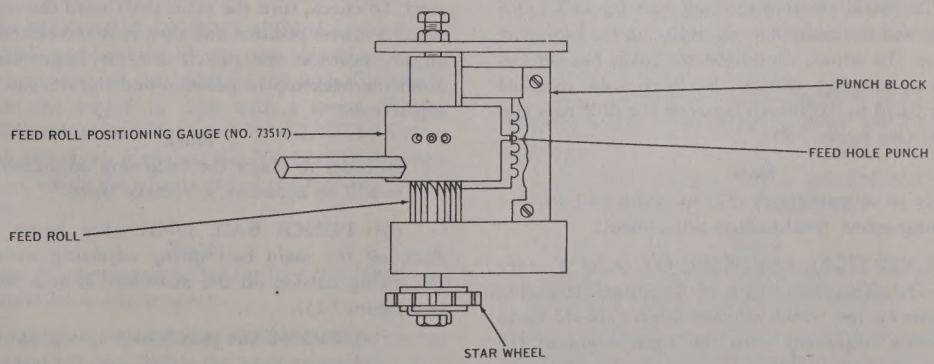

Figure 7—57. Feed Roll Detent

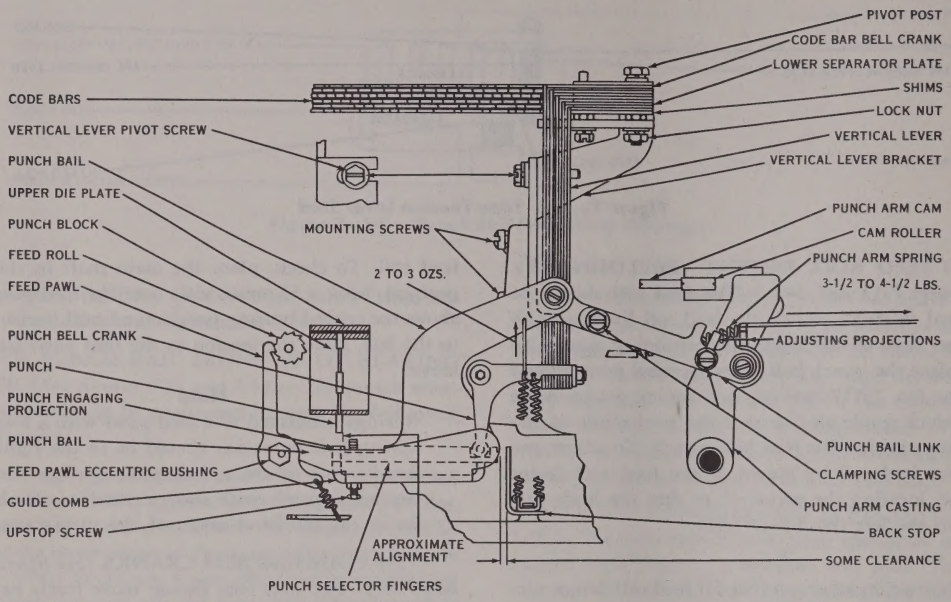

Figure 7—58. Feed Pawl Eccentric, Vertical Lever Pivot Screw, Punch Arm, and Punch Bell Crank Spring Tensions

bell crank fully engages the vertical lever but does not overlap sufficiently to interfere with the adjacent lever. Likewise, each code bar bell crank should fully engage the end of its vertical lever but the upper end of any vertical lever should not interfere with the free movement of the code bar bell crank immediately above.

(60) MAIN BAIL ADJUSTING SCREW (FINAL.) *(See figure 7-59.)*—There should be a minimum clearance of 0.010 inch between the front edges of the code bars and the adjacent edges of the code bar bell cranks. To check, position the code bars for LETTERS selection, and the main bail cam roller on the high part of its cam. To adjust, reposition the main bail adjusting screw, keeping within the previously specified limits of 0.010 to 0.050 inch between the pull bars and code bars (see figure 7-25).

Note

Refer to subparagraph (31) for main bail adjusting screw (preliminary adjustment).

(61) VERTICAL LEVER PIVOT SCREW. *(See figure 7-58.)*—The right edges of the punch engaging projections on the punch selector fingers should be in approximate alignment with the right edges of the punches. To check, position the code bars to the right (LETTERS combination) and turn the main shaft until the punch selector fingers raise flush with the bottom of the pins. Take up the play in the associated parts by pressing the punch selector fingers slightly to the left and check the alignment. To adjust, position the vertical lever pivot screw in its mounting slot.

(62) PUNCH SELECTOR FINGER BACKSTOP. *(See figure 7-58.)*—The left ends of the punch selector fingers should engage the guide comb in the left end of the punch bail by not less than one half the thickness of the comb. To check, hold the selector fingers to the right against the backstop. There should be some clearance between the punch selector fingers and backstop. To check, turn the main shaft until the main bail is in its lowest position and then note the clearance. To adjust, position the punch selector finger backstop. Hold the backstop in position and tighten the mounting screws.

Note

In order to check the following adjustments, it will be necessary to remake them.

(63) PUNCH BAIL LINK. *(See figure 7-58.)*—Back off the main bail spring adjusting screw until the spring tension on the main bail is at a minimum (see figure 7-25).

(*a*) Back off the punch bail upstop screw.

(*b*) Loosen the clamping screws of the punch bail link and adjust the length of the link by shifting

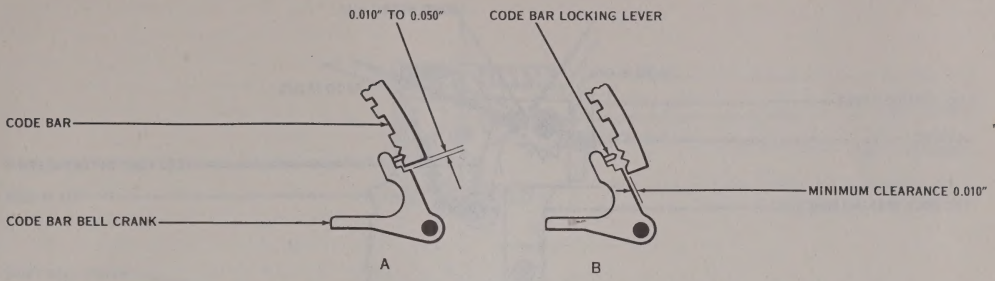

Figure 7—59. Code Bar Bell Crank and Main Bail Adjusting Screw

the adjusting projections with a screwdriver. When the LETTERS combination is selected and the unit is operated under power, the LETTERS combination should be perforated and the feed hole should be punched cleanly through the tape.

(*c*) Restore the main bail spring adjusting screw approximately to its former setting, and tighten its lock nut.

(64) PUNCH BAIL UPSTOP SCREW. *(See figure 7-58.)*—With the BLANK combination selected and the punch arm cam roller on the highest part of its cam, advance the upstop screw until an unperforated tape can be inserted in the punch block. Back off the upstop screw until the tape is just held friction tight between the feed hole punch and upper die plate. Back off the upstop screw an additional one-quarter turn and tighten the lock nut. Operate the unit under power with the LETTERS combination selected and determine whether or not the feed holes are cut cleanly. A clean cut hole should have a well defined hinged lid with no fibrous edges and with no appreciable tear at the hinged portion of the feed hole lid. A slight tear is permissible at the hinged portion of the code perforations. If the feed holes are nbt cleanly punched, a refinement of the punch bail link adjustment and punch bail upstop screw adjustment may be necessary.

(65) FEED ROLL DETENT (FINAL). *(See figure 7-57.)*—The perforations in the tape should meet the standard spacing of ten holes to the inch. To check, perforate the length of tape with a series of nine BLANK combinations followed by a LETTERS combination and check it against the No. 2215 tape gauge. To adjust, refine the adjustment of the feed roll detent eccentric.

Note

Refer to subparagraph (56) for feed roll detent (preliminary adjustment).

(66) FEED PAWL ECCENTRIC (FINAL). *(See figures 7-53 and 7-58.)*—With the high part of the feed pawl eccentric bushing toward the left and the tape tension lever resting against the feed roll, the feed pawl should rotate the feed roll one full tooth during the downward travel of the feed pawl. To check, proceed as follows:

(*a*) Rotate the main shaft until the feed pawl starts to engage a tooth on the feed roll. Hold the detent roller away from the star wheel and continue to turn the main shaft until the feed pawl is at the bottom of its travel. Allow the feed roll detent roller to just come in contact with the feed roll star wheel. The detent roller should not tend to move the star wheel in a clockwise direction and the clearance between the roller and the face of the star wheel tooth directly below should not exceed 0.035 inch. Repeat this check at four points on the star wheel approximately 90 degrees apart.

CAUTION

The feed pawl should not engage any tooth other than the first one above the horizontal centerline of the feed roll during a complete cycle. There must be a minimum clearance of 0.003 inch between the feed hole punch engaging projection and the feed hole punch and between the top edge of any punch selector finger and the associated code punch, when the feed pawl, in its downward travel, just engages the tooth above the horizontal centerline of the feed roll.

(*b*) To adjust, position the feed pawl eccentric bushing. Hold the bushing in place and tighten the locking screw.

(67) FEED-OUT ROLLER ECCENTRIC. *(See figures 7-52 and 7-58.)*

Note

The following adjustment applies only to the Receiver Group Typing Reperforator.

With the feed out roller on the high part of the feed cam, the tape should be clearly punched and there should be some clearance between the punch upstop

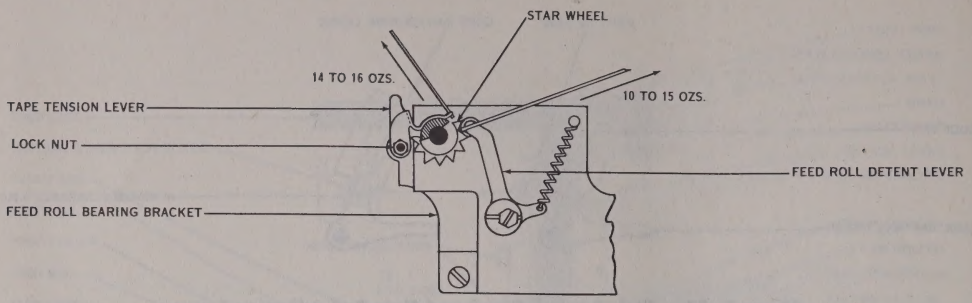

Figure 7—60. Tape Tension Lever Spring and Feed Roll Detent Lever Spring Tension

screw and its stop, as indicated by some play between the feed out roller and the feed out cam when the punch arm is manually pulled against its spring tension. To adjust, position the feed out roller eccentric (lower roller on the punch arm) with its lock nut loosened. If necessary, refine the "Punch Bail Upstop Screw" adjustment. Operate the Automatic Tape Feed-out Mechanism under power to recheck for clearly punched tape.

(68) TAPE STRIPPER PLATE. *(See figure 7-53.)* —There should be some clearance, not over 0.010 inch, between the upper edge of the tape stripper plate and the feed roll. Check throughout a complete revolution of the feed roll. To adjust, position the stripper plate. Hold the plate in position and tighten the mounting screws.

Note

In some units the tape chute serves as a tape stripper plate. In such cases, adjust the tape chute to meet the above requirements.

(69) TAPE TENSION LEVER SPRING. *(See figure 7-60.)*—A tension of 14 to 16 ounces should be required to start the slotted extension of the tape tension lever moving away from the feed roll. To check, hook a 32-ounce scale over the end of the slotted extension and pull at right angle to the lever. To adjust, rotate the tape tension lever stud clockwise or counterclockwise as required. Hold the stud in position and tighten the lock nut.

Note

The above spring tension applies only to units having the new 110974 spring with 15 turns rather than the spring with 18 turns formerly used.

(70) SHIFT ROCKER POST. *(See figure 7-61.)*— The sides of the shift rocker post should be parallel to the platen shaft. To adjust, loosen the shift rocker post lock nut and rotate the post. Hold the post in position and tighten the lock nut.

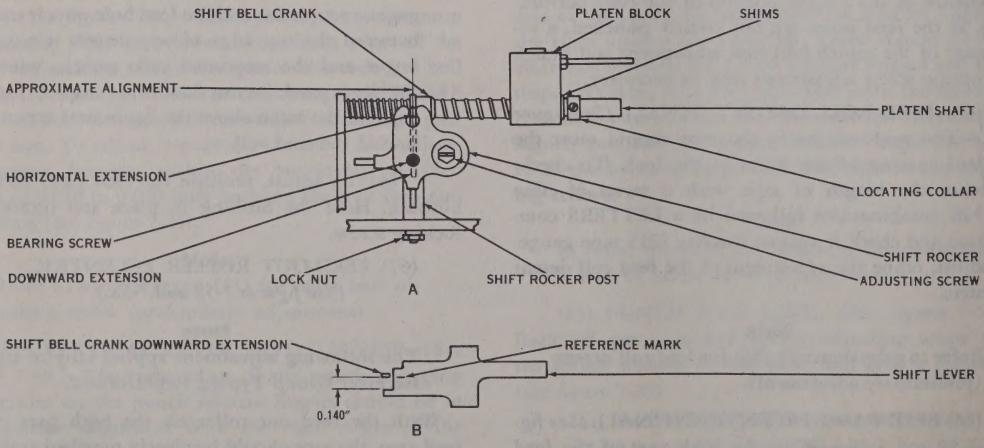

Figure 7—61. Platen Shift Rocker Post and Shift Bell Crank

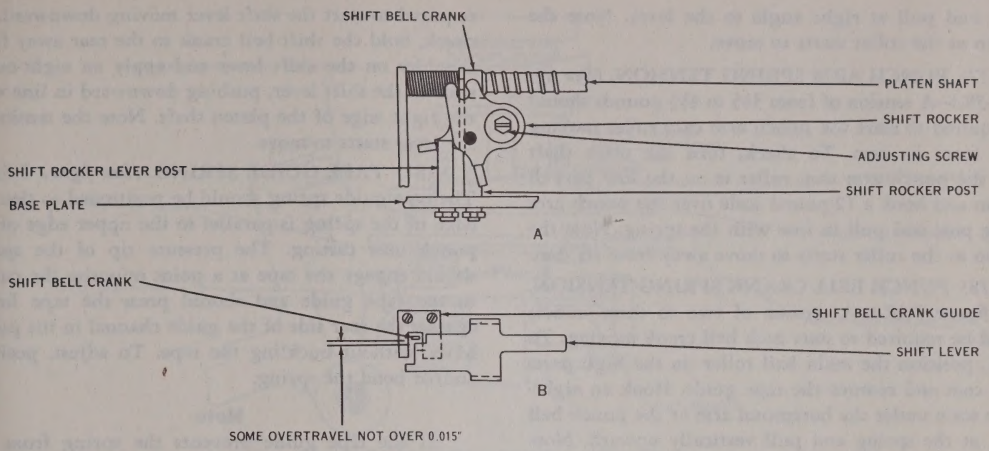

Figure 7–62. Shift Rocker Lever Post, Shift Bell Crank Guide, and Shift Rocker

(71) SHIFT ROCKER LEVER POST. *(See figure 7-62.)*—The front surface of the shift rocker lever post should be parallel to the front edge of the base plate. To adjust, rotate the shift rocker lever post. Hold the post in position and tighten the lock nut.

(72) SHIFT BELL CRANK. *(See figure 7-61.)*—The horizontal extension of the shift bell crank should line up approximately with the vertical center line through the shift rocker bearing screw. To check, position the platen shaft so that the front edge of the downward extension of the shift bell crank is opposite the mark on top of the shift lever. To adjust, bend the horizontal extension of the shift bell crank.

Note

Some of the early shift levers were not marked. The mark should be located 0.140 inch to the rear of the forward shoulder.

(73) SHIFT BELL CRANK GUIDE. *(See figures 7-61 and 7-62.)*—The platen assembly should shift freely in the shift bell crank guide slot and the printing face on the platen should be approximately horizontal. To adjust, position the shift bell crank guide. Hold the guide in place and tighten the mounting screw.

(74) SHIFT ROCKER. *(See figure 7-62.)*—The vertical end of the shift bell crank should overtravel the rear shoulder of the shift lever by some, not more than 0.015 inch, when the play in the shift lever is taken up toward the rear of the unit. To check, set the main bail spring at its operation tension (14 to 15 pounds) and place a 0.156-inch spacer (5/32-inch wrench No. 125775) between the main bail spring adjusting lever and spring adjusting screw so that the other end of the adjusting lever rests against the selector mounting plate (see figure 7-25). Move the platen assembly to its forward (FIGURES) position and select the LETTERS* pull bar. Rotate the main shaft until the shift bell crank is in its rearmost position. Locate this position by rocking the motor shaft clockwise and counterclockwise while observing the shift bell crank. Check the clearance. To adjust, position the shift rocker. Hold the shift rocker in position and tighten its adjusting screw and then remove the spacer (wrench).

***Note**

On units equipped with "unshift on space" pull bars, select both the LETTERS and SPACE combination in succession and observe which pull bar gives the shift bell crank the least travel; select this combination to make the shift rocker adjustment.

(75) RIBBON GUIDE. *(See figure 7-55.)*—The ribbon should be centrally located with respect to any type pallet. To adjust, position the ribbon guide to the front or rear as required.

(*a*) The height of the ribbon guide should be such that the ribbon is held approximately 1/32 inch above the tape. To adjust, bend the ribbon guide adjacent to the main casting.

(*b*) In operation the ribbon should remain central with respect to the type pallets, and the rear edge of the ribbon should not curl. To adjust, bend the forward end of the lower part of the ribbon guide upward.

(76) FEED ROLL DETENT LEVER SPRING TENSION. *(See figure 7-60.)*—A tension of 10 to 15 ounces should be required to start the detent lever roller moving away from the star wheel. To check, hook a 32-ounce scale over the detent lever at the

roller and pull at right angle to the lever. Note the tension as the roller starts to move.

(77) PUNCH ARM SPRING TENSION. *(See figure 7-58.)*—A tension of from 3½ to 4½ pounds should be required to start the punch arm cam roller moving away from its cam. To check, turn the main shaft until the punch arm cam roller is on the low part of its cam and hook a 12-pound scale over the punch arm spring post and pull in line with the spring. Note the tension as the roller starts to move away from its cam.

(78) PUNCH BELL CRANK SPRING TENSION. *(See figure 7-58.)*—A tension of two to three ounces should be required to start each bell crank moving. To check, position the main bail roller on the high parts of its cam and remove the tape guide. Hook an eight-ounce scale under the horizontal arm of the punch bell crank at the spring and pull vertically upward. Note the tension as the bell crank starts to move.

(79) PLATEN SHIFT SPRING TENSION. *(See figures 7-55 and 7-61.)*—A tension of 5 to 7½ ounces should be required to start the shift bell crank extension moving away from the rear shoulder of the shift lever. To check, move the platen to the LETTERS position and apply the push end of a 64-ounce scale to the front end of the platen shaft and push horizontally toward the rear (see figure 7-55). Note the tension as the shift bell crank extension starts to move. If these specifications are not met, replace spring.

(80) PLATEN YIELD SPRING TENSION. *(See figure 7-55.)*—A tension of 12 to 20 ounces should be required to start the platen block moving on the platen shaft. To check, hold the platen shaft in its extreme rear position and place the push end of a 64-ounce scale on the front end of the platen guide shaft and push horizontally toward the rear. Note the tension as the platen block starts to move on the shaft.

(81) SHIFT LEVER SPRING TENSION. *(See figure 7-63.)*—A tension of ½ to 1½ ounces should be required to start the shift lever moving downward. To check, hold the shift bell crank to the rear away from shoulder on the shift lever and apply an eight-ounce scale to the shift lever, pushing downward in line with the right edge of the platen shaft. Note the tension as the lever starts to move.

(82) TAPE GUIDE SPRING. *(See figure 7-55.)*—The tape guide spring should be positioned so that the edge of the spring is parallel to the upper edge of the punch unit casting. The pressure tip of the spring should engage the tape at a point opposite the cutout in the tape guide and should press the tape firmly against the rear side of the guide channel in the punch block without buckling the tape. To adjust, position and/or bend the spring.

Note

If the tape guide prevents the spring from pressing the tape against the side of the guide channel in the punch block, add shims between the tape guide mounting post and the perforator main bracket. Maintain clearance between the rear edge of the tape guide and punch bail.

(83) FIGURES PULL BAR. *(See figure 7-63.)*—There should be 0.010- to 0.020-inch clearance between the toe on the figures pull bar extension and the shift lever. To check, disengage the main shaft clutch and latch the shift bell crank in the LETTERS position. To adjust, position the FIGURES pull bar extension. Hold the extension in place and tighten the mounting screws.

(84) MAIN BAIL SPRING. *(See figure 7-25.)*—The printing blow (that is, the force with which the type bars strike the platen and the force required for shifting the platen shaft assembly from the FIGURES to the LETTERS position) should be sufficient to print good copy and obtain dependable operation. Start the motor and send alternate LETTERS and FIGURES combinations to the reperforator. To adjust, back off

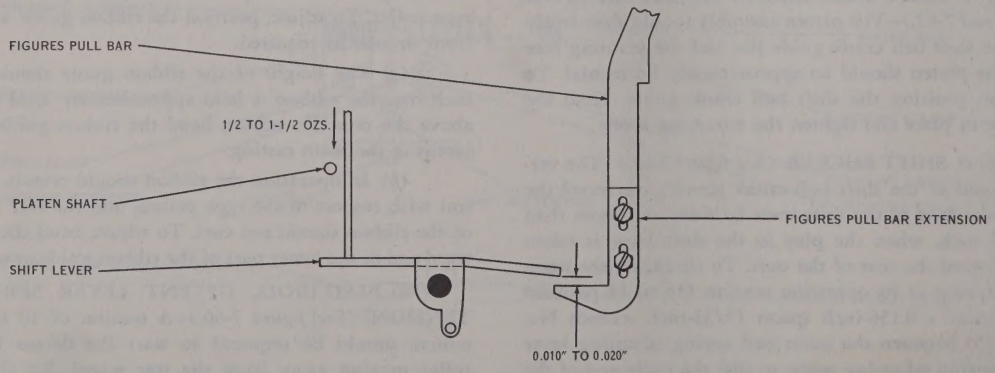

Figure 7—63. Figures Pull Bar

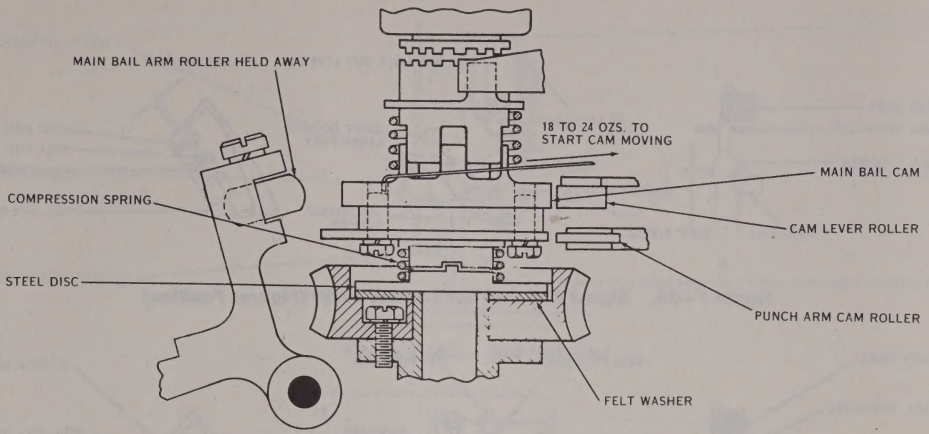

Figure 7—64. Main Bail Cam Clutch Torque

the main bail spring adjusting screw until the platen fails to return to the LETTERS position. Then turn the screw in a clockwise direction until the platen just moves to the LETTERS and FIGURES positions without any failures. Turn the screw clockwise an additional 1½ turns and tighten the lock nut. With the main shaft clutch disengaged and a 25-pound scale hooked to the main bail spring adjusting lever directly below the spring, it should require a maximum tension of 15½ pounds to start the spring adjusting lever moving.

(85) MAIN BAIL CAM CLUTCH TORQUE. *(See figure 7-64.)*—A tension of 18 to 24 ounces should be required to start the main bail cam moving opposite to its normal rotation. To check, allow the motor to warm up for at least ten minutes with the main bail cam stationary. Press downward on the main bail so as to move the main bail cam roller away from its cam and, at the same time, hold the cam lever roller (if present) and the punch arm cam roller away from their cams; hook a 32-ounce scale into the screw hole on top of the main bail cam. Pull at right angle to the radius and note the tension as the cam starts to move.

Note

For field maintenance purposes the torque may drop to 12 ounces minimum before readjustments or replacements of parts are required.

(86) SELECTOR CLUTCH. *(See figure 7-65.)*—A tension of 14 to 18 ounces (16 to 22 ounces for 100-wpm springs) should be required to hold the selector cam sleeve stationary while the shaft is running. To check, allow the motor to warm up for at least ten minutes with the cam sleeve held stationary. Hook a 32-ounce scale to the selector cam sleeve stop arm and pull at right angles to the stop arm. To adjust, position the capstan nut with a screwdriver.

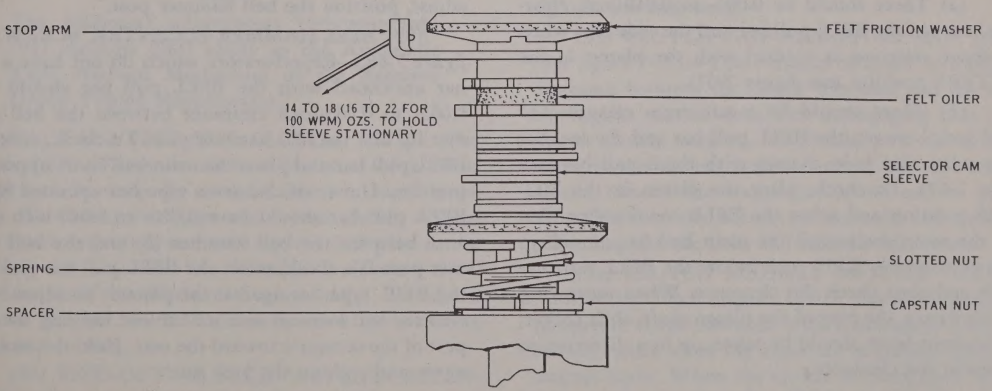

Figure 7—65. Selector Clutch

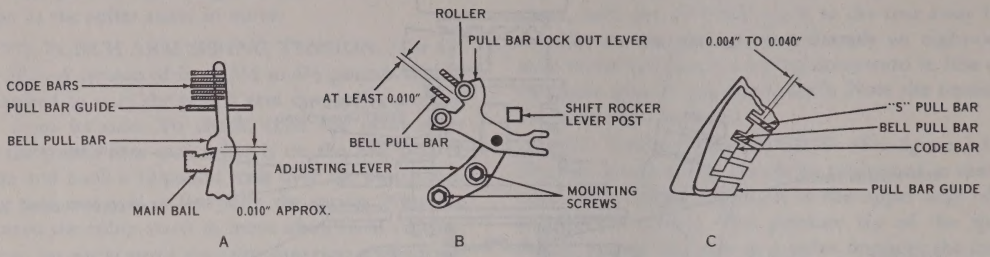

Figure 7—66. Signal Bell Pull Bar Lockout Lever (Figures Position)

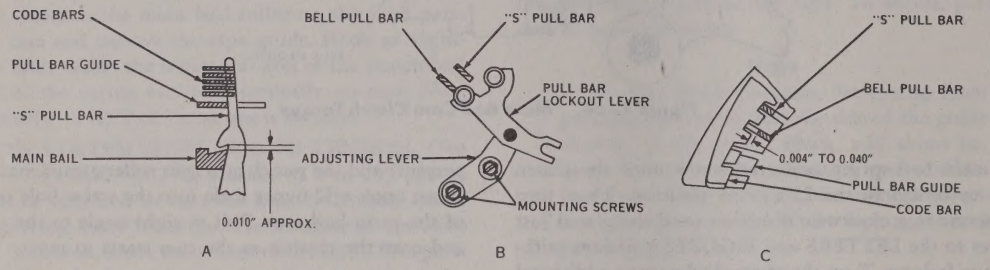

Figure 7—67. Signal Bell Pull Bar Lockout Lever (Letters Position)

Note

The following adjustments (subparagraph (87) through (90)) apply to the signal bell mechanism.

(87) PULL BAR LOCKOUT LEVER. *(See figures 7-66 and 7-67.)*—There should be 0.004- to 0.040-inch clearance between the S pull bar and the code bars. To check, place the platen in the FIGURES position, and select the BLANK combination. Rotate the main shaft until the main bail is in its uppermost position and check the clearance.

(*a*) There should be 0.004- to 0.040-inch clearance between the BELL pull bar and the code bars when the above selection is applied with the platen in the LETTERS position (see figure 7-67).

(*b*) There should be a minimum clearance of 0.010 inch between the BELL pull bar and the lockout lever roller that is in contact with the S pull bar (see figure 7-67). To check, place the platen in the FIGURES position and select the BELL combination. Rotate the main shaft until the main bail has moved up to approximately 0.010 inch below the BELL pull bar notch and then check the clearance. When measuring this clearance, the play of the platen shaft, shift rocker, and lockout lever should be taken up in a direction to minimize the clearance.

(*c*) To adjust, position the adjusting lever. Hold the lever in position and tighten the mounting screws.

Note

An increase in pull bar clearance increases the load on the platen shift return spring. The platen shift mechanism should be rechecked manually for correct operation.

(88) BELL HAMMER POST. *(See figure 7-68.)*—The tip of the BELL pull bar toe should be in line with the outside surface of the bell hammer. To check, select the BELL pull bar and position the main bail at its highest point. Hold the bell hammer spring to one side and sight along the side of the bell hammer. To adjust, position the bell hammer post.

(89) BELL HAMMER ECCENTRIC SCREW. *(See figure 7-68.)*—Reperforators which do not have a type bar associated with the BELL pull bar should have 0.065- to 0.085-inch clearance between the bell hammer lip and the bell hammer post. To check, select the BELL pull bar and place the main bail in its uppermost position. Units which have a type bar operated by the BELL pull bar should have 0.020- to 0.040-inch clearance between the bell hammer lip and the bell hammer post. To check, select the BELL pull bar and hold the BELL type bar against the platen. To adjust, position the bell hammer eccentric screw, keeping the high part of the eccentric toward the rear. Hold the eccentric screw and tighten the lock nut.

(90) SIGNAL BELL.—The signal bell should be positioned to obtain the most satisfactory tone and to

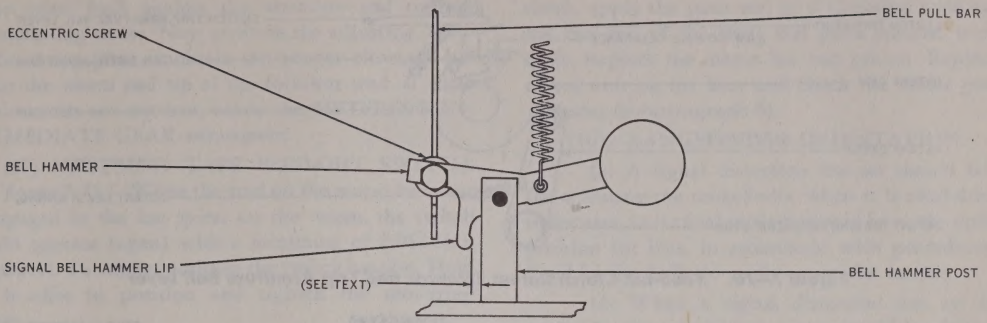

Figure 7—68. Bell Hammer

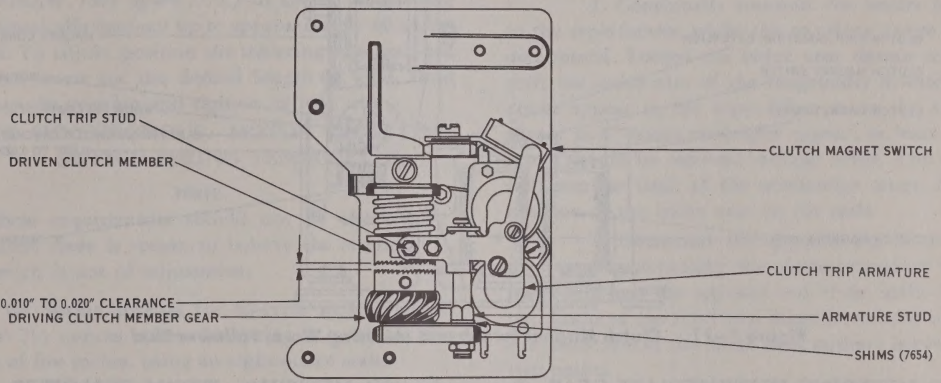

Figure 7—69. Tape Feed-out Clutch

provide at least 0.010-inch clearance between the bell and all brackets and screws, and a minimum of 0.004 inch between the bell and tape chute or platform. To adjust, position the signal bell. Hold the bell in position and tighten its mounting screw.

Note

The following adjustments (subparagraphs (91) through (98)) apply to the Automatic Tape Feed-out Mechanism of the Receiver Group Typing Reperforator.

(91) TAPE FEED-OUT CLUTCH TEETH. *(See figure 7-69.)*—There should be a clearance of 0.010 to 0.020 inch between the teeth of the two clutch members. To check, disengage the driven clutch, against the clutch trip stud, and take up the end play in the driving clutch member in a direction to make the clearance between the clutch teeth a minimum. To adjust, add or remove No. 7654 shims between the armature stud and casting.

(92) FEED-OUT CLUTCH DETENT ECCENTRIC. *(See figure 7-70.)*—The concave portion on the detent cam should be engaged by the detent roller when the clutch trip lever fully disengages the driven clutch. To check, rotate the feed-out shaft until the driven clutch is disengaged and check the position of the detent roller. The roller should just drop from the high point of the cam. To adjust, position the detent lever bearing eccentric stud. Hold the stud in position and tighten the lock nuts.

(93) CLUTCH TRIP ARMATURE BAIL LEVER. *(See figure 7-70.)*—There should be 0.008- to 0.012-inch clearance between the clutch trip stud and the top of the highest part of the clutch disengaging cam on the driven clutch member. To check, pull the armature down to the magnet cores and check the clearance. To adjust, remove the magnet coils and add or remove shims between the bottom of the coils and mounting plate. Replace the coils and recheck adjustment.

(94) CLUTCH MAGNET SWITCH. *(See figure 7-71.)*—The clutch magnet switch should be positioned to operate (close contacts) with a minimum overtravel of 0.015 inch when the armature is pulled against the magnet cores. When the clutch is disengaged and the magnets de-energized, the switch should be open. To adjust, position the switch mounting bracket.

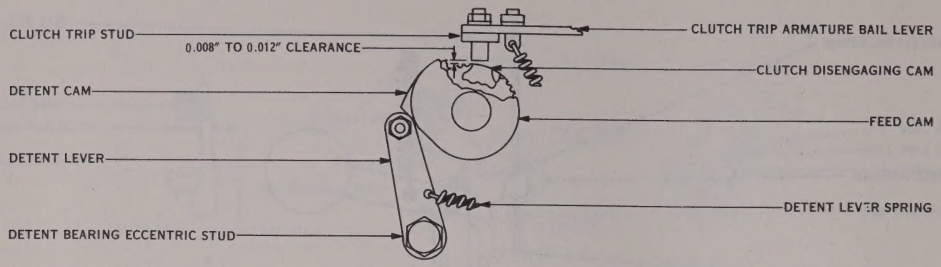

Figure 7—70. Feed-out Clutch Detent Eccentric and Trip Armature Bail Lever

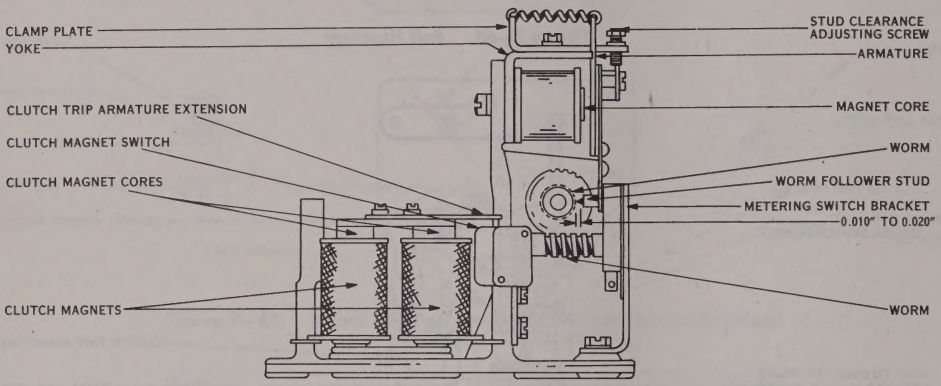

Figure 7—71. Clutch Magnet Switch and Metering Worm Follower Stud

(95) METERING INTERMEDIATE GEAR. *(See figure 7-72.)*—There should be some backlash, not more than 0.004 inch, between the metering intermediate gear and worm. Check throughout one complete revolution of the gear. To adjust, loosen the stud bearing nut and position the stud bearing. Tighten the nut and recheck the backlash.

(96) METERING WORM FOLLOWER STUD. *(See figure 7-71.)*—When the magnet is de-energized, there should be a gap of 0.010 to 0.020 inch between the outside diameter of the tip on the follower stud, along the entire length of the worm. To adjust, loosen the mounting screw in the clamp plate and hold the armature flat against the yoke and magnet core. Slide the

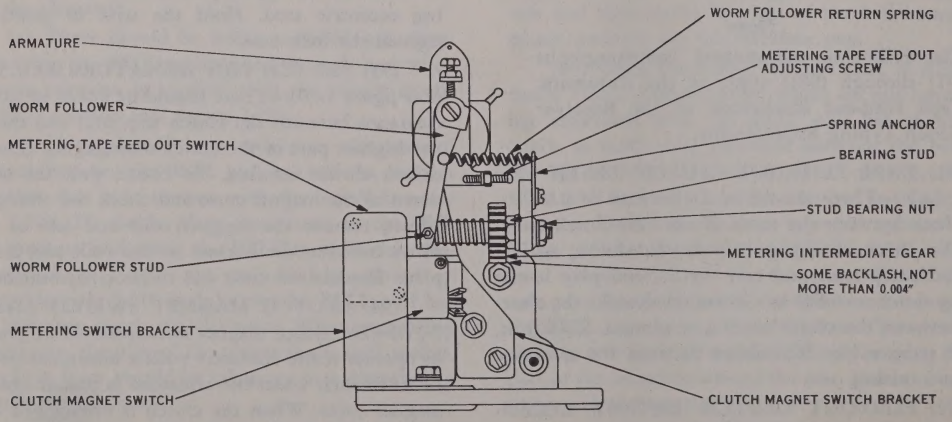

Figure 7—72. Metering Intermediate Gear

clamp plate back against the armature and tighten the mounting screw. Now position the adjusting screw in the clamp plate to obtain the proper clearance between the worm and tip of the follower stud. If these requirements are not met, refine the METERING INTERMEDIATE GEAR adjustment.

(97) METERING TAPE FEED-OUT SWITCH. *(See figure 7-72.)*—When the stud on the worm follower is engaged in the last spiral on the worm, the switch should operate (open) with a minimum of 0.015-inch overtravel. To adjust, position the switch bracket. Hold the bracket in position and tighten the mounting screws.

(98) METERING TAPE FEED-OUT ADJUSTING SCREW. *(See figure 7-72.)*—It should be possible to automatically feed-out up to approximately 40 inches of tape. To adjust, position the metering tape feed-out adjusting screw for the desired length of tape. Hold the screw in position and tighten its lock nut.

(99) SYNCHRONOUS MOTOR STARTING SWITCH SPRING TENSION.

Note

These requirements should not be checked unless there is reason to believe the starting switch is out of adjustment.

(*a*) Spring tension for 60-cycle motors should be 2 to 2½ ounces, when the spring is extended to a length of five inches, using an eight-ounce scale.

(*b*) The brush holders should be mounted by means of the center set of mounting holes and should be free.

(*c*) The brush holder stop pins should be safely within the holes of the fiber disk when all the play in the brush holders has been taken up to make the engagement of the pins with the disk a minimum.

(*d*) To check, remove the motor unit from the base and remove the motor fan and pinion.

(*e*) Remove the switch end shield screws and the switch commutator mounting screws, also the switch end shield.

(*f*) Pull out the rotor until the brush holder spring is accessible and remove the spring.

(*g*) To reassemble, replace the brush holder spring, making certain that the spring eyes are fully engaged with each other.

(*h*) Replace the switch commutator screws and tighten the two screws alternately, a little at a time, until both screws are tight.

(*i*) Replace the switch end shield screws, using the same precaution in tightening as above.

(100) SYNCHRONOUS MOTOR END THRUST SPRING TENSION.—It should require at least 7 pounds pressure to start the motor shaft moving. To check, apply the push end of a 12-pound scale against the fan end of the shaft and push parallel with the shaft. Replace the motor fan and pinion. Replace the motor unit on the base and check the motor gear adjustment (subparagraph 6).

(101) RANGEFINDER ORIENTATION.

(*a*) A signal distortion test set should be used for orienting the rangefinder when it is available. The index arm, in its final setting, should be at the optimum position for bias, in accordance with procedures outlined in the bulletin applying to the test set.

(*b*) When a signal distortion test set is not available, the orientation range should be determined as follows:

1. Continually transmit the letters R and Y to the reperforator while the receiving range is being determined. Loosen the index arm thumb screw and shift the index arm of the rangefinder toward 0 until errors appear in the copy. Then move the arm back slowly until errors no longer appear; at least 72 characters should be received without error. This position indicates one limit of the orientation range. Note the position of the index arm on the scale.

2. Determine the opposite end of the receiving range by repeating the above procedure with the index arm near the opposite end of the scale. After the two limits of the receiving range have been found, set the index arm of the range scale midway between these two points.

b. DISTRIBUTOR-TRANSMITTERS.

(1) TRANSMITTING CAM SLEEVE END PLAY. *(See figure 7-73.)*—The transmitting cam sleeve should have a maximum end play of 0.002 inch. Adjust the end play by adding or removing shims between the sleeve and side frame bearing.

(2) CLUTCH MAGNET BRACKET. *(See figure 7-74.)*—With the armature spring unhooked and the clutch magnets energized with a direct current of 0.025 amperes, the armature should make contact with both pole pieces and there should be some clearance, but not more than 0.006 inch, between the high part of the armature bail and the lower extension of the clutch trip lever (measure at the closest point). To adjust, position the magnet bracket with its mounting screws loosened slightly.

(3) CLUTCH TRIP LEVER AND LATCH LEVER. *(See figure 7-75.)*—When the clutch is disengaged by the clutch trip mechanism, the clutch trip lever should fully engage the clutch shoe lever, and the clutch latch lever should engage the full width of the notch in the clutch disk. To adjust, loosen the trip mechanism bracket mounting screws, disengage the clutch latch lever, and position the trip mechanism bracket.

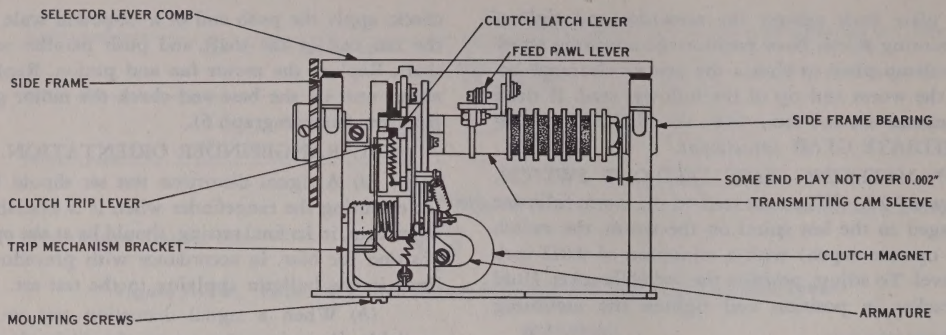

Figure 7—73. Transmitting Cam Sleeve End Play

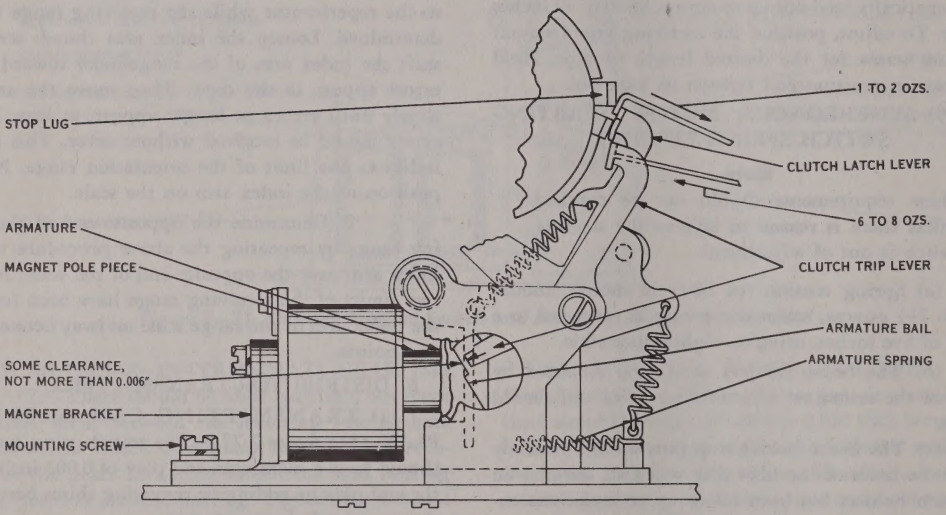

Figure 7—74. Clutch Magnet Bracket, and Trip and Latch Lever Spring Tensions

(4) CLUTCH TRIP RESET LEVER. *(See figure 7-76.)*—When the clutch magnet is de-energized and the reset roller is on the high parts of its cam, there should be 0.012 to 0.020 inch between the latching surface of the clutch magnet armature bail and the lower extension of the clutch trip lever. To adjust, loosen the reset lever clamp screw and position the clutch trip lever.

(5) CLUTCH MAGNET ARMATURE SPRING TENSION. *(See figure 7-76.)*—With the clutch magnets de-energized and the reset roller on the high part of its cam, place the push end of an eight-ounce scale against the clutch magnet armature bail just above the armature spring, and push parallel to the spring. It should require 4¼ to 5½ ounces to start the armature bail moving away from the clutch trip lever extension.

Note

It will be necessary to supply 0.100 ampere dc for satisfactory operation of the clutch magnet.

(6) CLUTCH TRIP LEVER SPRING TENSION. *(See figure 7-74.)*—With the clutch latched in the stop position, operate the clutch magnet armature bail to unlatch the clutch trip lever. Hold the armature against the pole pieces. Place the push end of an eight-ounce scale against the stop lug of the clutch trip lever and push at right angles to the lever. It should require five to eight ounces to start the lever moving toward the clutch.

(7) CLUTCH LATCH LEVER SPRING TENSION. *(See figure 7-74.)*—With the clutch latch lever resting on the center of the stop lug on the clutch disk,

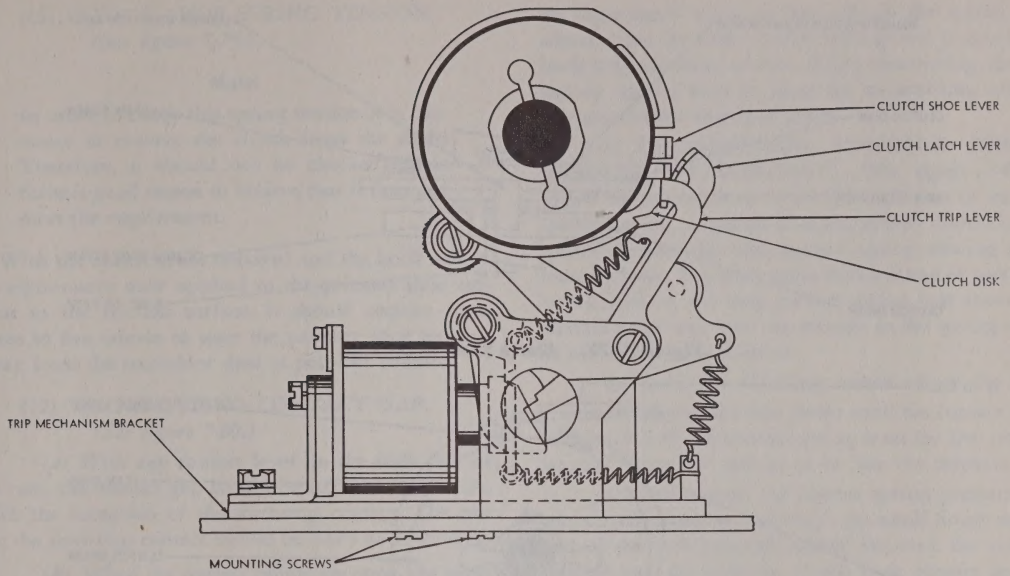

Figure 7–75. Clutch Trip and Latch Levers

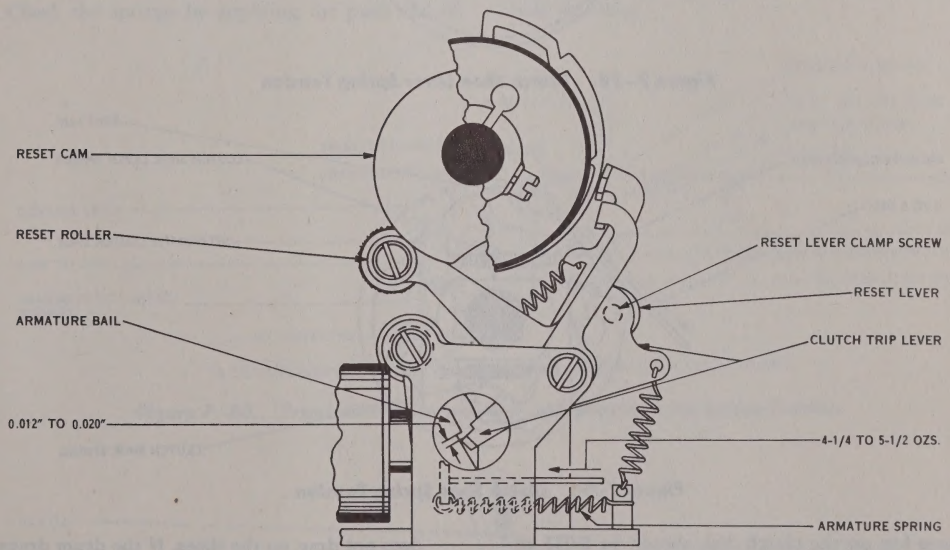

Figure 7–76. Clutch Trip Reset Lever and Magnet Armature Spring Tension

place the hook end of an eight-ounce scale over the top of the latch lever and pull at right angles to the lever. It should require one to two ounces to start the latch lever moving from the stop lug.

(8) TRIP LEVER SHAFT COMPRESSION SPRING.—This spring must hold the latch lever firmly against the bushing in the trip lever without binding the latch lever enough to affect the requirements of the clutch latch lever spring tension checked in subparagraph (7).

(9) CLUTCH SHOE MECHANISM. *(See figure 7-77.)*—The gap between the clutch shoe release lever

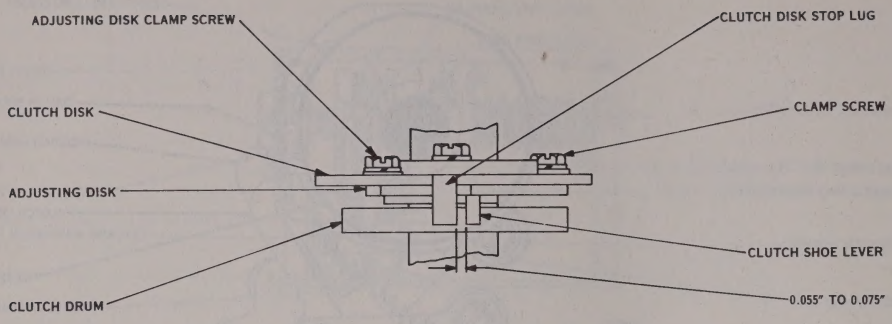

Figure 7—77. Clutch Shoe Mechanism

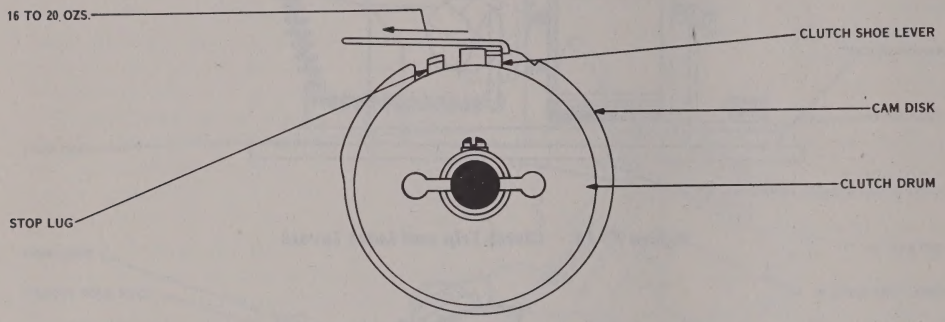

Figure 7—78. Clutch Shoe Lever Spring Tension

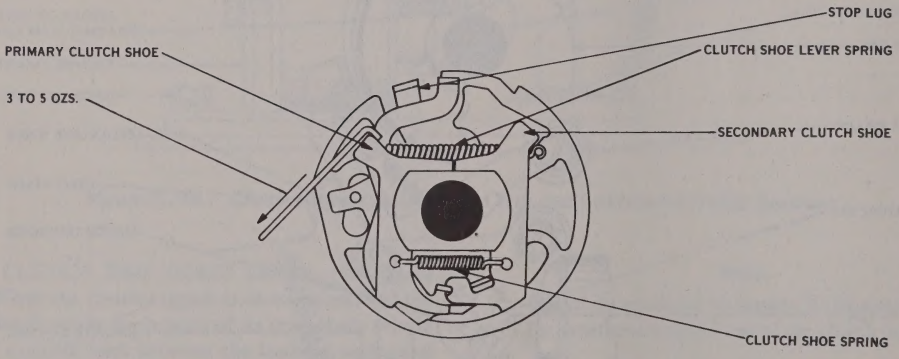

Figure 7-79. Clutch Shoe Spring Tension

and its stop lug on the clutch disk should be 0.055 to 0.075 inch greater when the clutch is engaged than when the clutch is disengaged. To adjust, loosen the two clamp screws in the clutch disk, engage a wrench on the lug of the adjusting disk and rotate the disk.

Note

After the above adjustment is made, disengage the clutch and rotate the drum in its normal direction of rotation to make certain that it does not drag on the shoes. If the drum drags, refine the above adjustment.

(10) CLUTCH SHOE LEVER SPRING TENSION. *(See figure 7-78.)*—With the clutch engaged and the cam disk held to prevent its turning, place the hook end of a horizontally held 32-ounce scale against the side of the clutch shoe release lever which is opposite the stop lug on the clutch disk. With the scale pulled tangent to the clutch, it should require 16 to 20 ounces to move the shoe lever in contact with the stop lug.

(11) CLUTCH SHOE SPRING TENSION. *(See figure 7-79.)*

Note

In order to check this spring tension it is necessary to remove the clutch from the shaft. Therefore, it should not be checked unless there is good reason to believe that it does not meet the requirement.

With the clutch drum removed and the hook end of an eight-ounce scale applied to the primary shoe tangent to the friction surface, it should require from three to five ounces to start the primary shoe moving away from the secondary shoe at point of contact.

(12) TRANSMITTING CONTACT GAP. *(See figure 7-80.)*

(*a*) With any contact lever on the high part of its cam, the contact gap should be 0.020 to 0.025 inch, with the exception of the start-stop contact. The gap for the start-stop contact should be 0.015 to 0.025 inch.

(*b*) When the contact points are open, the short contact springs should rest against their back stops with a pressure of from four to eight ounces (see figure 7-81). Check the springs by applying the push end of an eight-ounce scale to the end of the spring. To adjust, bend the short contact springs and position the back-stop adjusting screws. When positioning the adjusting screws, keep in mind the transmitting contact gap adjustment described above.

(13) TRANSMITTING CONTACT SPRING PRESSURE (PRELIMINARY). *(See figure 7-82.)*— When the contact lever is on the high part of its cam (points open), a tension of seven ounces should be required to start the long contact spring moving away from its lever. To check, place the push end of an eight-ounce scale on the long contact spring just above the contact point and note the tension as the spring starts to move. Adjust as follows:

(*a*) Back the adjusting screws off all the way.

(*b*) Rotate the cam sleeve until the contact lever associated with the contact spring is on the low part of its cam. Turn the unit so as to face the contacts.

(*c*) To increase the contact spring pressure, insert a 72003 bending tool (with the small finger on the end of the tool pointing down) between the contact bracket and the stiffener of the long contact spring. Position the finger on the bending tool behind the spring to be bent and turn the bending tool in a clockwise direction.

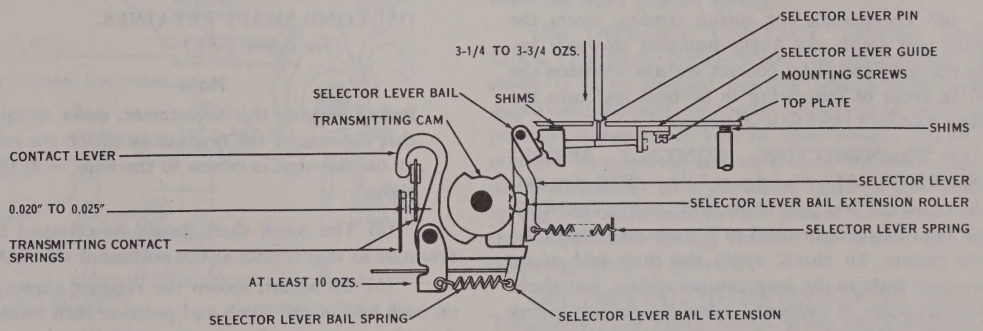

Figure 7—80. Transmitting Contact Gap and Selector Lever Spring Tension

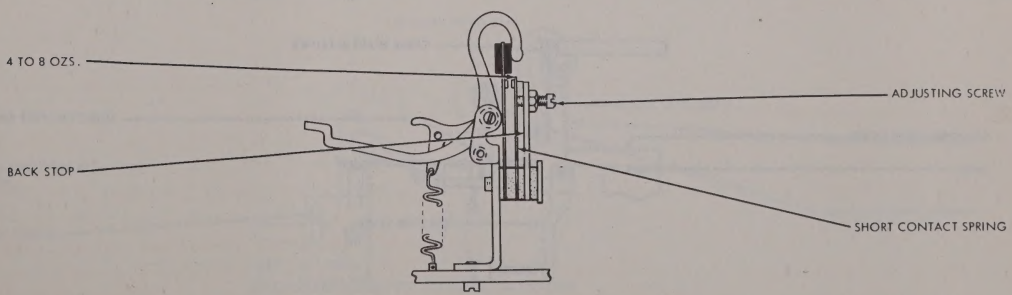

Figure 7—81. Transmitting Contact Spring - Short

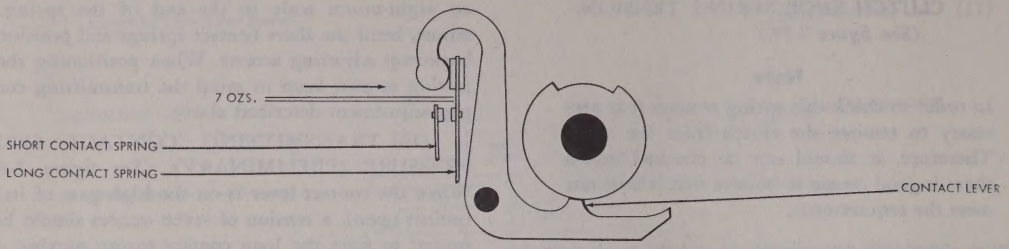

Figure 7—82. Transmitting Contact Spring - Long (Preliminary)

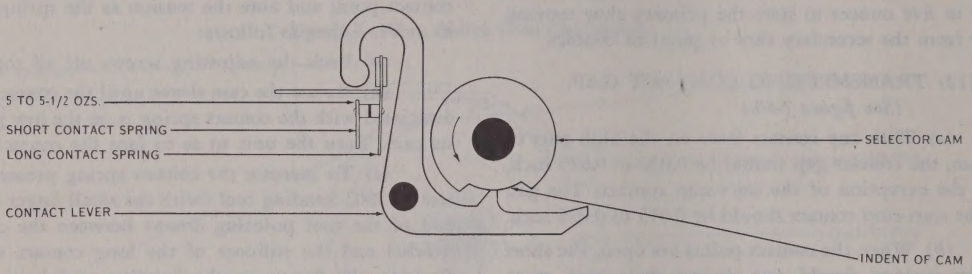

Figure 7—83. Transmitting Contact Spring - Long (Final)

(*d*) To decrease the spring tension, insert the bending tool (with the finger pointing upward) between the long and short contact springs. Position the finger in front of the spring to be bent and turn the bending tool in a clockwise direction.

(14) TRANSMITTING CONTACT SPRING PRESSURE (FINAL). *(See figure 7-83.)*—With any contact lever on the low part of its cam (points closed), it should require a pressure of 5 to 5½ ounces to open the contact points. To check, apply the push end of an eight-ounce scale to the long contact spring, just above the contact point. If necessary, refine the contact spring pressure by rebending the long contact spring as described previously. Recheck the transmitting contact gap adjustment (paragraph (12) above).

(15) COMB SHAFT RETAINER. *(See figure 7-84.)*

Note

Before making this adjustment, make certain that the side of the retainer in which the end of the slot that is closest to the hole, is at the right.

(*a*) The comb shaft should be clamped by the retainers so that it rests at the bottom of the shaft slot.

(*b*) To adjust, loosen the retainer clamp screw on each end of the comb and position each retainer so that the eccentric slot in the retainer takes up the clearance between the shaft and the bottom of the shaft slot. Tighten the clamp screws.

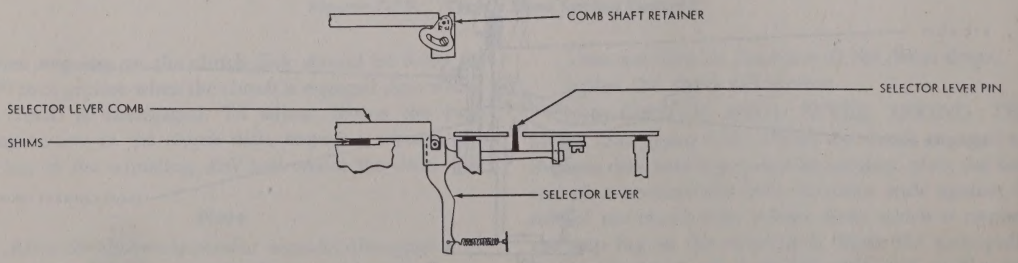

Figure 7—84. Comb Shaft Retainer

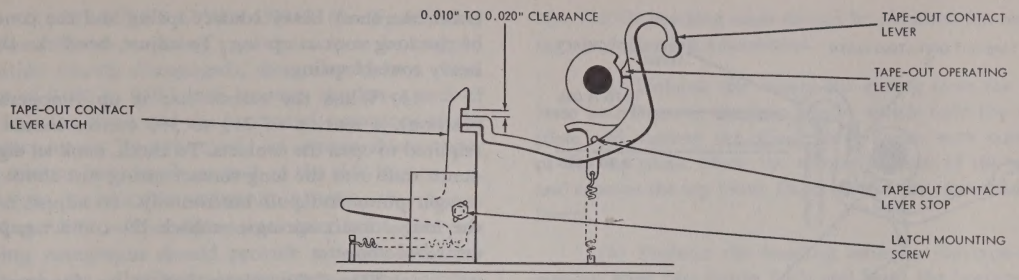

Figure 7—85. Tape-out Contact Lever Latch

(16) TAPE-OUT CONTACT LEVER LATCH. *(See figure 7-85.)*—When the tape-out operating lever is in the center of the low part of its cam and the tape-out contact lever is against its stop, the clearance between the top of the contact lever and the contact lever latch should be 0.010 to 0.020 inch. To adjust, loosen the nut on the mounting screw and move the latch up or down. Tighten the nut.

(17) TAPE-OUT CONTACT LEVER LATCH SPRING TENSION. *(See figure 7-86.)*—When the tape-out operating lever is resting on the low part of its cam, hook an eight-ounce scale over the contact lever

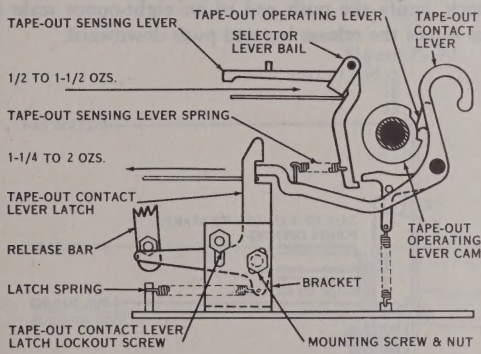

Figure 7—86. Tape-out Contact Lever Latch and Sensing Lever Spring Tensions

latch at the bottom of the notch. It should require a tension of 1¼ to 2 ounces to start the latch moving.

(18) TAPE-OUT CONTACT GAP. *(See figure 7-87.)*

Note

Before making this adjustment on a numbering distributor-transmitter, move the contact lever latch lock-out screw to the top of its slot.

When the transmitting cam sleeve is in its stop position (clutch teeth disengaged) and the tape-out contact lever is in its latched position, the tape-out contact gap should be between 0.020 and 0.025 inch. To adjust, bend the short contact spring.

(19) TAPE-OUT CONTACT SPRING PRESSURE. *(See figure 7-88.)*—When the transmitting cam sleeve is in its stopped position (clutch teeth disengaged) and the tape-out contact lever is in its unlatched position, a tension of two to three ounces should be required to open the contact points. To check, apply the push end of an eight-ounce scale to the contact spring just above the contact points. To adjust, bend the long contact spring; recheck the contact gap (see subparagraph (18) above).

(20) TAPE-OUT OPERATING LEVER SPRING TENSION. *(See figure 7-88.)*—When the transmitting cam sleeve is in its stopped position (clutch disengaged) and the tape-out operating lever is resting on the high

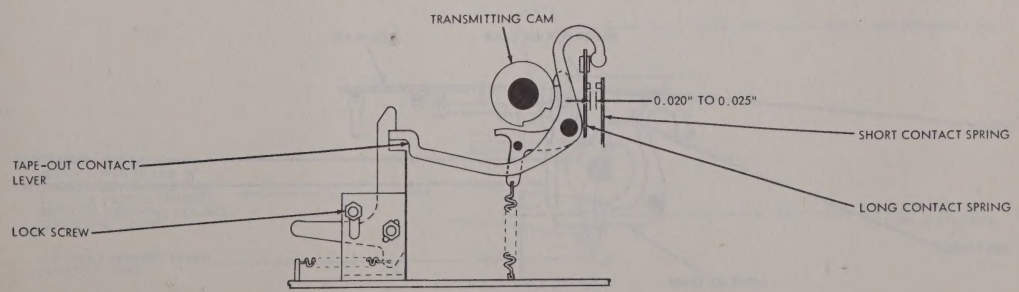

Figure 7—87. Tape-out Contact Gap

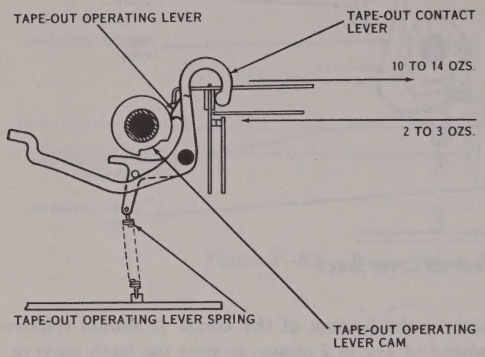

Figure 7—88. Tape-out Contact Operating Lever Spring Tension and Tape-out Contact Spring Pressure

part of its cam, it should require a tension of from 10 to 14 ounces to start the lever moving away from its cam. To check, hook a 32-ounce scale over the top of the lever and pull in a horizontal direction.

(21) RELEASE BAR CONTACT.
(See figure 7-89.)

(*a*) When the release bar is fully depressed, there should be a gap of from 0.020 to 0.025 inch between the short heavy contact spring and the contact of the long contact spring. To adjust, bend the short heavy contact spring.

(*b*) When the release bar is up (unoperated position), a tension of 2½ to 3½ ounces should be required to open the contacts. To check, hook an eight-ounce scale over the long contact spring just above the contact point and pull horizontally. To adjust, bend the long contact springs; recheck the contact gap as described above.

(*c*) When the release bar is up (unoperated position) there should be a gap of 0.010 to 0.015 inch between the contact on the short thin contact spring and the contact on the long contact spring. To adjust, bend the short thin contact spring.

(*d*) A tension of 2½ to 3½ ounces should be required to start the short thin contact spring moving away from the spring stiffener. To check, hook an eight-ounce spring scale over the short thin contact at the contact point and note the reading at which the spring moves away from the spring stiffener. To adjust, bend the short thin contact spring.

(22) RELEASE BAR SPRING TENSION. *(See figure 7-89.)*—A tension of 1½ to 3 ounces should be required to start the release bar moving downward. To check, apply the push end of an eight-ounce scale to the top of the release bar and push downward.

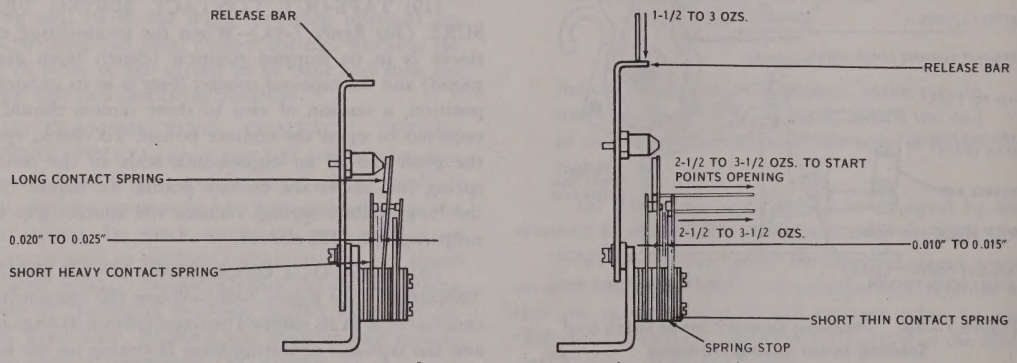

Figure 7—89. Release Bar Contact and Spring Tensions

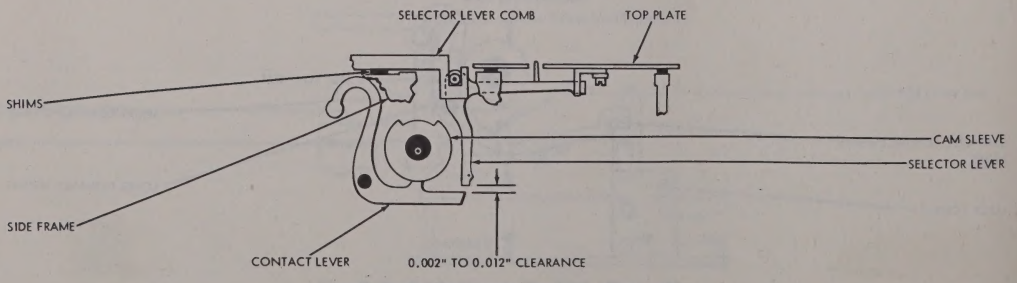

Figure 7—90. Selector Lever Comb

(23) SELECTOR LEVER COMB. *(See figure 7-90.)*—When the transmitting cam sleeve is in its stopped position (clutch disengaged), there should be a clearance of 0.002 to 0.012 inch between the lower ends of the selector levers and the horizontal extensions of the contact levers. To adjust, add or remove shims under the selector lever comb on each of the side frames.

(24) TAPE-OUT SENSING LEVER. *(See figures 7-91 and 7-92.)*—The adjustments described in the preceding paragraphs should provide satisfactory operation of the distributor-transmitters under normal conditions. However, when it becomes necessary to run badly worn or creased tapes through the unit, it is recommended that the tape-out sensing lever be adjusted to provide a wider margin of operation. Two No. 116799 bending tools should be obtained for making the following adjustment.

(*a*) Unhook the release bar spring from the release bar. Remove the four screws which hold the top plate and remove the shims from under each corner of the top plate. Move the release bar out of the way and remove the top plate. Do not bend the tape sensing levers.

(*b*) Position the bending tools on the tape-out sensing lever (see figure 7-92) and bend the horizontal leg of the tape-out sensing lever so that the top of its sensing pin is flush within 0.005 inch with the top of the adjacent selector lever pin. Be careful not to damage the sensing pin with the bending tool.

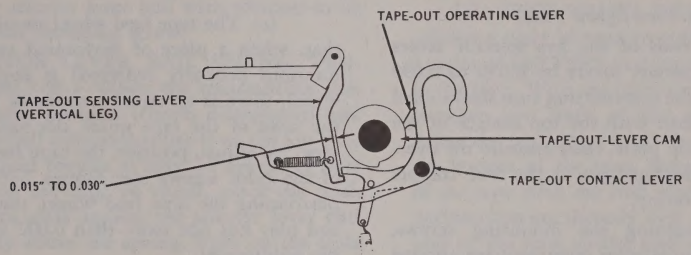

Figure 7—91. Tape-out Sensing Lever

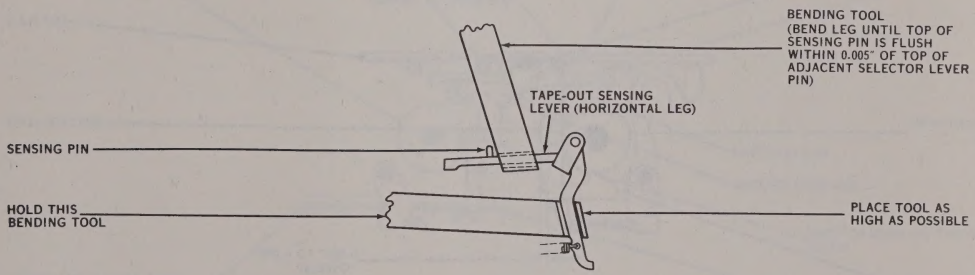
BENDING TOOL (BEND LEG UNTIL TOP OF SENSING PIN IS FLUSH WITHIN 0.005" OF TOP OF ADJACENT SELECTOR LEVER PIN)
TAPE-OUT SENSING LEVER (HORIZONTAL LEG)
SENSING PIN
HOLD THIS BENDING TOOL
PLACE TOOL AS HIGH AS POSSIBLE

Figure 7—92. Placement of Bending Tool on Tape-out Sensing Lever (Horizontal Leg)

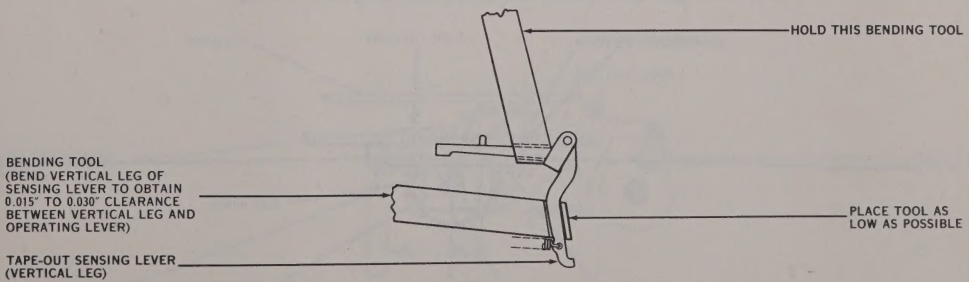
HOLD THIS BENDING TOOL
BENDING TOOL (BEND VERTICAL LEG OF SENSING LEVER TO OBTAIN 0.015" TO 0.030" CLEARANCE BETWEEN VERTICAL LEG AND OPERATING LEVER)
PLACE TOOL AS LOW AS POSSIBLE
TAPE-OUT SENSING LEVER (VERTICAL LEG)

Figure 7—93. Placement of Bending Tool on Tape-out Sensing Lever (Vertical Leg)

(*c*) When the transmitting cam sleeve is in its stopped position (clutch disengaged), position the bending tools on the lever (see figure 7-93). Bend the vertical leg of the sensing lever until a clearance of 0.015 to 0.030 inch is obtained between the vertical leg of the sensing lever and the horizontal extension of the tape-out operating lever.

(*d*) Replace the top plate and release bar spring, making sure the original number of shims are replaced under each corner of the top plate.

(*e*) The following adjustments should be checked after the top plate is replaced:

1. Tape-out Contact Lever Latch
2. Top Plate
3. Selector Lever Bail
4. Feed Pawl Lever.

(25) TOP PLATE. *(See figure 7-94.)*

(*a*) The lower ends of the five selector levers should overlap their contact levers by 0.050 to 0.090 inch. To check, rotate the transmitting cam sleeve until the selector pins are flush with the top surface of the tape guide slot in the top plate, then measure the overlap. To adjust, shim the top plate at the four corners to obtain the proper overlap.

(*b*) Before tightening the mounting screws, position the plate so the selector lever pins are aligned in the center of the slot in the top plate. There should be a minimum clearance of 0.006 inch between the selector lever pins (also tape-out pin) and the edges of the slotted holes (see figure 7-102).

(26) FEED WHEEL. *(See figure 7-95.)*

(*a*) The feed pins on the tape feed wheel should extend 0.035 to 0.045 inch above the top surface of the tape channel in the top plate. To adjust, add or remove shims between feed wheel brackets and the bottom surface of the top plate.

(*b*) The feed wheel bracket mounting screws should engage the top plate with the maximum number of threads without protruding through the top of the plate. To adjust, add or remove shims between the mounting brackets and clamp plates.

(*c*) The tape feed wheel should be positioned so that, when a piece of perforated tape (with the perforations properly centered) is engaged by the feed wheel, there is an equal amount of clearance between the sides of the tape guide slot and the edges of the tape. To adjust, position the tape feed wheel by means of the pilot screws (see figures 7-95 and 7-98). After positioning the tape feed wheel, there should be some end play but not more than 0.002 inch. Recheck feed pin adjustment.

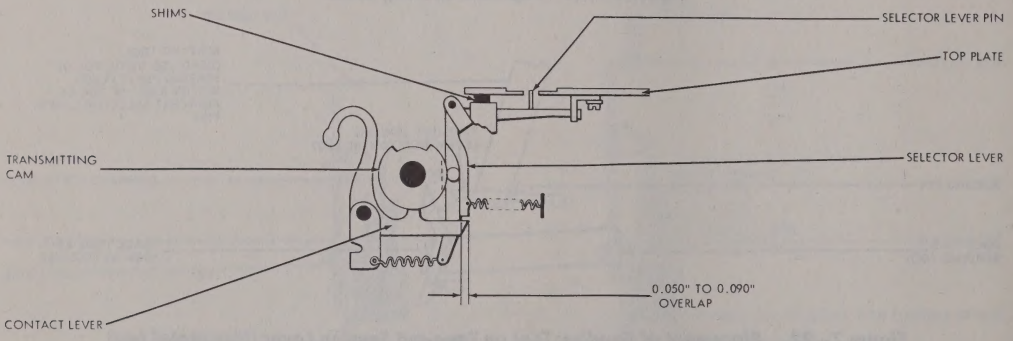

Figure 7—94. Top Plate

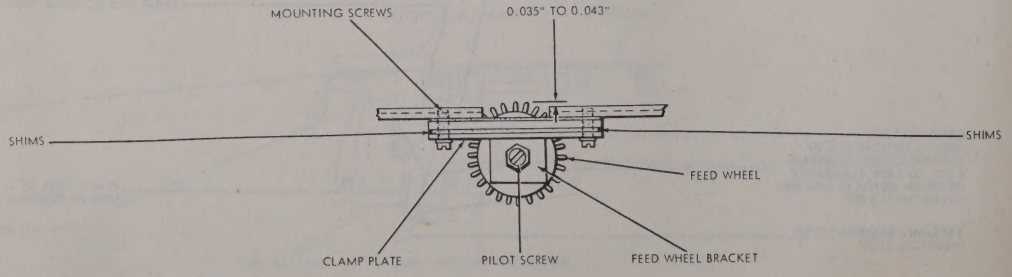

Figure 7-95. Feed Wheel

(27) SELECTOR LEVER BAIL. *(See figure 7-96.)*

(*a*) Before making the following adjustments on numbering distributor-transmitters, move the letters operating lever to the front of the transmitter by means of its mounting stud and the slotted hole in the bracket (see figure 7-106). This prevents the vertical projection of the letters operating lever from interfering with the selector levers.

(*b*) When the selector cam sleeve is in its stop position (clutch disengaged) and the selector lever bail extension roller is on the low part of the cam, the selector lever pins should not extend above the top surface of the tape channel in the top plate nor should they be below the top surface by more than 0.010 inch. To adjust, insert a screwdriver through a hole in the side frame, loosen the selector lever bail clamping screw, and position the selector lever bail with relation to its extension. Tighten clamping screw.

(28) SELECTOR LEVER BAIL SPRING TENSION. *(See figure 7-96.)*—When the transmitting cam sleeve is in its stop position (clutch disengaged) and the selector lever bail extension roller is on the low part of its cam, it should require at least 10 ounces to start the bail extension moving. To check, place the push end of a 32-ounce scale against the selector lever bail extension directly above the spring. Push on the scale in line with the spring and note the reading when the bail moves.

(29) SELECTOR LEVER SPRING TENSION. *(See figure 7-80.)*—When the selector lever pins are up as far as they will go, a tension of 3¼ to 3¾ ounces should be required to start the pins moving down. To check, place the push end of an eight-ounce scale on the pin and push downward.

(30) TAPE-OUT SENSING LEVER SPRING TENSION. *(See figure 7-86.)*—When the tape-out sensing pin is up as far as it will go, a tension of ½ to 1½ ounces should be required to start the tape-out sensing lever moving. To check, place the push end of an 8-ounce scale at the bend in the tape-out sensing lever, just below the selector lever bail, and push horizontally.

(31) FEED WHEEL DETENT. *(See figure 7-97.)*—Select a piece of tape (regular or chadless tape) with a series of LETTERS perforations checked for 10 holes to the inch. With the detent roller resting in an indent between two teeth of the tape feed ratchet wheel, rotate the cam sleeve until the tape pins are flush with the bottom of the tape. Engage the feed perforations of the tape with the feed wheel so that the LETTERS perforations are directly over the tape pins. When the play of the tape on the feed wheel is taken up in the

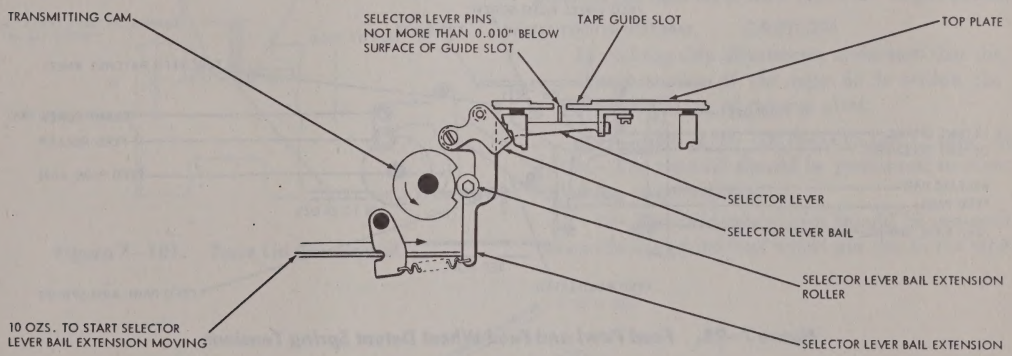
TRANSMITTING CAM
SELECTOR LEVER PINS NOT MORE THAN 0.010" BELOW SURFACE OF GUIDE SLOT
TAPE GUIDE SLOT
TOP PLATE
SELECTOR LEVER
SELECTOR LEVER BAIL
SELECTOR LEVER BAIL EXTENSION ROLLER
10 OZS. TO START SELECTOR LEVER BAIL EXTENSION MOVING
SELECTOR LEVER BAIL EXTENSION

Figure 7—96. Selector Lever Bail and Bail Spring Tension

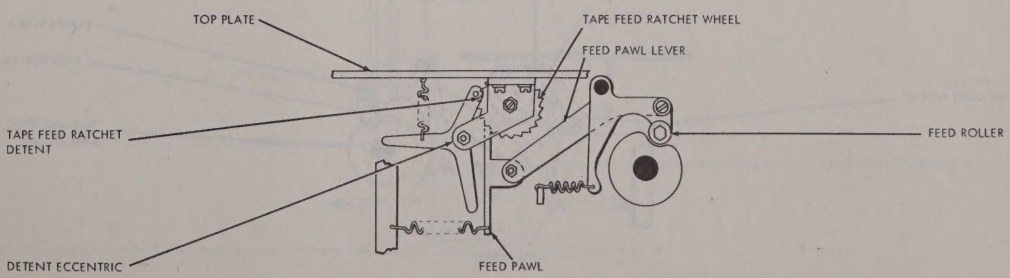

Figure 7—97. Feed Wheel Detent

direction of rotation of the feed wheel, the tape sensing pin, with the minimum clearance in its code hole, should just clear the trailing edge of its code hole. To adjust, hold the feed pawl away from the ratchet and position the detent eccentric. Keep the high part of eccentric toward the rear of the unit.

(32) SELECTOR LEVER GUIDE. *(See figure 7-80.)*—When a piece of tape, perforated with the LETTERS combination and properly centered (having No. 1 and No. 5 code holes equidistant from the edges), is placed in the transmitter and the cam sleeve rotated until the selector lever pins are in their uppermost position, the pins should be approximately in line with the center line through each hole in the perforated tape. To adjust, loosen the mounting screws of the selector lever guide and position the guide. Tighten the mounting screws.

(33) TAPE FEED RATCHET WHEEL DETENT SPRING TENSION. *(See figure 7-98.)*—When the tape feed ratchet detent roller is resting between two teeth on the tape feed ratchet wheel, it should require a tension of 14 to 20 ounces to start the detent moving. To check, hook a 32-ounce scale over the roller on the detent and pull parallel with the top plate.

(34) FEED PAWL LEVER. *(See figure 7-99.)*—When the transmitting cam sleeve is in its stop position (clutch disengaged), there should be some clearance, not more than 0.010 inch, between the end of the feed pawl and the face of the ratchet wheel tooth which has the least amount of clearance. Check the clearance through one complete revolution of the ratchet wheel. To adjust, loosen the clamp screw and position the feed pawl lever with respect to the feed pawl arm. Tighten the clamp screw.

(35) FEED PAWL ARM SPRING TENSION. *(See figure 7-98.)*—When the transmitting cam sleeve is in its stop position (clutch disengaged) and the feed roller is resting on the low part of its cam, it should require a tension of 24 to 28 ounces to start the feed pawl arm moving. To check, with the feed pawl spring unhooked from the feed pawl, place a 32-ounce scale over the feed pawl arm in line with the spring hole and pull at right angles to the feed pawl arm. Rehook the feed pawl spring.

(36) FEED PAWL SPRING TENSION. *(See figure 7-98.)*—When the distributor-transmitter operates at 60 or 75 wpm, a 60-turn spring is used. When the distributor-transmitter operates at 100 wpm, a 40-turn spring is used. When the transmitting cam sleeve is in its stopped position (clutch disengaged), a tension of ½ to 2 ounces for 60 or 75 wpm or 3½ to 4½ ounces for 100 wpm is required to start the feed pawl moving

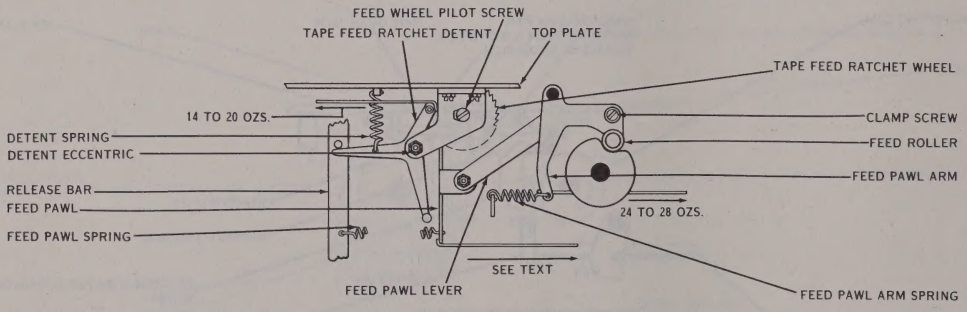

Figure 7—98. Feed Pawl and Feed Wheel Detent Spring Tensions

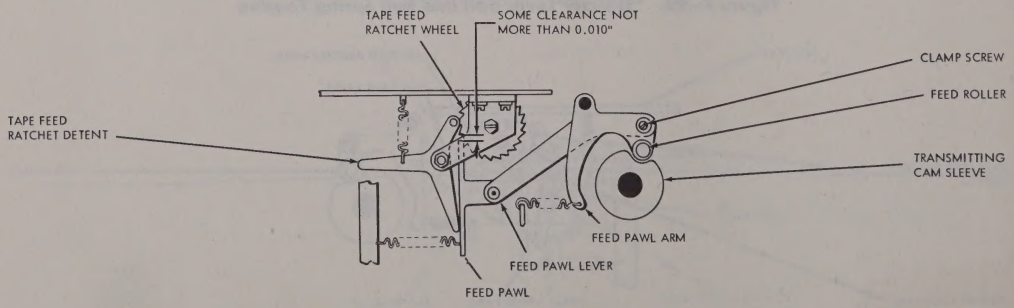

Figure 7—99. Feed Pawl Lever

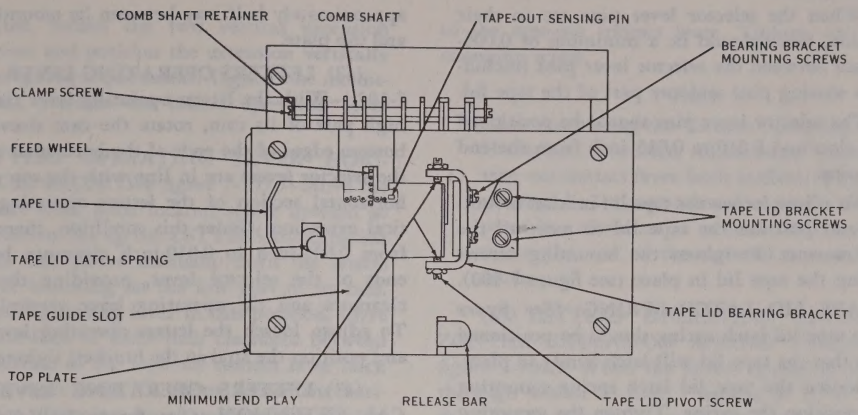

Figure 7—100. Tape Lid (Vertical)

away from the ratchet wheel. To check, hook an eight-ounce scale over the lower part of the feed pawl near the spring hole and pull at right angles to the feed pawl.

(37) TAPE LID PIVOT SCREW. *(See figure 7-100.)*—The tape lid should be centered in the tape lid bearing bracket and should be free to pivot without binding. There should be a minimum amount of end play between the tape lid and pivot screws. To adjust, position the lid by means of the two pivot screws and tighten the lock nuts.

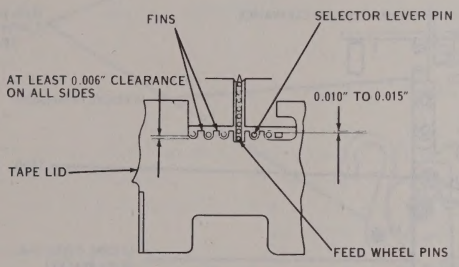

Figure 7—101. Tape Lid (Horizontal)

(38) TAPE LID (VERTICAL). *(See figure 7-100.)*—The tape lid should rest flatly along both edges of the tape guide slot in the top plate. To adjust, loosen the two tape lid bearing bracket mounting screws and position the tape lid to meet the above requirements.

CAUTION

In making this adjustment, make sure that the lowest section of the tape lid is within the tape guide slot of the top plate.

(39) TAPE LID (HORIZONTAL). *(See figure 7-101.)*—The tape lid should be positioned to meet the following requirements:

(*a*) The feed wheel pins should be centered between the fins of the feed wheel pin slot in the tape lid.

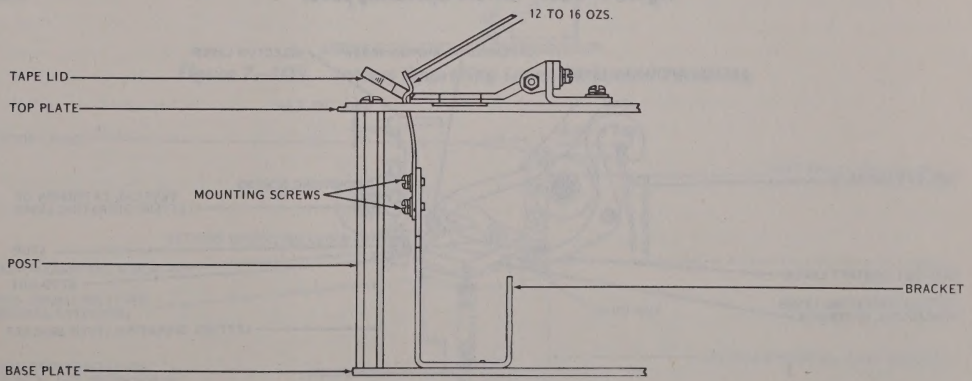

Figure 7—102. Tape Lid Latch Spring

(*b*) When the selector lever pins are in their upper position, there should be a minimum of 0.006-inch clearance between the selector lever pins (including tape-out sensing pin) and any part of the tape lid.

(*c*) The selector lever pins should be positioned inside their slots and 0.010 to 0.015 inch from the end of the tape pins.

(*d*) To adjust, loosen the tape lid bracket mounting screws and position the tape lid to meet all the above requirements. Retighten the mounting screws while holding the tape lid in place (see figure 7-100).

(40) TAPE LID LATCH SPRING. *(See figure 7-102.)*—The tape lid latch spring should be positioned vertically so that the tape lid will latch firmly in place. To adjust, loosen the tape lid latch spring mounting screws and position the spring. Tighten the mounting screws.

(41) TAPE LID LATCH SPRING TENSION. *(See figure 7-102.)*—When the tape lid is latched, it should require a tension of 12 to 16 ounces to start the latch spring deflecting. To check, place the push end of a 32-ounce scale on the uppermost bent portion of the spring and push downward. To adjust, bend the spring approximately half way between its mounting bracket and top plate.

(42) LETTERS OPERATING LEVER. *(See figure 7-103.)*—With the letters operating lever riding on the high part of its cam, rotate the cam sleeve until the bottom edges of the ends of the horizontal members of the selector levers are in line with the top edge of the horizontal section of the letters operating lever vertical extension. Under this condition, there should be from 0.005-inch to 0.010-inch clearance between the ends of the selector lever, providing the minimum clearance and the operating lever vertical extension. To adjust, loosen the letters operating lever stud nut and position the stud in the bracket; tighten the nut.

(43) LETTERS OPERATING LEVER VERTICAL EXTENSION. *(See figure 7-104.)*—Rotate the transmitting cam sleeve until all selector lever pins are in their selected (uppermost) position and the letters operating lever horizontal extension is on the low part of its cam. Under this condition there should be 0.020-inch to 0.040-inch clearance between the underside of the horizontal member of the selector levers and the top surface of the letters operating lever vertical exten-

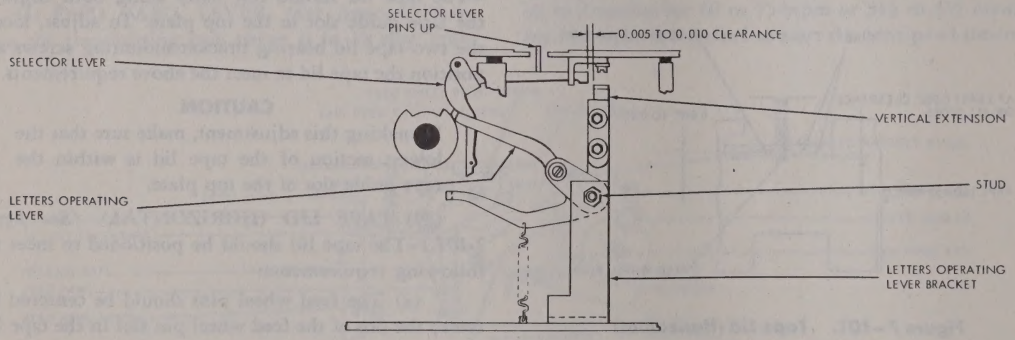

Figure 7—103. Letters Operating Lever

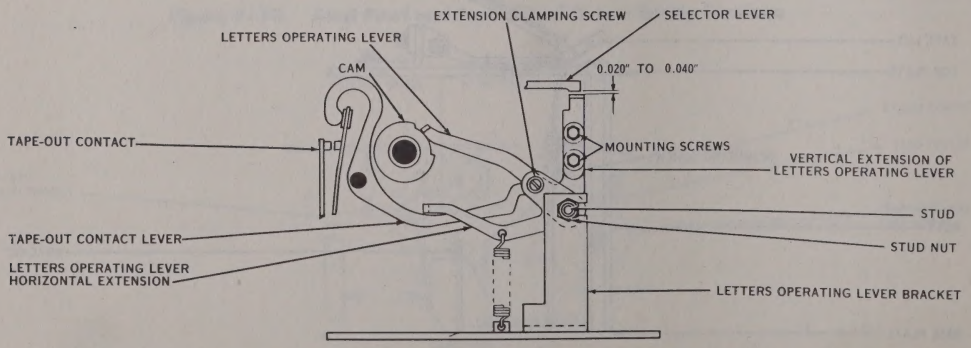

Figure 7—104. Letters Operating Lever Vertical Extension

sion. To adjust, loosen the two vertical extension mounting screws and position the extension vertically to meet the foregoing requirement. Tighten the mounting screws and recheck the letters operating lever adjustment.

(44) LETTERS OPERATING LEVER HORIZONTAL EXTENSION. *(See figure 7-105.)*—Move the tape-out contact lever latch lockout screw upward so that it is ineffective. Set up the LETTERS combination and rotate the cam sleeve manually until the letters operating lever is resting on the low part of its cam. With the letters operating lever in this position, there should be 0.010-inch to 0.020-inch clearance between the latching surface of the tape-out contact lever latch and tape-out contact lever. To adjust, loosen the horizontal extension clamping screw and position the letters operating lever horizontal extension with respect to the tape-out contact lever. Tighten the extension clamping screw.

Note

After completing the "Letters Operating Lever Horizontal Extension Adjustment," make the tape-out contact lever latch ineffective by positioning the lockout screw downward so as to provide a clearance of at least 0.010-inch between the end of the tape-out contact lever latch.

(45) LETTERS OPERATING LEVER HORIZONTAL EXTENSION SPRING TENSION. *(See figure 7-106.)*—When the letters operating lever is on the high side of its cam, a tension of 10 to 14 ounces should be required to start the lever moving. To check, hook a 32-ounce scale over the vertical extension of

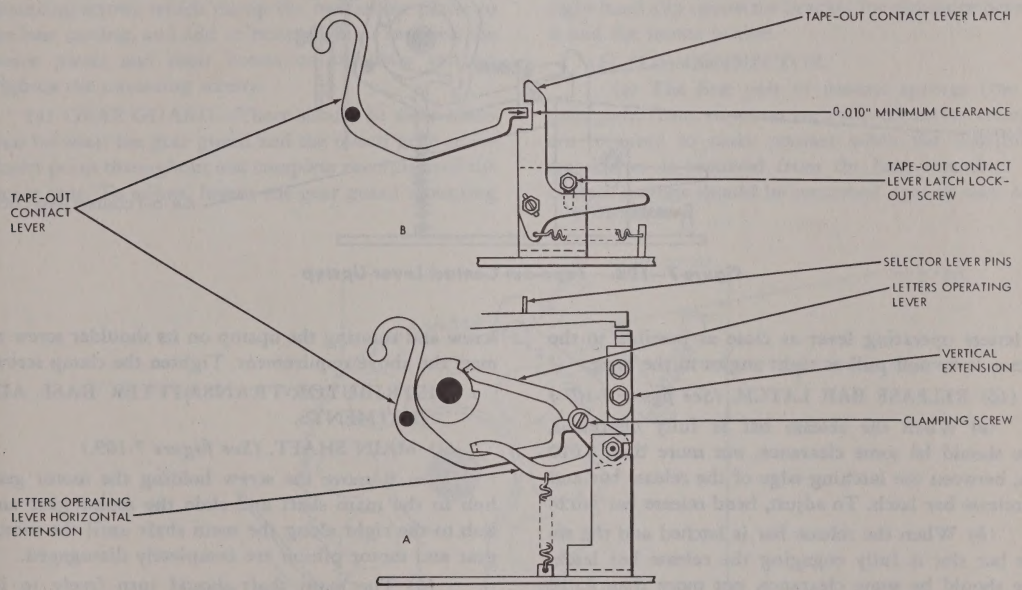

Figure 7—105. Letters Operating Lever Horizontal Extension

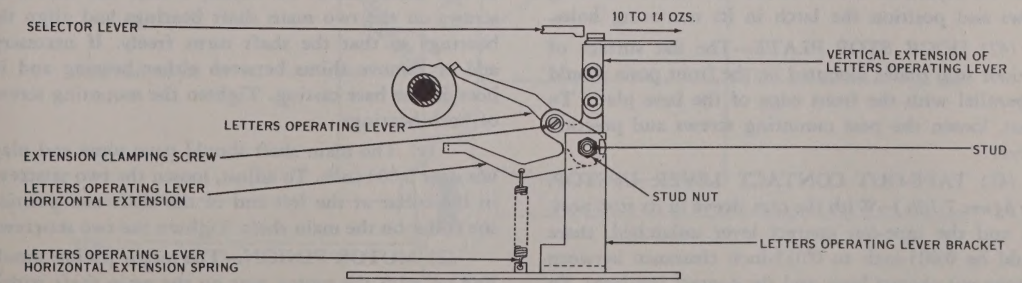

Figure 7—106. Letters Operating Lever Horizontal Extension Spring Tension

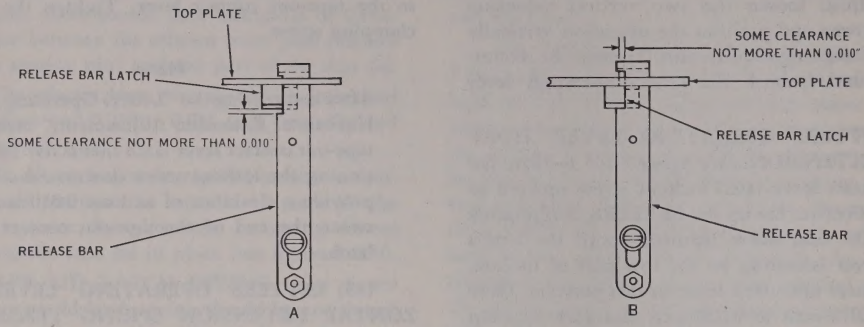

Figure 7—107. Release Bar Latch

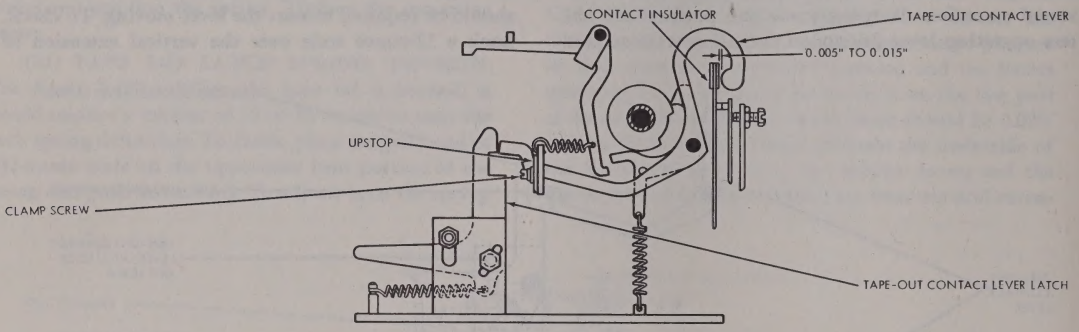

Figure 7—108. Tape-out Contact Lever Upstop

the letters operating lever as close as possible to the selector lever and pull at right angles to the lever.

(46) RELEASE BAR LATCH. *(See figure 7-107.)*

(*a*) When the release bar is fully depressed, there should be some clearance, not more than 0.010 inch, between the latching edge of the release bar and the release bar latch. To adjust, bend release bar latch.

(*b*) When the release bar is latched and the release bar slot is fully engaging the release bar latch, there should be some clearance, not more than 0.010 inch, between the slot in the release bar and the top plate. To adjust, loosen the release bar latch mounting screws and position the latch in its mounting holes.

(47) DOOR STOP PLATE.—The flat surface of the door stop plates mounted on the front posts should be parallel with the front edge of the base plate. To adjust, loosen the post mounting screws and position by eye.

(48) TAPE-OUT CONTACT LEVER UPSTOP. *(See figure 7-108.)*—With the cam sleeve in its stop position and the tape-out contact lever unlatched, there should be 0.005-inch to 0.015-inch clearance between the tape-out contact lever and the contact insulator. To adjust, position the upstop by loosening the clamp screw and rotating the upstop on its shoulder screw to meet the above requirement. Tighten the clamp screw.

i. DISTRIBUTOR-TRANSMITTER BASE ADJUSTMENTS.

(1) MAIN SHAFT. *(See figure 7-109.)*

(*a*) Remove the screw holding the motor gear hub to the main shaft and slide the motor gear and hub to the right along the main shaft until the motor gear and motor pinion are completely disengaged.

(*b*) The main shaft should turn freely in its bearings. Check throughout one complete revolution of the main shaft. To adjust, loosen the mounting screws on the two main shaft bearings and align the bearings so that the shaft turns freely. If necessary, add or remove shims between either bearing and its boss on the base casting. Tighten the mounting screws of both bearings.

(*c*) The main shaft should have some end play, not over 0.004 inch. To adjust, loosen the two setscrews in the collar at the left end of the shaft and position the collar on the main shaft. Tighten the two setscrews.

(2) MOTOR PINION.—The motor pinion should line up with the motor gear on the main shaft within 1/32 inch. To adjust, loosen the four mounting screws

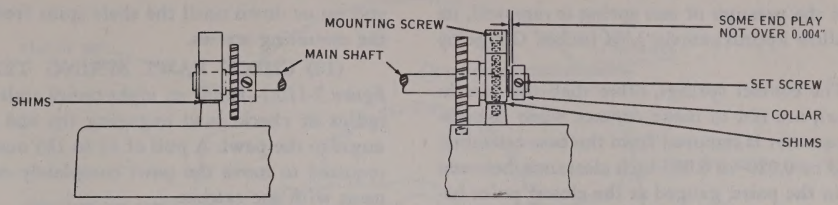

Figure 7—109. Main Shaft

and position the motor on its mounting brackets. Tighten the mounting screws.

(3) MOTOR PINION BACKLASH.—There should be a barely perceptible amount of backlash between the motor pinion and the motor gear. This backlash should be checked throughout one complete revolution of the motor gear. To adjust, loosen the four mounting screws which clamp the two motor plates to the base casting, and add or remove shims between the motor plates and their bosses on the base casting. Tighten the mounting screws.

(4) GEAR GUARD.—There should be some clearance between the gear guard and the motor gear at the closest point throughout one complete revolution of the motor gear. To adjust, loosen the gear guard mounting screws and position the gear guard. Tighten the mounting screws. The amount of clearance will depend on the size of the motor pinion.

(5) SLIP CONNECTOR BRACKETS.—The slip connector brackets should be parallel to the main shaft. To adjust, loosen the mounting screws, reposition the brackets, then tighten the mounting screws. Check the right hand slip connector bracket for clearance between it and the motor pinion.

(6) SLIP CONNECTOR.

(*a*) The first pair of contact springs (the left hand pair, front view) on each slip connector assembly are required to make contact when the distributor-transmitter is removed from the base assembly. The contact springs should be tensioned against each other

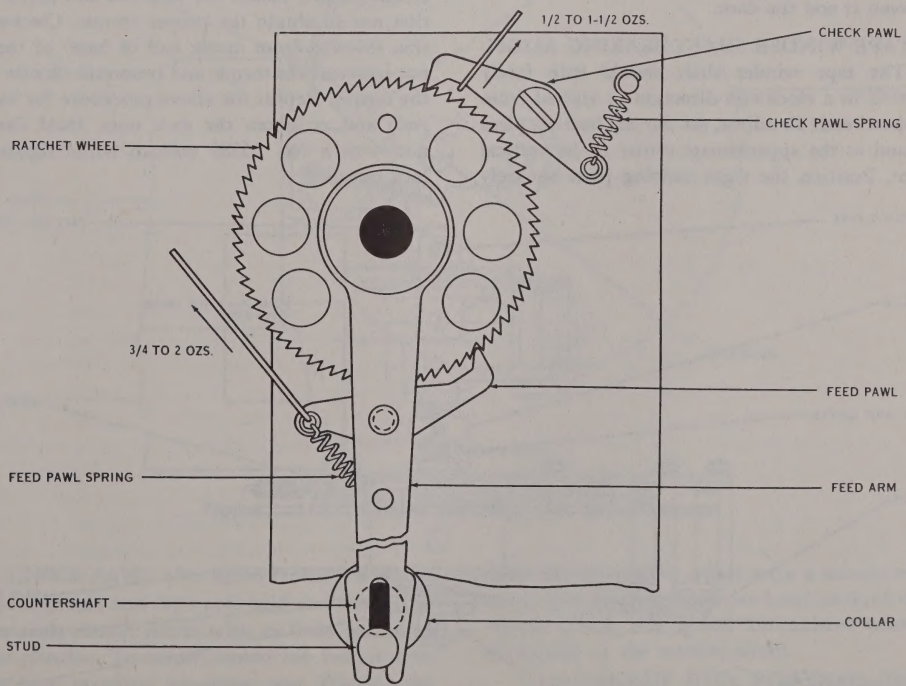

Figure 7—110. Check and Feed Pawl Spring

so that when the pressure of one spring is removed, its mate will follow approximately 3/64 inches. Gauge by eye.

(*b*) The contact springs, other than the pair in paragraph (*a*), are not to make contact when the distributor-transmitter is removed from the base assembly. There should be 0.020- to 0.060-inch clearance, between the springs in the pairs, gauged at the closest point between the contacting surfaces. The springs should be approximately parallel. The forming of the tips or terminals must not be altered to meet any requirement during adjustment.

(*c*) Adjacent springs, not in the same pair, shall have perceptible clearance when a distributor-transmitter is inserted into the slip connectors.

(7) COVER.—Cover plates should meet the minimum of clearance. To adjust, start at the front plate on the right side and work counterclockwise around the base. Loosen the mounting screws, position the plate, then tighten the mounting screws.

(8) DOOR STOP SCREW.—The door should be flush with the front edge of the distributor-transmitter top plate. To adjust, loosen the lock nuts on the door stop screws on the distributor-transmitters, adjust the stop screws, then tighten the lock nuts. The left cover plate may have to be repositioned for minimum clearance between it and the door.

(9) TAPE WINDER SHAFT BEARING ALIGNMENT.—The tape winder shaft should spin freely when rotated in a clockwise direction as viewed from the right-hand end. To adjust, set the left bearing plate squarely and at the approximate center of its vertical adjustment. Position the right bearing plate squarely and up or down until the shaft spins freely. Retighten the mounting screws.

(10) CHECK PAWL SPRING TENSION. *(See figure 7-110.)*—Hook an eight-ounce scale at the inside radius of check pawl engaging tip and pull at right angle to the pawl. A pull of ½ to 1½ ounces should be required to move the pawl completely out of engagement with the ratchet.

(11) FEED PAWL SPRING TENSION. *(See figure 7-110.)*—Hook an eight-ounce scale in the spring hole of the feed pawl and pull in line with the spring. A pull of ¾ to 2 ounces should be required to start the pawl moving. If these specifications are not met, replace the spring.

(12) RATCHET WHEEL HUB END PLAY. *(See figure 7-111.)*—There should be some end play, not more than 0.005 inch, between the ratchet wheel hub and bearing hub. To adjust, position the collar on the bearing by means of its setscrew.

(13) TAKE-UP REEL CLUTCH TORQUE. *(See figure 7-112.)*—With the motor running and the tape reel assembly operating, hook a 32-ounce scale in the hole of the left-hand reel disk. Pull on the scale at right angles to the radius of the reel and horizontally against the rotation of the reel. It should require from 11 to 16 ounces to hold the reel stationary. To adjust the clutch torque, loosen the lock nut and adjust the friction nut to obtain the proper torque. Clockwise rotation (viewed from motor end of base) of the friction nut increases the torque and counterclockwise decreases the torque. Repeat the above procedure for each of the reels and retighten the lock nuts. Hold the friction nut with a No. 76289 wrench while tightening the lock nut.

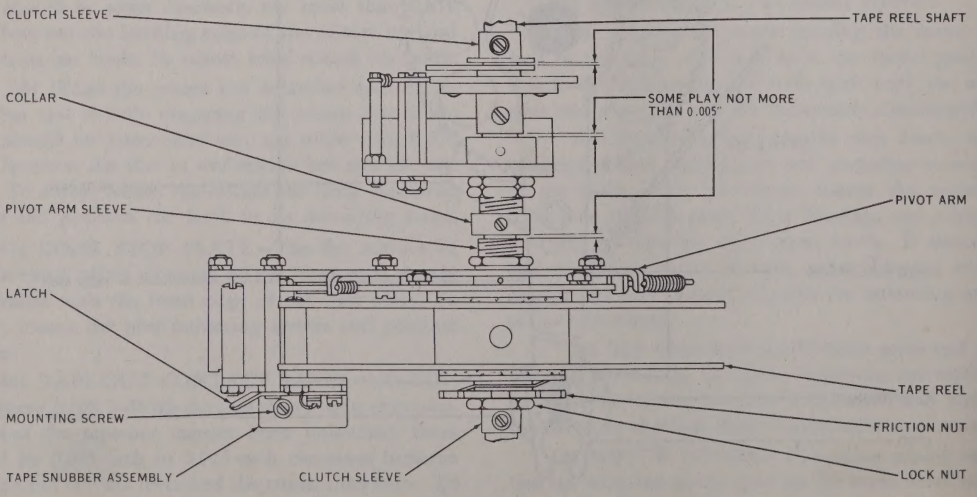

Figure 7—111. Tape Reel Ratchet Wheel Hub, Pivot Arm, and Latch

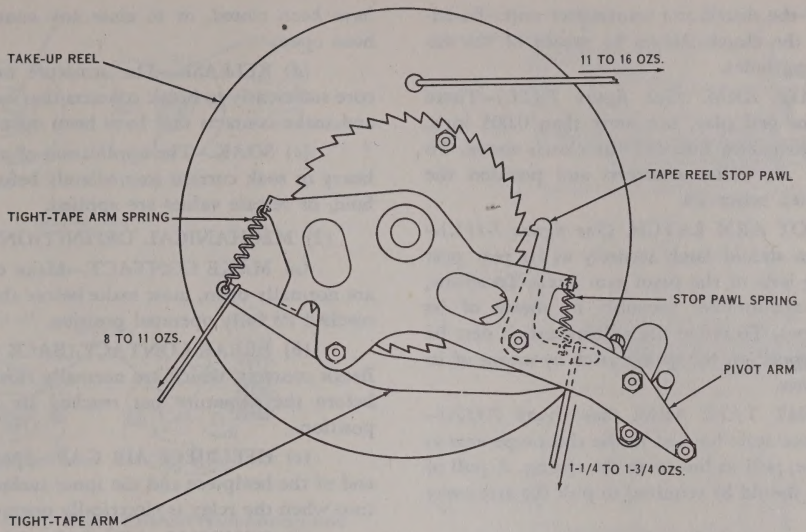

Figure 7—112. Tight Tape Arm and Stop Pawl Spring Tensions

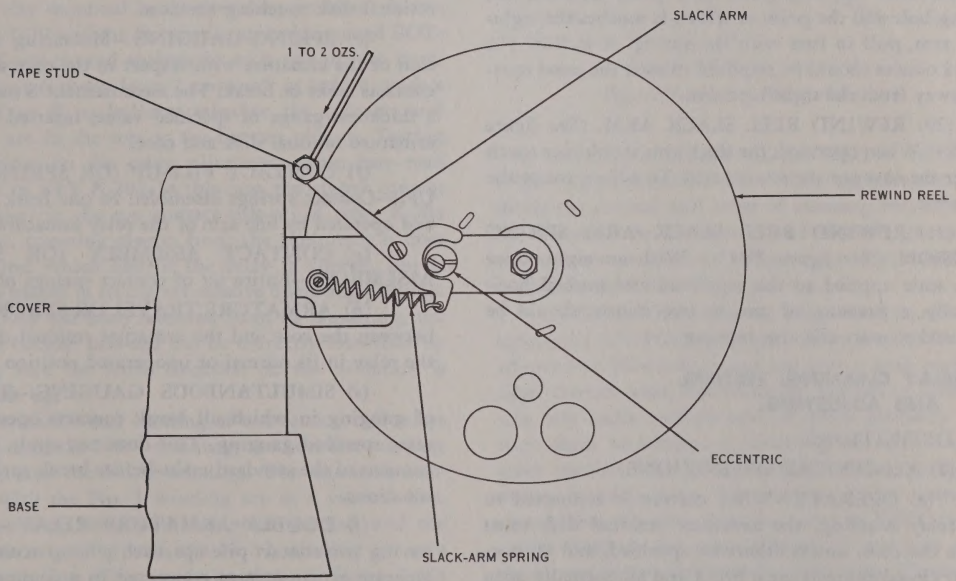

Figure 7—113. Rewind Reel Slack Arm Spring Tension

(14) CHECK PAWL. *(See figure 7-110.)*—With the motor running and one tape reel held stationary, the other two reels should rotate with as little backward motion as possible. To adjust, loosen the lock nut on the check pawl eccentric mounting post. Position the mounting post so the check pawl will drop into each tooth on the ratchet wheel with a minimum of overtravel between the check pawl and teeth of the ratchet wheel. Check this action throughout one complete revolution of the ratchet wheel.

(15) TAKE-UP REEL POSITION.—The take-up reels should be centered as nearly as possible with the

feed wheel of the distributor-transmitter unit. To adjust, position the clutch sleeves by means of the enlarged mounting holes.

(16) PIVOT ARM. *(See figure 7-111.)*—There should be some end play, not more than 0.005 inch, between the pivot arm hub and the clutch sleeve. To adjust, loosen the collar setscrews and position the collar. Retighten setscrews.

(17) PIVOT ARM LATCH. *(See figure 7-111.)*—The pivot arm should latch securely as its rear post drops into the hole of the pivot arm latch. To adjust, position the tape-snubber assembly by means of its mounting screws. To refine the adjustment, it may be necessary to reposition the spring latch by means of its mounting screws.

(18) TIGHT TAPE ARM. *(See figure 7-112.)*—With a 32-ounce scale hooked to the tight-tape arm at the spring hole, pull in line with the spring. A pull of 8 to 11 ounces should be required to pull the arm away from the stop.

(19) TAPE REEL STOP PAWL SPRING TENSION. *(See figure 7-112.)*—With an eight-ounce scale hooked over the stop pawl at a point between the spring hole and the point at which it touches the tight-tape arm, pull in line with the spring. A pull of 1¼ to 1¾ ounces should be required to start the pawl moving away from the tight-tape arm.

(20) REWIND REEL SLACK ARM. *(See figure 7-113.)*—When operated, the slack arm should not touch either the cover or the rewind reel. To adjust, rotate the eccentric.

(21) REWIND REEL SLACK ARM SPRING TENSION. *(See figure 7-113.)*—With an eight-ounce push scale applied to the tape stud and pushed horizontally, a pressure of one to two ounces should be required to start the arm moving.

7. RELAY CLEANING, TESTING, AND ADJUSTING.

a. DEFINITIONS.

(1) ELECTRICAL DEFINITIONS.

(*a*) OPERATE.—When current is connected to the relay winding, the armature residual disk must strike the core, unless otherwise specified, and all normally closed contacts must break and all normally open contacts must make.

(*b*) NON-OPERATE.—When current is connected to the relay winding, the armature does not move sufficiently to cause any normally open contact to close, or to cause any normally closed contact to open.

(*c*) HOLD.—After the relay has operated and the current is reduced, the armature does not move sufficiently to cause any closed contacts to open that have been closed, or to close any contacts that have been open.

(*d*) RELEASE.—The armature moves from the core sufficiently to break contacts that have been closed and make contacts that have been open.

(*e*) SOAK.—The application of a comparatively heavy or soak current immediately before the operate, hold, or release values are applied.

(2) MECHANICAL DEFINITIONS.

(*a*) MAKE CONTACT.—Make contacts, which are normally open, must make before the armature has reached its fully operated position.

(*b*) BREAK CONTACT (BACK CONTACT).—Break contacts, which are normally closed, must break before the armature has reached its fully operated position.

(*c*) HEELPIECE AIR GAP.—Space between the end of the heelpiece and the inner surface of the armature when the relay is electrically operated.

(*d*) RESIDUAL AIR GAP.—Distance between the face of the relay core and the inner surface of the armature with the relay electrically operated and the residual disk touching the core.

(*e*) SPRING GAUGING.—Measuring the position of the armature with respect to the core when the contacts make or break. The measurement is made with a thickness gauge of specified value, inserted between armature residual disk and core.

(*f*) CONTACT PILE-UP (OR SPRING PILE-UP.)—Contact springs assembled in one bank or stack and operated by one arm of the relay armature.

(*g*) CONTACT ASSEMBLY (OR SPRING ASSEMBLY).—Entire set of contact springs of a relay.

(*h*) ARMATURE TRAVEL OR STROKE.—Gap between the core and the armature residual disk with the relay in its normal or unoperated position.

(*i*) SIMULTANEOUS GAUGING.—The type of gauging in which all break contacts open on the same specified gauging. This does not apply to break contacts of the standard make-before-break spring combinations.

(*j*) DOUBLE ARMATURE RELAY.—A relay having two contact pile-ups, each pile-up actuated by a separate armature arm connected to a common armature.

(3) RELAY CONTACT NUMBERING AND WINDING LOCATIONS.—Contacts and springs in each pile-up in an assembly are numbered consecutively from 1 outward starting with the spring nearest the heelpiece. (See figure 7-114.) If a relay has four springs mounted in a single pile-up, contact 1 is on the spring closest to the heelpiece and contact 4 is on the spring farthest from the heelpiece. If a relay has springs

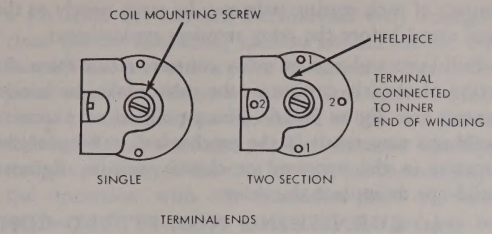

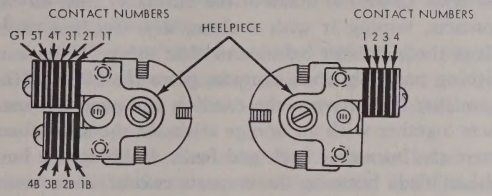

Figure 7—114. Relay Contact Numbering and Winding Locations

mounted in two pile-ups, the upper pile-up (looking at the relay mounted in its operating position) is designated TOP and the lower pile-up is designated BOTTOM. Contacts and springs in each pile-up are numbered consecutively from 1 outward, as before, with a suffix T or B to indicate whether the contacts and springs are in the top or the bottom pile-up. Testing instructions on the relay adjustment table may read SPG 8T or RLY K-204. In this case, the eighth contact (or spring) in the top contact pile-up of relay K-204 is meant, counting always from the heelpiece. It does not matter which end of the relay is viewed, but it must be placed in its correct relative operating position. If the relay has been removed from its mounting, the top and bottom pile-ups can be correctly identified by making sure the letter stenciled on the armature is right side up.

The armature-end winding of two-section coil relays is designated the No. 1 winding; the heel-end winding is designated the No. 2 winding. The terminals associated with the No. 1 winding are in a vertical line, when viewing relay with heelpiece vertical, and the terminals associated with the No. 2 winding are in a horizontal line. The upper portion of figure 7-114 shows the coil as mounted on the left side of the base as viewed from the rear. When the relay is mounted on the right side of the base, the location of the terminal connected to the inner end of the winding is the reverse of that shown; that is, for a single-wound coil the inner winding connects to the lower terminal.

(4) PARTS OF THE RELAYS.—Figure 7-115 illustrates the parts of the relays. The instructions below use the terminology shown on the figure.

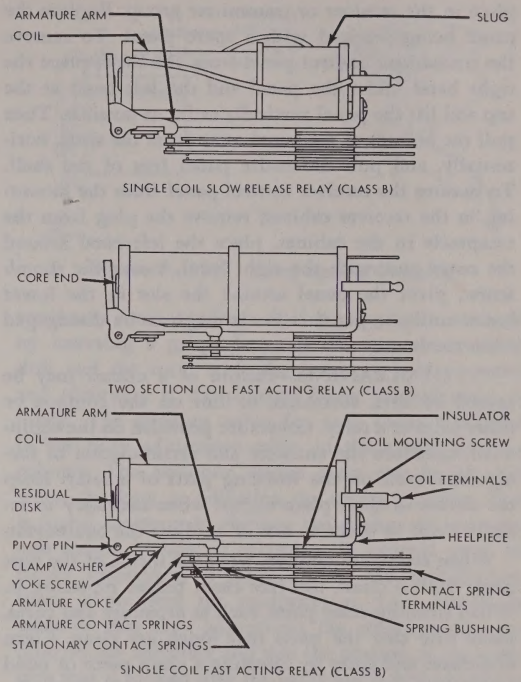

Figure 7—115. Parts of Relays

b. GENERAL RELAY ADJUSTMENT AND REPAIR PROCEDURES.—The following paragraphs indicate the method and order of cleaning and repairing the relays in the transmitter and receiver groups. Do not attempt to clean or adjust the relays unless thoroughly trained in relay repairing.

(1) GENERAL.—Control relays used in the Teletypewriter AN/FGC equipment do not require frequent adjustment. However, heavy use over a long period of time, contact wear, loss of spring tension or other factors may make readjustment of relays necessary to restore them to maximum operating efficiency. Adjustment consists mainly of bending contact springs by means of special tools. Never adjust a relay unless it is certain that the relay does not meet its TEST requirements. Refer to the relay adjustment tables to obtain the operating requirements for each relay. These sheets specify mechanical requirements (spring gauging) and electrical requirements (current flow). Determine if a relay needs adjustment by testing it against these specified values. Use the current-flow test set (Auto Elec H-88733), when available, to check the electrical operating characteristics of each relay. Refer to the operating instructions supplied with the test set.

(2) PREPARATION.—In order to clean any relay or control panel, the panel must be removed from its

place in the receiver or transmitter group. Replace the panel being serviced with a spare panel. To remove the transmitter control panel from the shelf, place the right hand under the panel and the left hand at the top and lift the panel vertically as far as possible. Then pull the bottom of the panel away from the shelf, horizontally, and pull the entire panel free of the shelf. To remove the receiver control panel from the mounting in the receiver cabinet, remove the plug from the receptacle in the cabinet, place the left hand around the cover and, with the right hand, loosen the thumb screw, pivot the panel around the slot in the lower brace until the panel is low enough to be disengaged from the brace.

(3) CLEANING.—Failure of a circuit may be caused by dirt, corrosion, or lint on the contacts or other parts of a relay. Covers are provided on the equipment to reduce the entrance and accumulation of foreign materials on the working parts of a relay. Keep the covers in their place except when necessary to remove them in order to test or readjust the equipment.

When relays are cleaned, wipe the inside of the dust cover with a clean, lint-free cloth before replacing it. When cleaning relay parts, such as armature and cores, make sure that the parts that touch are clean. Clean armatures and cores by inserting a clean piece of bond paper between the armature and the core. Press the armature toward the core to apply a slight pressure between the paper and the part being cleaned. Then withdraw the paper against this pressure. Repeat this operation several times, using a clean spot on the paper each time, until dirt is no longer deposited on the paper.

(4) BURNISHING.—Pitted or built-up contacts on relays do not mean that the relay must be replaced. Replace the relay only when the contact is worn down to the base metal. In the case of twin contacts, one contact of each mating pair may be worn nearly to the base metal before the relay requires replacement.

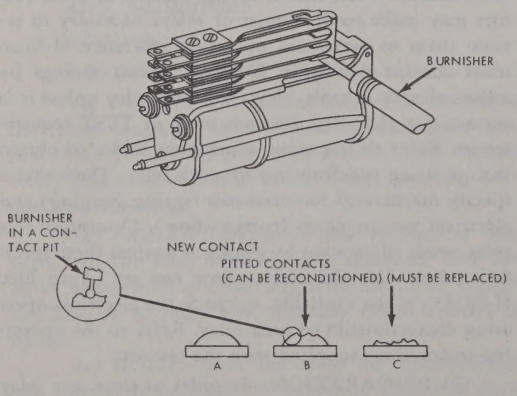

Figure 7—116. Relay Contact Conditions

Build-ups and pits on relay contacts result from the action of electric current as the relay makes or breaks contact (see figure 7-116). Sharp-pointed or excessive build-ups may result in the mechanical locking of the contacts in the operated or closed position. Remove build-ups or replace the relay.

(a) BURNISHING NON-PITTED CONTACTS.—Contacts that fail during operation may be cleaned with a contact burnisher to remove any foreign material. Clean the blade of the burnisher used on the contacts, wiping it with a clean, dry, lint-free cloth. Clean the burnisher before and after using. When burnishing normally open contacts, place the blade of the burnisher flat between the contacts and press the contacts together with an orange stick. At the same time, move the burnisher back and forth. Rubbing the burnisher blade between the contacts two or three times is sufficient. When burnishing normally closed contacts, the tension of the spring of the contact is sufficient pressure against the burnisher blade. After burnishing, check that the requirements covering contact make and contact separation are still met.

Repeated burnishing tends to increase the contact separation and to reduce the contact make. Readjust the contacts if necessary.

When unable to clear contact troubles by burnishing only, brush the contacts and, if necessary, clean and flush the contacts with solvent. Dip the flat end of a clean toothpick about one-half inch into the solvent. Deposit the liquid on the contacts (held slightly separated) without rubbing. Dip the flat end of another toothpick into the solvent and again deposit the liquid on the contact without rubbing. This flushes away the dirt loosened by the first application.

CAUTION

Do not allow the solvent to come in contact with the relay spool-heads and insulators. Solvent may damage the relay and wiring to the extent that the relay may have to be replaced. When brushing the contacts, care should be exercised so as not to damage the contact springs and to minimize the scattering of dust particles.

Allow the liquid on the contacts to evaporate. When the contacts are thoroughly dry, burnish them as above. Be sure that no foreign material remains on the contacts and no residue from the solution remains. Brush the contacts with a toothbrush of medium stiffness or equivalent.

(b) BURNISHING PITTED CONTACTS.—Burnish the contact as described above, with the flat side of the contact burnisher. Do not attempt to remove

a pit from the contact, but burnish only enough to clean the flat contacting surfaces around the pit. Next, burnish the pit with a wire burnisher. Place the ball point of the burnisher in the pit (see figure 7-116). If the pit is small, rotate the barrel of the tool between the thumb and the finger, and at the same time apply a slight pressure on the tool against the contact. Repeat the operation with the burnisher held at various angles until the entire surface of the pit has been cleaned. After cleaning the pit, burnish again using the flat blade of the burnisher (see figure 7-116). When burnishing is completed, check the contact make and break requirements.

(5) INSPECTION AND TESTING PROCEDURES.—Before adjusting relays, inspect and test them according to the following routines. Readjust relays only when necessary.

(*a*) Check the relay for loose or bent parts, mechanical defects, contact alignment, and clearance from other relays. Make sure the relay is approximately level, the mounting screws are tight, and there is at least 1/32 of an inch clearance between any part of the relay and the closest part of the adjacent relays. Observe the alignment of mating contacts. Maximum allowable deviation is about one-third of the contact diameter, not to exceed 40 percent, judged visually.

(*b*) Check the heelpiece air gap. (See figure 7-117.) The heelpiece air gap must be large enough to keep the armature from striking or binding against the heelpiece, but must be as small as possible in order to obtain the maximum magnetic strength.

(*c*) Check the spring gauging. (See figure 7-118.) This is measurement of the movement of the armature or movable contact springs in relation to the

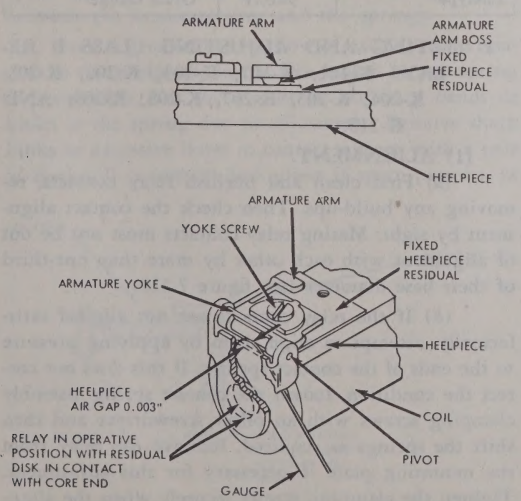

Figure 7—117. Relay Heelpiece Air Gap

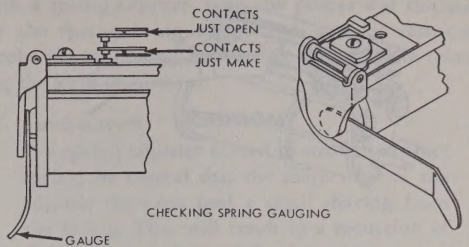

Figure 7—118. Relay Spring Gauging

stationary contact springs. Spring gauging is measured by inserting a gauge between the armature residual disk and the core, with the armature held operated, and observing if the contacts being gauged make or break. The gauging value for each contact is listed in the relay adjustment table, in the spring gauging column. The armature stroke must also be checked when checking or adjusting the spring gauging. If it is found necessary to readjust the stroke, the armature arm should be bent as necessary. In general, once the stroke adjustment is made during the manufacture, there is no need for readjustment. Care should be taken so that after adjustment the armature does not bind on the heelpiece and that the portion of the armature that is formed over the heelpiece is still parallel to the heelpiece and rests on the residual plate on the heelpiece with the relay inoperative (see figure 7-117).

(*d*) Check the electrical operating requirements. Use a current-flow test set to test the operate and non-operate current values listed in the relay adjustment tables 7-22 and 7-23. Connect the current-flow test set to the relay in accordance with directions in the testing column. Use the resistance or current values in the test column. Before testing relays, apply a saturating current to the relay for at least one second in the same direction as the normal current flow. Do not apply test current to the coil until one second after the saturation period. Set the switches on the test set in the OPR and N OPR row to the approximate test resistance value indicated on the relay adjustment table. Operate the TEST switch to the OPR position. Adjust the total resistance until the meter indicates the specified test operate value of current. Operate the TEST switch several times, observing if the armature operates fully. If the armature does not operate fully, the armature contact springs have too much tension. Operate the TEST switch to the N OPR position. Adjust the total resistance in the N OPR row of resistance-bank switches until the specified test non-operate current is indicated on the meter. Operate the TEST switch from the normal to the N OPR position several times, observing whether the armature operates. If the armature operates with the non-operate value of current-flow, the armature springs do not have sufficient tension.

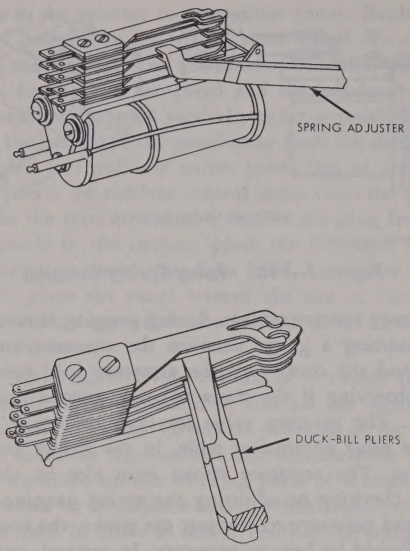

Figure 7—119. Relay Spring Adjustment

(*e*) Readjust relays that do not meet the spring gauging or the current-flow limits within the specified tolerances. Minor variations from the specified values are to be expected and are not cause for readjustment. Adjust relay contacts to meet spring gauging requirements by forming the stationary contact springs with a relay contact spring adjuster (see figure 7-119). Adjust the tension of the movable or armature contact springs with a spring adjuster. If any readjustments are required to meet the electrical requirements, the gauging should be rechecked.

(6) RELAY ADJUSTMENT TABLE.—The relay adjustment table lists the mechanical requirements and electrical operating requirements. Mechanical requirements covered are the armature stroke and contact spring gauging. Electrical requirements covered are the minimum current which should cause the relay armature to operate, the maximum current that can flow in the relay coil without operating the armature, and in one case, the minimum current required to hold the relay operated. The columns are explained as follows:

(*a*) The SPRING GAUGE column lists the decimal values indicating the gaps between the armature residual disk and the core as measured with a thickness gauge, at the point in the armature travel when the contact mounted on a spring makes or breaks with its mating contact. The value farthest to the right is the armature travel (stroke).

(*b*) The TEST FOR column indicates the condition for the values in the RESISTANCE and CURRENT columns.

(*c*) The RESISTANCE column indicates the values to be used with a resistance-type test set and a 115 volt ±1 volt d-c power input.

(*d*) The CURRENT column specifies the current values for operate and non-operate tests of relays with the current-flow test set. The resistance in the test set should be adjusted until these values of current are indicated on the meter. Under the sub-heading TEST are listed the allowable limits when testing a relay; under the sub-heading READJUST are listed the values to use when readjusting the relay. Do not exceed voltage rating of relay.

(*e*) The TEST INSTRUCTIONS column gives any special instructions and indicates the points for connecting the current-flow test set to the relay under test.

(7) TOOLS AND TEST EQUIPMENT.—Table 7-21 lists the tools suggested for relay maintenance (common hand tools are not included).

TABLE 7-21. TOOLS AND TEST EQUIPMENT SUGGESTED FOR RELAY TESTING AND ADJUSTING

SUPPLIER	SUPPLIER'S PART NUMBER	ITEM
Automatic Electric	H-88733	Current-Flow Test Set
Teletype	94643	Contact Burnisher
Teletype	94646	Orange Stick
Automatic Electric	H-88504-1	Spring Adjuster
Automatic Electric	H-88504-2	Spring Adjuster
Teletype	151378	Thickness Gauge Set
Automatic Electric	H-88436	Duck-Bill Pliers
Automatic Electric	H-88502-1	Armature Adjuster
Automatic Electric	H-88503-1	Armature Adjuster
Automatic Electric	H-16290-7	Spring-Adjuster Pliers
Teletype	89928	Adjusting Key
Teletype	98631	Gram Gauge

c. TESTING AND ADJUSTING CLASS B RELAYS K-101, K-102, K-103, K-202, K-203, K-204, K-205, K-207, K-208, K-209, AND K-210.

(1) ALIGNMENT.

(*a*) First clean and burnish relay contacts, removing any build-ups. Then check the contact alignment by sight. Mating relay contacts must not be out of alignment with each other by more than one-third of their base diameter (see figure 7-120).

(*b*) If the relay contacts are not aligned satisfactorily, attempt to align them by applying pressure to the ends of the contact springs. If this does not correct the condition, loosen the contact spring assembly clamping screws with an offset screwdriver and then shift the springs as required. Remove the relay from the mounting plate if necessary for this adjustment. Tighten the clamping screws securely when the alignment is completed (see figure 7-120).

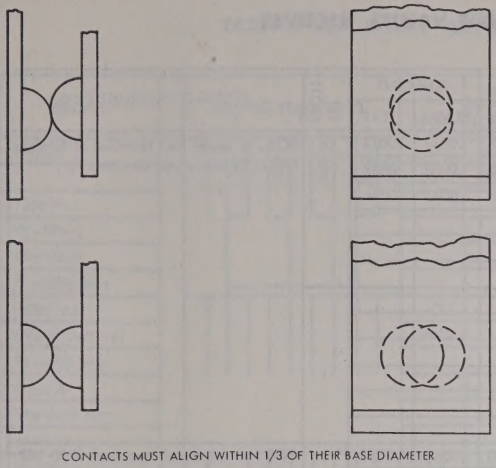

Figure 7—120. Relay Contact Alignment

Note

This is an emergency method and is not to be used if a new relay is available for replacement. The clamping screws are tightened under pressure at the factory and clipped, making removal difficult; do not force the clamping screws if they do not unscrew easily.

(*c*) There must be a minimum of 0.007 inch clearance between the armature arms and the sides of the heelpiece in any position the relay may assume (see figure 7-121).

(*d*) In either the normal or operated position, there must be a clearance of 0.010 inch minimum between springs not designed to make contact and between the armature arm and the springs.

(*e*) A gradual convex bow of 0.025 inch, in relation to the heelpiece, in the free length of any spring is permissible, but there must be no sharp bends or kinks in the spring due to adjustment. Remove sharp kinks or excessive bows in contact springs with a pair of duck-bill or smooth-jaw pliers if space permits, or with a spring adjuster, with the proper slot thickness for the spring being adjusted if space is restricted. Stroke the tool along the contact spring while removing the kink or bow.

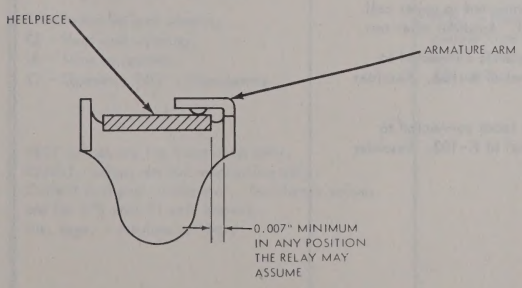

Figure 7—121. Relay Armature Clearance

CAUTION

If a spring adjuster is used to stroke a contact spring, be careful that the sharp edge of the adjuster does not peel a small shaving from the spring. This will result in a reduction of the life of the relay, and the shaving may cause a short circuit between contact springs which is extremely difficult to locate.

Note

Armature springs may also be bowed from spring bushing to contacts when operated or normal, provided the above requirements are met when springs are not making contact.

(*f*) All contact springs, when assembled on the relay, should line up uniformly with respect to each other and to the relay structure proper as gauged visually.

(*g*) The spring bushings should be approximately in alignment with the center of the springs against which they strike as gauged visually.

(*h*) The outer surface of the portion of the armature arm which actuates the spring bushing should be approximately parallel to the heelpiece, as gauged visually. The inner surface should make contact with the heelpiece residual plate only on the armature boss located on the heelpiece side of armature arm. This contact must be a minimum of 0.010 inch, as gauged visually from the edge of the heelpiece residual plate in any position permitted by the end play of the armature on its bearings (see figure 7-117).

(*i*) The relay armature must not bind on its bearings. When practicable, the requirement of freedom from bind may be considered met if, with the springs held away from the armature and the relay held with the armature end up and the coil core axis vertical, the armature, of its own weight, drops against the end of the coil core.

(2) HEELPIECE AIR GAP. *(See figure 7-117.)*— Check the relay armature to make sure it moves freely in its bearings, without excessive side play. The armature should clear the end of the heelpiece, with an air gap of not more than 0.004 inch. Measure at the closest point with the armature operated. To readjust, loosen the yoke screw and insert a 0.003 inch thickness gauge between the armature and the heelpiece. Shift the armature yoke along heelpiece until the armature presses firmly against the thickness gauge. Tighten yoke screw after completing the adjustment.

TABLE 7-22. RELAY ADJUSTMENT VALUES, RECEIVER

RELAYS	SPRING GAUGING	TEST FOR	RESISTANCE READJ.	RESISTANCE TEST	CURRENT READJ.	CURRENT TEST	SEE NOTE	TESTING INSTRUCTIONS
K-101		O	14300	13650	.0071	.0074	6	POS. to upper coil terminal of K-101. NEG. to connector pin No. 1.
		NO	16650	17550	.0062	.0059		
129398		H	73900	71600	.0015	.0016		
PG-16034-								
B13A								
PP-197-2								
2000 ohm	.016 .024 .044	O						
Class B		NO						
SR								
Short Arma-								
ture Arm								
K-102	.016 .025	O	17200	16400	.0060	.0063	7	POS. to upper coil terminal of K-102. NEG. to connector pin No. 1.
		NO	19750	21000	.0053	.0050		
128616								
PP-1228-1								
PP-197-2								
2000 ohm								
Class B		O						
SR		NO						
Short Arma-								
ture Arm								
K-103		O	9920	9410	.0075	.0077	8	POS. to connector pin No. 12. NEG. to lower coil terminal of K-103.
		NO	11760	12450	.0066	.0062		
128612		R			.0012	.0013		
PP-1227-1								
PP-196-2								
2500 ohm								
Class B	.010 .010 .012 .022 .030 .040	O						
SR		NO						
Short Arma-								
ture Arm								

EXPLANATION OF TERMS

SR - Slow to restore.
O - Operate, No-Nonoperate, H-Hold.
R - Release current.

TEST values are for inspection only.
READJ. values are for readjusting only.

Current is shown in amperes. Resistance values are for 115-volt ± 1 volt battery.
POS. - Positive OUT TEST terminal of current flow test set.
NEG. - Negative OUT TEST terminal of current flow test set.

NOTES

6. Unsolder lead connected to upper coil terminal of K-101. Resolder after test.
7. Unsolder two (2) leads connected to upper coil terminal of K-102. Resolder after test.
8. Unsolder two (2) leads connected to lower coil terminal of K-103. Resolder after test.

TABLE 7-23. RELAY ADJUSTMENT VALUES, TRANSMITTER

RELAYS	SPRING GAUGING	TEST FOR	RESISTANCE READJ.	RESISTANCE TEST	CURRENT READJ.	CURRENT TEST	SEE NOTE	TESTING INSTRUCTIONS
K-202	.008 .008 .008 .012 .022	O	14850	13350	.0061	.0066	1	Relay to be tested on #2 winding Outside spring to be held away for margin.
		NO	18350	20450	.0052	.0047	2	
128614								
PP-195-1								
PP-195-2								
#1-2000 ohm								POS. to lower slip connection No. 18. NEG. to lower slip connection No. 7.
4000 ohm		O						
(Noninductive)		NO						
#2-4000 ohm								
Class B								
Standard Arm-								
ature arm								
K-203	.008 .012 .022	O	24500	24100	.0042	.0048		POS. to upper clip connection No. 13. NEG. to spg. 7 of K-208.
		NO	25900	26400	.0039	.0038		
128615								
PP-1553-1								
D-28112-A								
3300 ohm								
Class B	.008 .012 .022	O						
		NO						
Double Arma-								
ture Relay								
Standard Arm-								
ature Arm								
K-204	.018 .018 .024 .044	O	8490	7850	.0104	.0111		Ins. Spgs. 3B and 4B of K-204. POS. to upper slip connection No. 2. NEG. to lower slip connection No. 7.
		NO	10060	10930	.0092	.0086		
128613								
PP-196-1								
PP-196-2								
2500 ohm								
Class B	.018 .018 .024 .024 .044	O						
SR		NO						
Double Arma-								
ture Relay								
Short Armature								

EXPLANATION OF TERMS

#1 - Armature end winding.
#2 - Heel end winding.
SR - Slow to restore.
O - Operate, NO - Nonoperate.

TEST values are for inspection only.
READJ. values are for readjusting only.
Current is shown in amperes. Resistance values are for 115 volt ±1 volt battery.
Ins. spgs. - Insulate springs.

POS. - Positive OUT TEST terminal of current flow test set.
NEG. - Negative OUT TEST terminal of current flow test set.

NOTES

1 - Spring tension is light but outside armature spring (spring #8) is to have 20-25 grams spring tension.

2 - Armature need not strike core on operate test.

TABLE 7-23. RELAY ADJUSTMENT VALUES, TRANSMITTER—Continued

RELAYS	SPRING GAUGING	TEST FOR	RESISTANCE READJ.	RESISTANCE TEST	CURRENT READJ.	CURRENT TEST	SEE NOTE	TESTING INSTRUCTIONS
K-205	.018 .018 .024 .044	O	8490	7850	.0104	.0111		Ins. spgs. 5T and 6T of K-205. POS. to upper slip connection No. 1. NEG. to lower slip connection No. 7.
		NO	10060	10930	.0092	.0086		
128613								
PP-196-1								
PP-196-2								
2500 ohm								
Class B	.018 .018 .024 .024 .044	O						
SR		NO						
Double Armature Relay								
Short Armature Arm								
K-207	.008 .008 .012 .022	O	13490	12690	.0091	.0100		Ins. spgs. 1B and 2B of K-205. Ins. spgs. 1B and 2B of K-204.
		NO	15330	16250	.0081	.0077		
128611		R			.0051	.0049		
PP-192-3								
D-283112-A								
3300 ohm								POS. to upper coil terminal of K-207 or spg. 6T of K-205. NEG. to lower slip connection No. 7.
Class B	.008 .008 .012 .022	O						
		NO						
Double Armature Relay								
Standard Armature Arm								
K-208		O	9920	9410	.0075	.0077	3	POS. to marking contact of K-206.
		NO	11760	12450	.0066	.0062	4	NEG. to upper coil terminal of K-208.
128612		R			.0012	.0013		
PP-1227-1								
PP-196-2								
2500 ohm								
Class B	.010 .010 .012 .022 .030 .040	O						
SR		NO						
Short Armature Arm								

EXPLANATION OF TERMS

SR - Slow to restore.
O - Operate, NO - Nonoperate.
R - Release current.

TEST values are for inspection only.
READJ. values are for readjusting only.
Current is shown in amperes. Resistance values are for 115 volt ±1 volt battery.
Ins. spgs. - Insulate springs.
POS. - Positive OUT TEST terminal of current flow test set.

NEG. - Negative OUT TEST terminal of current flow test set.

NOTES

3. Unsolder lead to upper Coil terminal of K-208. Resolder after test.

4. Armature is spring biased to spacing contact.

TABLE 7-23. RELAY ADJUSTMENT VALUES, TRANSMITTER—Continued

RELAYS	SPRING GAUGING	TEST FOR	RESISTANCE READJ.	RESISTANCE TEST	CURRENT READJ.	CURRENT TEST	SEE NOTE	TESTING INSTRUCTIONS
K-209	.008 .008 .012 .022	O	13490	12690	.0091	.0100		POS. to upper slip connection No. 19. NEG. to upper slip connection No. 6.
		NO	15330	16250	.0081	.0077		
128611		R			.0051	.0049		
PP-192-3								
D-283112-A								
3300 ohm								
Class B	.008 .008 .012 .022	O						
		NO						
Double Armature Relay								
Standard Armature Arm								
K-210	.018 .018 .024 .044	O	8490	7850	.0104	.0111	5	POS. to upper slip connection No. 12. NEG. to spg. 1T of K-207.
128613		NO	10060	10930	.0092	.0086		
PP-196-1								
PP-196-2								
2500 ohm								
Class B								
SR	.018 .018 .024 .024 .044	O						
		NO						
Double Armature Relay								
Short Armature Arm								
		O						
		NO						
		O						
		NO						

EXPLANATION OF TERMS
SR - Slow to restore.
O - Operate, NO - Nonoperate.
R - Release current.
TEST values are for inspection only.
READJ. values are for readjusting only.
Current is shown in amperes. Resistance values are for 115-volt ±1 volt battery.
Ins. spgs. - Insulate springs.
POS. - Positive OUT TEST terminal of current flow test set.

NEG. - Negative OUT TEST terminal of current flow test set.

NOTES
5 - Place Number-Delete switch in Number position.

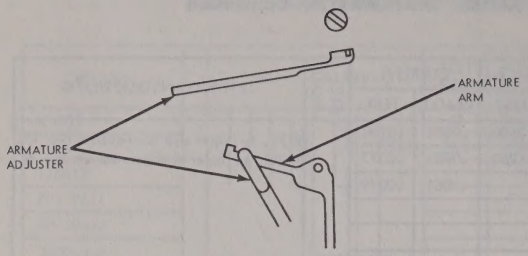

Figure 7—122. Relay Armature Adjustments

(3) ARMATURE TRAVEL (STROKE). — The armature travel (stroke) value is specified in the relay adjustment table under the SPRING GAUGING column (see figure 7-122). A tolerance of 0.002 inch for inspection may be allowed. A gauge 0.003 inch larger than the armature travel value should not enter between the end of the residual disk and the coil core on standard armature relays. For short arm armatures, use a 0.005 inch larger gauge. Check with the relay not energized.

Note

Under normal operating conditions, the armature should require no readjustment. However, if such readjustment is necessary, use armature adjuster Automatic Electric H-88503-1 or equivalent for mounted relays and armature adjuster Automatic Electric H-88502-1 or equivalent for unmounted relays.

(*a*) When the first spring of a spring pile-up is a back contact, the armature arm boss must leave the fixed heelpiece residual when a thickness gauge of 0.002 inch less than the value specified for the stroke is inserted between the armature residual disk and the coil core. See figure 7-117.

Note

In the case of a relay having two spring pile-ups, the above requirement applies only when the first spring in each spring pile-up is a back contact.

(*b*) When the difference between the values specified for stroke gauging and the highest make contact gauging is 0.005 inch or more, the armature arm boss should leave the fixed heelpiece residual plate when a thickness gauge of 0.002 inch less than the value specified for the stroke is inserted between the armature residual disk and the coil core.

(*c*) On a relay with two spring pile-ups, with the armature in the non-operated position, both armature arms should be approximately in contact with the fixed heelpiece residuals and in no case should there be more than 0.004-inch clearance as judged visually.

(4) SPRING GAUGING.—The values of spring gauging shown in the relay adjustment table establish the correct sequence of make or break of relay contacts. Relays must meet the specified values within tolerances. If the spring adjustment is within TEST limits, no readjustment is necessary. Spring bushings and contacts will wear when subjected to heavy duty service and so readjustments may be necessary occasionally. Check the spring gauging for each contact spring in the relay contact assembly. Make or break contacts should just make or break with the gauge of the value called for inserted between the armature residual disk and the core with the armature operated. In normal operation, the contacts make or break within allowable tolerances.

(*a*) Make contacts should not make with the plus tolerances, and should make with the minus tolerances; break contacts should not break with the plus tolerances and should break with the minus tolerances.

(*b*) For adjustment, a variation from the values specified of plus or minus 0.001 inch in the case of standard armatures, of 0.002 inch in the case of short arm armatures, may be allowed except as specified under the following paragraphs (*d*) through (*g*).

(*c*) Upon inspection, a variation of the values specified of plus or minus 0.002 inch in the case of standard armatures, or 0.004 inch in the case of short arm armatures, may be allowed except as specified under the following paragraphs (*d*) through (*g*).

Note

A pair of contacts consists of one of the contacts of a lever spring and one of the contacts of a stationary spring. For example, a make combination consists of two pairs of contacts, since each spring has two contacts.

(*d*) No variation from the specified values can be permitted which will allow the normal or operated contact gap to be less than 0.005 inch as gauged by eye or which would reduce clearance between springs below limits specified under paragraph 7.*c*.(1)(*d*).

(*e*) One of the two pairs of associated contacts may be outside the above tolerances, in either direction, if the two pairs make or break within 0.003 inch of each other at the contacts as judged visually.

(*f*) On make-before-break combinations where the difference between the values specified for the make and break adjustment are as indicated below, the variation allowed for Inspection or Readjustment as determined by paragraphs 7.*c*.(4)(*b*) and 7.*c*.(4)(*c*) should not cause the last break contact of the pair to break when a gauge is used which is the indicated amount smaller than the gauge on which the first make contact of the pair actually makes:

Difference between make and break specified (for short arm armature)	The last break contact of a pair should not break with the following size gauge smaller than the gauge on which the first make contact of a pair actually makes.	
	For Inspection	*For Adjustment*
0.009 inch	0.007 inch	0.008 inch
0.010 inch	0.007 inch	0.008 inch
0.011 inch	0.008 inch	0.009 inch

(*g*) All break contacts which have a gauging value greater than one or more make contacts on the same relay must be open before these make contacts close.

When the difference between the values specified for the break and make contacts is 0.003 inch or less, the first pair of make contacts must not make when a gauge is used which is 0.002 inch less for Adjustment or 0.001 inch less for Inspection than that on which the last pair of break contacts actually break.

When the difference between the values specified for the break and make contacts is 0.004 inch or more, the first pair of make contacts should not make when a gauge is used which is 0.002 inch less than that on which the last pair of break contacts actually break.

On relays having short arm armatures, the first pair of make contacts must not make when a gauge which is 0.005 inch less than that on which the last pair of break contacts actually break is used.

(*h*) A typical procedure for spring gauging, using relay K-203 as an example, is as follows: starting with the No. 1 contact springs, insert a 0.012-inch gauge between the armature residual disk and the core. Operate the armature. Contacts 1 and 2 in both pile-ups should just break. Reduce the gauge to 0.008 inch and observe that the No. 3 contact springs move far enough to make with the No. 4 contacts. Notice that the break contacts open before the make contacts close. Tolerances, as described above, allow for slight deviations from the values specified.

(*i*) Readjust the stationary contacts when necessary to meet the gauging requirements. Use a spring adjuster, or duck-bill pliers, when the springs are accessible (see figure 7-119). Check the contact springs for straightness and proper tension after readjustment. The springs should be approximately parallel to the heelpiece with the armature in the unoperated position.

(5) SPRING TENSIONING.

(*a*) Readjust the tension of armature contact springs of relays that do not meet the TEST limits in the current-flow test. If, upon testing, the relay is within the range of the TEST values, no readjustment is necessary, but any relay whose operating range is outside of the TEST values should then be readjusted within READJ. limits. If the relay operates on the non-operate test, increase the armature contact spring tension. Engage the spring in the slot in one end of the spring adjuster, at a point near the insulator. Bend the spring toward the heelpiece (see figure 7-119). Perform this adjustment for each armature contact spring in the relay contact assembly, taking care to distribute the tension evenly. Do not put too much tension in the springs or the relay will not operate on the operate test. The tension adjustment may change the spring gauging. Recheck the spring gauging, then test for operate and non-operate requirements with the current-flow test.

CAUTION

Take care not to place sharp bends or kinks in springs during bending operation.

(*b*) If the tensioning adjustment does not result in sufficient spring tension, return the spring to its original shape. Place the spring adjuster on the desired armature contact spring close to the clamping plate, near the terminal end of the relay. Turn the spring adjuster in such a direction as to move the armature contact spring away from the heelpiece, bending it slightly. The armature spring will no longer make contact with its break (stationary) contact.

(*c*) Stroke the armature contact spring by sliding the spring adjuster along the spring while pressing the spring slightly upward and with the tool held at an angle with respect to the spring. The center of the bowed spring will be farther away from the heelpiece than either the clamped or the contact end.

(*d*) Now bend the armature contact spring back toward the heelpiece, placing the adjusting tool on the spring in the same location as before. Bend the armature contact spring until the contacts rest against its break (stationary) contacts with sufficient pressure to remove the slight bow from the spring. The relay armature will now operate against greater spring tension.

(*e*) If the relay fails to operate on the operate test or when too much tension is put in the armature springs during adjustment, bend the armature contact springs slightly away from the heelpiece to reduce the tension.

(*f*) Readjust twin-contact relay springs carefully so that both contacts remain aligned and make at nearly the same time. If both contact pairs do not make fully within the limit of spring gauging tolerance, readjust the springs until this requirement is met.

(*g*) When "Simultaneous Gauging" is indicated in the relay adjustment table, it is necessary that the armature springs be adjusted to provide sufficient tension so that each armature spring bushing shall touch the preceding armature spring and/or the armature arm. This requirement is considered met when a mini-

mum 0.010-inch follow (deflection) is observed visually in all back contacts. It is not necessary that this requirement be met for a particular spring combination having either a separate margining value or a gram tension note specified in the individual relay adjustment table for that particular spring combination of the spring assembly.

Note

In this section, the term "back contact" does not apply to the back contacts of standard make-before-break spring combinations.

(*h*) When there are no back contacts on the relay spring assembly, it is necessary that the armature contact springs be adjusted to provide sufficient tension (approximately minimum 10 grams) so that each armature spring bushing will touch the preceding armature contact spring and/or the armature arm.

(*i*) Relays must fully operate all contact springs and the armature residual disk must touch the magnet core on the OPERATE tests shown on the relay adjustment sheet. Relays should not open any break (back) contact circuits or close any make contact circuits on the NON-OPERATE tests shown on the relay adjustment sheet. Contact spring tension will be inspected in accordance with the TEST values given on the relay adjustment sheet, and adjusted in accordance with the READJUST values.

(*j*) Before testing or readjusting relays, apply a saturating current to the relay for at least one second. The saturating current flow must be in the same direction as the normal current flow. Do not apply test current to the coil until one second after the saturation period.

Note

When readjusting and testing, this requirement may be met by applying 115 volts in series with a protective resistance of approximately 150 ohms.

d. TESTING AND ADJUSTING THE CLASS S RELAY K-104. *(See figure 7-123.)*

(1) ALIGNMENT.

(*a*) First, clean and burnish contacts and check alignment (see paragraph 7.*c.*(1)(*a*) and 7.*c.*(1)(*b*) of this section).

(*b*) All contact springs, when assembled on the relay, shall line up uniformly with respect to each other and to the relay structure as gauged visually.

(*c*) A gradual convex bow of 0.015-inch in relation to the heelpiece, in the free length of any contact spring is permissible, but there should be no sharp bends or kinks in the springs due to adjustment. (See paragraph 7.*c.*(1)(*e*) of this section for removal of sharp bends or kinks and observe CAUTION.)

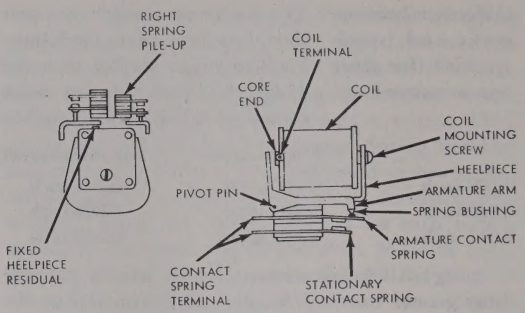

Figure 7-123. Single Coil Fast Acting Relay (Class S)

(*d*) Spring operating bushings should be approximately in alignment with the center of and perpendicular to the springs against which they strike, as gauged visually.

(*e*) The armature must be parallel to the heelpiece end, as gauged visually. This relationship is set at the factory and should require no readjustment (see figure 7-124).

(*f*) With the springs held away from the armature and the relay held with the armature end up and the coil vertical, the armature should, of its own weight, drop against the end of the core.

(*g*) The relay armature should not bind on its bearings or on the heelpiece and must have perceptible end play.

(*h*) The flat portion of the armature arm that extends over the heelpiece should be approximately parallel to the flat side of the heelpiece and a minimum of 0.005-inch from the heelpiece, as judged visually (see figure 7-124).

(*i*) In any position allowed by the side play of the armature, the armature arm shall be a minimum of 0.015-inch from the heelpiece, as judged visually.

(*j*) In any position allowed by the side play of the armature, the spring buffer should strike on the flat

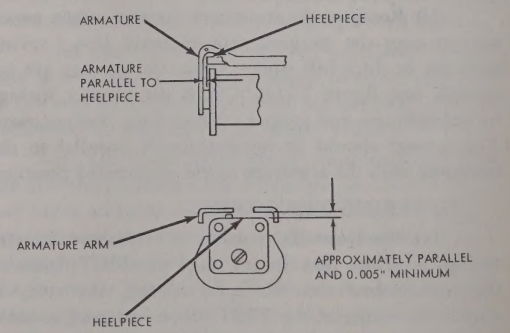

Figure 7—124. Class S Relay Armature Adjustments

portion of the armature which extends over the heelpiece.

Note

In the case of double arm armatures, the armature arm shall not be bent out excessively to meet this requirement.

(2) ARMATURE TRAVEL (STROKE).—The armature travel (stroke), when specified in the relay adjustment table, is checked by placing the specified gauge, held parallel to the armature, between the armature and coil core with the gauge completely overlapping the core. There must be perceptible clearance between the armature arm and the welded disk in the heelpiece. For inspection, gauge tolerance of plus 0.002-inch and minus 0.001-inch shall be allowed unless otherwise specified (see figure 7-125).

Note

Under normal operating conditions there is no need for readjustment. If readjustment is necessary, it may be accomplished by bending the armature arm. Care should be taken so that after adjustment, the armature arm does not bind on the heelpiece and that the portion of the armature arm that is formed over the heelpiece is still parallel to the heelpiece and rests on the associated residual in the heelpiece with with the relay de-energized.

(3) SPRING GAUGING.—The values of spring gauging shown in the relay adjustment table establish the correct sequence of make or break of relay contacts. Relays must meet the specified values, within tolerances. If the spring adjustment is within TEST limits, no adjustment is necessary. Spring bushings and contacts will wear when subjected to heavy duty service and so readjustments may be necessary occasionally. Check the spring gauging for each contact spring in the relay contact assembly. Make or break contacts should just make or break with the gauge of the value called for inserted between the armature and the core with the armature operated. The gauge is held parallel to the armature and completely overlapping the coil core. Refer to paragraph 7.*c*.(4)(*b*) for example of spring gauging. Readjust the stationary contacts, when necessary, to meet the gauging requirements. Use spring adjuster, or duck-bill pliers when the springs are accessible. Contacts should make or break within allowance tolerances.

(*a*) Make contacts should not make with the plus tolerances, and should make with the minus tolerances: break contacts should not break with the plus tolerances and should break with the minus tolerances.

(*b*) For inspection, tolerances of plus or minus 0.002-inch are permissible unless otherwise specified.

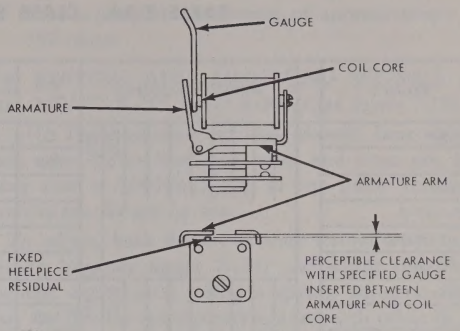

Figure 7—125. Class S Relay Armature Travel

For adjustment, tolerances of plus or minus 0.001-inch are permissible.

(*c*) Variation in the mechanical gauging shall not be permitted which will allow the contact gap between the make contacts to be less than 0.005-inch as judged visually when the relay is not operated.

(*d*) When a double armature relay has only make spring combinations in the right and left spring pile-ups, the total tension when the relay is not operated in the right spring pile-up shall exceed that of the total tension in the left spring pile-up by a minimum of 15 grams (see figure 7-123).

(*e*) The total tension in the left spring pile-up shall not be less than an average of 10 grams per armature spring.

(*f*) The tension of any armature or make spring shall be measured at the tip of the spring.

(4) SPRING TENSIONING.

(*a*) Readjust the tension of armature springs of relays that do not meet the TEST limits in the current-flow test. If upon testing, the relay is within the range of the TEST values, no readjustment is necessary. But, any relay whose operating range is outside of the TEST values should then be readjusted within READJUSTMENT limits. If the relay operates on the non-operate test, increase the armature contact spring tension. Do not put too much tension in the springs, or the relay will not operate on the operate test. The tension adjustment may change the spring gauging. Recheck the spring gauging, then test for operate and non-operate requirements with the current-flow test.

(*b*) If the relay failed to operate on the operate test, or when too much tension is put in the armature springs during adjustment, bend the armature springs slightly away from the heelpiece to reduce the tension.

(5) Relays must fully operate all contact springs and the armature must touch the magnet core on the OPERATE tests shown on the relay adjustment sheet.

TABLE 7-24. CLASS S RELAY ADJUSTMENT VALUES

RELAYS	SPRING GAUGING	TEST FOR	RESISTANCE		CURRENT		SEE NOTE	TESTING INSTRUCTIONS
			READJ.	TEST	READJ.	TEST		
K-104	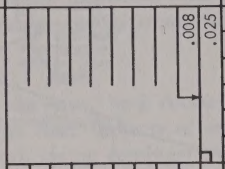	O	2450	1930	.0110	.0116	9	POS. to connector pin No. 8. NEG. to connector pin No. 1.
		NO	3500	4020	.0099	.0095		
128617								
PP-937-2								
H-870146-3								
8000 ohm								
Class S	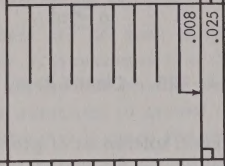	O						
		NO						
Double Armature Relay								
	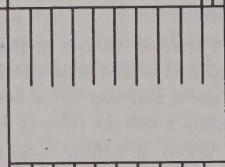	O						
		NO						
	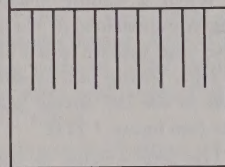	O						
		NO						
	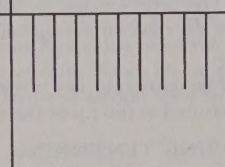	O						
		NO						
	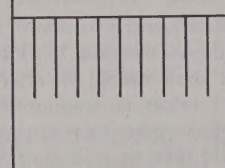	O						
		NO						

EXPLANATION OF TERMS
O - Operate, NO-Nonoperate.
TEST values are for inspection only.
READJ. values are for readjusting only.
Current is shown in amperes. Resistance values are for 115-volt ±1 volt battery.
POS. - Positive OUT TEST terminal of current flow test set.
NEG. - Negative OUT TEST terminal of current flow test set.

NOTES
9 - Equalize armature tension.

(*a*) Relays should not open any break (back) contact circuits or close any make contact circuits on the NON-OPERATE tests shown on the relay adjustment sheet.

(*b*) Contact spring tension will be inspected in accordance with the TEST values given on the relay adjustment sheet, and readjusted in accordance with the READJ. values.

(6) Before testing or adjusting relays, apply a saturating current to the relay for at least one second. The saturating current flow must be in the same direction as the normal current flow. Do not apply test current to the coil until one second after the saturation period.

Note

When adjusting and testing, the requirement may be met by applying 115 volts in series with a protective resistance of approximately 150 ohms.

e. TESTING AND ADJUSTING WE280BA RELAYS K-105 AND K-206. *(See figure 7-126.)*

(1) The armature springs should bear against each other on at least one point and must not have more than a 0.002-inch gap at any point across the front edges. Gauge by eye.

To adjust, back off the contact screws with an adjusting key (see figure 7-127) and adjust tips of the springs, as required, using a spring adjuster. Check that the flexible springs rest against each other in line with the armature with a pressure of 20 to 50 grams measured on one spring at the contact, with the other spring held so that it cannot follow its mate. Use a gram gauge to measure the tension and hold the other

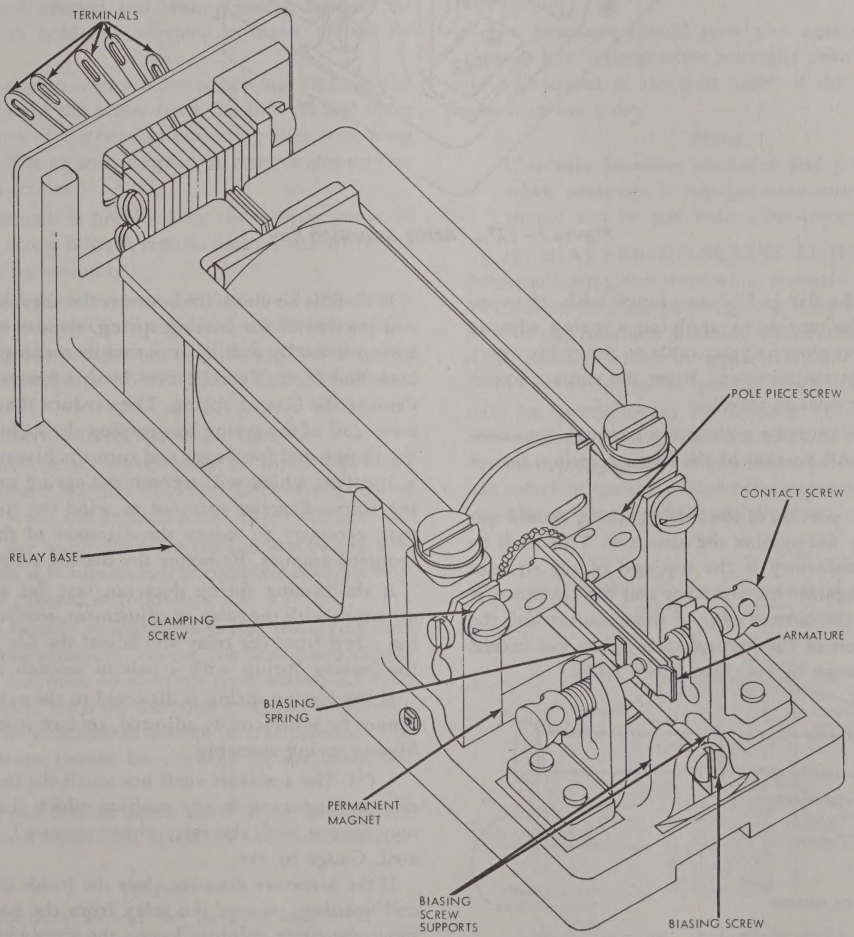

Figure 7—126. Parts of Relays K-105 and K-206

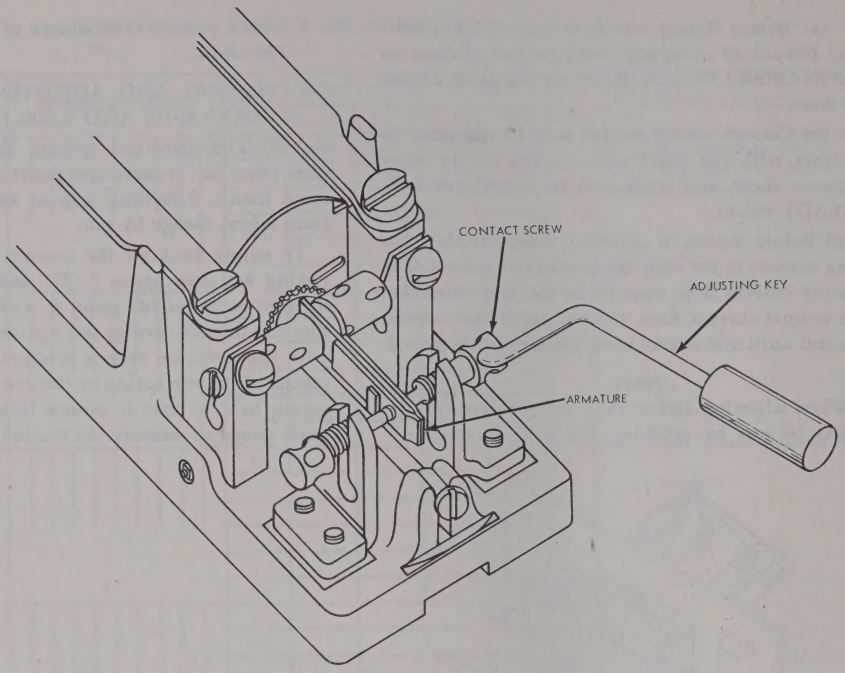

Figure 7—127. Relay Adjusting Key

spring with the flat end of an orange stick. If necessary, adjust the tension by applying a spring adjuster to the spring as close as practicable to the point where it is jointed to the armature. Reset the contact screws and adjust for contact travel.

(2) There must be a clearance between the armature and the coil portion of the biasing spring. Gauge by eye.

The straight portion of the biasing spring should rest approximately flat against the armature. This shall be considered satisfactory if the top end of the straight portion rests against the armature and the clearance, if any, between the bottom edge of the armature and the straight portion of the biasing spring does not exceed 0.020 inch. Gauge by eye. (See figure 7-128.)

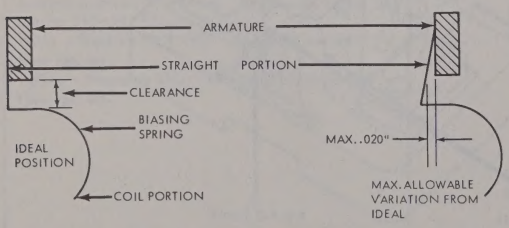

Figure 7—128. Bias Spring Clearance Adjustment

If there is no clearance between the armature and the coil portion of the biasing spring, remove the biasing spring screw by pulling it out while turning it slightly back and forth. Exercise care in this operation not to damage the biasing spring. Then reduce the size of the outer coil of the spring by grasping the spring between the thumb and forefinger and turn the biasing screw in a direction which will tighten the spring on the biasing screw. Exercise care not to wind the spring more than necessary to reduce the diameter of the coil the required amount. Remount the biasing screw.

If the biasing spring does not rest flat against the armature with the relay in adjustment, remove the biasing screw from the relay and adjust the flat portion of the biasing spring with a pair of smooth jaw pliers.

If the biasing spring is distorted to the extent that it cannot be satisfactorily adjusted, replace it with a new biasing spring assembly.

(3) The armature shall not touch the inside of the relay coil opening in any position which the armature may assume with the relay either operated or unoperated. Gauge by eye.

If the armature does not clear the inside of the relay coil opening, remove the relay from the base and remove the cover. Slightly loosen the screws holding the armature to its support. Then move the armature up

or down as required to bring it into an approximate central position with respect to the coil, noting that the contacts are in alignment.

(4) Contacts must line up so that the point of contact falls wholly within the boundary of the opposing contact. Gauge by eye.

To align the contacts from front to rear proceed as in 7.*e.*(3), shifting the armature in or out as required. If satisfactory alignment cannot be obtained in this manner, loosen the screws holding the contact screw brackets to the base of the relay and then move the brackets until the contacts line up properly. It is desirable to set the contact screw brackets so that the contact screws strike the contacts on the armature as near the center as possible. Tighten the screws securely and remount the relay.

(5) Contact and biasing screws shall be sufficiently tight in their bracket and biasing spring support respectively, to hold any adjusted position. Gauge by feel.

If the contact screws are not sufficiently tight in the bracket, remove the screw from the bracket and force the two parts of the bracket closer together with long nose pliers. Use an adjusting key to remove and replace the contact screws.

No adjustment is provided for the biasing screw. If the biasing screw is loose, remove and replace with new biasing spring assembly.

(6) Pole piece screws shall be held sufficiently tight in the pole pieces by the clamping screws to hold them in any adjusted position and still permit the pole piece screws to be turned. Gauge by feel. Use the adjusting key.

Tighten the clamping screws as required.

(7) The contact travel shall be minimum 0.004 inch, maximum 0.006 inch. The thickness gauge is applied between the armature and either contact.

Remove any build-ups from the contacts before proceeding with this adjustment. If complete readjustment is necessary proceed as follows:

Turn the biasing spring screw so that the spring does not touch the armature. Loosen the pole piece clamping screws and back off the pole piece screws AS FAR AS POSSIBLE. Back off the contact screws sufficiently to permit the armature to assume its free position. The relay armature should be centered in the relay coil opening.

Advance one contact screw until it just touches the armature, and then back it off ½ the specified contact travel.

Note

The contacts should be in line and meet squarely. Contact screws should be clamped securely.

One twelfth (1/12) of a turn of the contact screw (approximately the distance between the hole centers in the head of the contact screw) corresponds to approximately a 0.002-inch change in contact travel. Repeat this operation with the other contact screw. Check that the armature does not make contact with either contact screw but stands approximately midway between contact points. Check with the proper gauges that the contact travel, measured at the contacts, is within the specified limits.

(8) With the armature against the right-hand contact screw, turn the right-hand pole piece screw in until there is 0.004-inch space between the pole piece and the armature.

With the armature against the left-hand contact screw, turn the left-hand pole piece screw in until there is 0.004-inch space between the pole piece and the armature.

The armature should now stay against either the right or left contacts when manually positioned. Refine the adjustment of the pole pieces if the above condition does not exist.

Note

Clearance between armature and pole piece when armature is against associated contact should not be less than 0.004-inch.

(9) BIAS SPRING-SCREW ADJUSTMENT.— Before adjusting the bias spring, normal operating current should be passed through the relay in a direction to give the tongue a marking bias (armature against right contact screw in figure 7-129). This current should be permitted to pass through the coil of the relay for approximately five seconds. The tongue of the relay will then rest against the marking contact. Turn the bias spring screw clockwise until the spring has just sufficient tension to move the armature to the spacing contact plus an additional ⅛ turn.

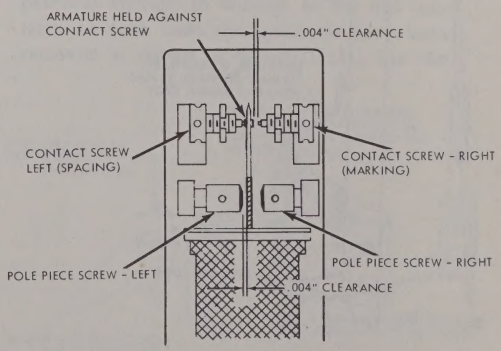
ARMATURE HELD AGAINST CONTACT SCREW
.004" CLEARANCE
CONTACT SCREW LEFT (SPACING)
CONTACT SCREW - RIGHT (MARKING)
POLE PIECE SCREW - LEFT
POLE PIECE SCREW - RIGHT
.004" CLEARANCE

Figure 7—129. Pole Piece and Contact Screw Adjustment

8. REMOVAL AND REPAIR.

a. GENERAL.—Procedures described in the following paragraphs outline the steps necessary to completely disassemble and reassemble each unit of the equipment. Disassembly procedures should be followed only as far as is necessary to perform the desired removal. Reassemble all parts, sub-assemblies, and units in accordance with the following:

(1) Replace all worn or broken parts that are causing malfunctioning of the unit, and adjust in accordance with the related adjustment data.

(2) Replace any worn parts that have not caused trouble, but that may cause trouble in the near future.

(3) Assemble replaced parts and associated parts firmly. Carefully tighten all fasteners, screws, nuts, and bolts.

(4) Readjust all parts disturbed or replaced during repairs.

(5) When dented or flattened areas prevent proper turning or adjusting, remove the damaged part and repair or replace.

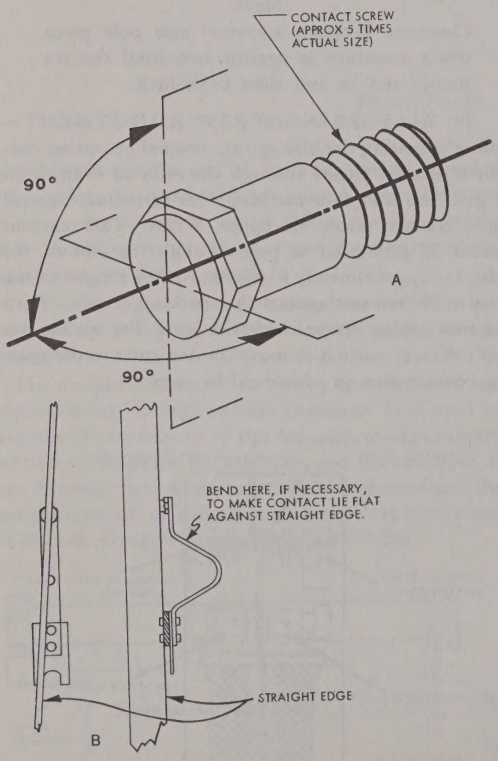

Figure 7—130. Alignment of New Governor Contact Points

(6) Bent or distorted parts may be restored to shape and reused, providing no cracks result from straightening and that hardened surfaces have not been softened by repairs.

(7) If the locking edges of lockwashers are rounded, replace.

(8) Replace screws or nuts which have damaged heads.

(9) Remove slivers or sharp burrs.

b. DISASSEMBLY.

(1) DISASSEMBLY OF GOVERNED MOTOR FOR REPAIRS.—The following procedure outlines the steps necessary to disassemble the motor for repairs.

(*a*) Remove the motor from the unit.

(*b*) Remove the pinion drive gear.

(*c*) Remove the resistor and bracket by removing the two H-660 attaching screws (see figure 7-151.) If resistor or capacitor requires replacing, unsolder leads and remove from bracket.

(*d*) Remove the governor brush and speed adjusting bracket together with the filter assembly by removing the two (H-627 or H-693) attaching screws (see figure 7-150). If repair or replacement of the contact brushes or filter components is required, unsolder the leads and remove.

(*e*) Remove the governor assembly from the motor shaft by removing the H-650 attaching screw (see figure 7-150). Be careful not to lose the O-623 shims between the motor and governor.

(*f*) Remove the motor from the motor plate by removing the four H-1277 mounting screws (see figure 7-155).

(*g*) Remove the E-604 brush-holder caps and E-603 brushes (see figure 7-149).

(*h*) When removing brushes, note or mark the position so the brush may be replaced in the same holder and with the same side uppermost.

(*i*) Remove the H-620 and H-623 nuts from the H-614 through-bolts and remove the A-604 end shield by prying gently with a screwdriver at the slot provided; remove the E-608 armature assembly.

(*j*) Remove the O-609 and O-610 bearings using a bearing puller.

CAUTION

Make sure the puller is positioned against the bearing inner race only. Pressure exerted on the dust shield will crush the shield and ruin the bearing. Do not attempt to pry the bearing off with a screwdriver.

(*k*) Clean all dust, paper lint, non-oily dirt, etc., from the stator and armature windings by brushing carefully with a clean, dry, sash brush.

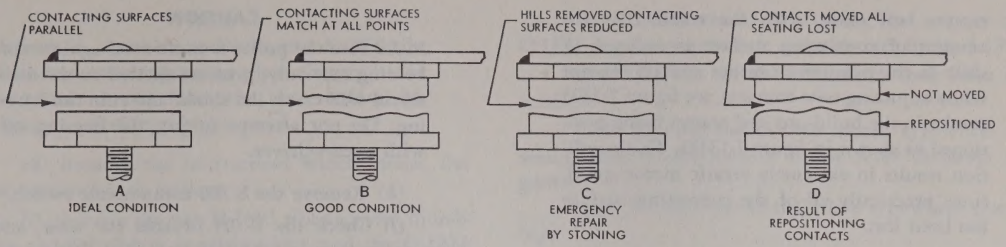

Figure 7—131. Enlarged Diagrams of Governor Contact Surfaces

CAUTION

Be careful not to damage the windings.

(*l*) Clean all oil, grease, or gummy deposits from the face of the armature and stator by wiping with a piece of clean cheesecloth that has been dampened with dry-cleaning solvent.

(*m*) Clean the end bells, bearings, motor pinion, and all other metal parts by immersing them in a container of appropriate cleaning fluid. Use a brush to remove dirt, grease, or gummy deposits.

(*n*) Clean all dirt, dust, oil, grease, gummy deposits, or other foreign material from the commutator by wiping with a piece of clean cloth.

Note

Discoloration of the commutator segments, caused by carbon particles becoming imbedded in the face of the segments, should not be removed unless the commutator must be refinished because it is badly grooved or if the brushes spark excessively.

(*o*) Remove the three H-637 retaining screws in the front of the governor and remove the O-611 target and O-613 cover (see figure 7-150).

(*p*) Remove the two H-641 retaining screws from the back of the governor, and remove the O-619 block together with the E-629 contact spring and contact, being careful not to lose the small spring post out of the contact spring.

(*q*) Remove the E-629 contact spring from the O-619 block by removing the H-645 attaching screw.

(*r*) Remove the two H-651 retaining screws from the O-620 screw contact block, and remove block and E-621 screw contact point.

(*s*) Remove the screw contact point by removing the H-654 nut and H-655 lockwasher.

(*t*) When a contact requires replacement, replace both the upper and lower contact points at the same time. This procedure tends to eliminate difficulties in seating the contacts.

(*u*) The new contact point on the screw is properly aligned when the contacting surface is perpendicular to a line through the center of the contact screw (see figure 7-130A). The new contact point on the contact spring is properly aligned when there is no appreciable gap between any part of the contacting surface of a new point and a straight edge, when checked in the manner shown in figure 7-130B.

(*v*) For emergency operation when trouble is due to build-ups and new contact points are not available, remove both contacts and lightly dress them with a fine carborundum stone. A large build-up may have to be knocked off with a screwdriver and then dressed with a burnishing tool. Both contacts should be replaced by new contacts as soon as possible. This is necessary to avoid more trouble from build-ups and pitting, which form quickly on resurfaced contacts.

Note

The surfaces of governor contacts may be covered with very small build-ups and craters, and the governors still operate satisfactorily. Figure 7-131B shows an enlarged view of small build-ups on one contact that match the craters on the opposite point, thus giving the maximum of contacting surfaces. Contacts in this condition need not be replaced unless trouble is experienced in securing and maintaining the proper speed adjustment. Trouble due to poor surface condition is frequently the result of a previous attempt to burnish or file old contacts. In such cases the build-ups have been removed as shown in figure 7-131C, but the

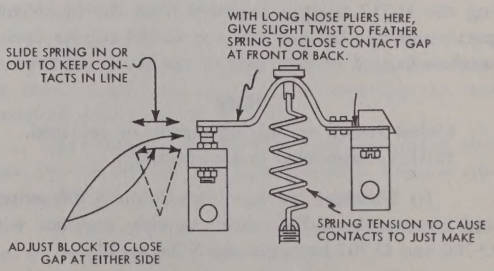
WITH LONG NOSE PLIERS HERE, GIVE SLIGHT TWIST TO FEATHER SPRING TO CLOSE CONTACT GAP AT FRONT OR BACK.
SLIDE SPRING IN OR OUT TO KEEP CONTACTS IN LINE
SPRING TENSION TO CAUSE CONTACTS TO JUST MAKE
ADJUST BLOCK TO CLOSE GAP AT EITHER SIDE

Figure 7—132. Positioning Governor Contacts

craters still exist, with the result that the amount of contacting surface is reduced. A shift in the position of either contact (except while adjusting new contacts, see figure 7-132) results in the build-ups and craters being positioned as shown in figure 7-131D. This condition results in extremely erratic motor speed, since practically all of the contacting surface has been lost.

CAUTION

Always replace governor contacts in pairs. Do not touch the contacting surfaces with the fingers, as even minute particles of moisture or dirt will cause arcing or pitting.

(2) DISASSEMBLY OF SYNCHRONOUS MOTOR FOR MAJOR REPAIRS. The following procedure outlines the steps necessary to completely disassemble the synchronous motor.

(*a*) Disconnect the two wire leads from the motor at the terminal block assembly.

(*b*) Remove the four H-1276 motor mounting screws and washers, and remove the motor (see figure 7-155).

(*c*) Remove the B-700 fan by removing the H-711 attaching screws and H-712 washers (see figure 7-153).

(*d*) Mark the frame and end shields of the motor so that the end shields can be assembled in their original position.

(*e*) Remove the two H-728 through-bolts and remove the A-704 end shield by prying gently between the shield and frame with a screwdriver.

Note

Do not lose the H-720 washer located between the O-707 bearing and O-706 spring.

(*f*) Remove the two H-713 screws from the A-701 end shield and remove the end shield.

(*g*) Unhook the ends of the O-704 spring and remove it from around the brush holders.

(*h*) Remove the E-704 brush holders by removing the H-717 hairpin retainers from the brush support assembly. Do not lose the H-718 copper spring washers located on each side of the brush holders.

Note

Unless switch or bearings are to be replaced, further disassembly is not necessary.

(*i*) Unsolder the two leads at the S-700 switch, and remove the E-701 rotor assembly together with O-700 and O-707 bearings and S-700 switch.

(*j*) Remove the bearings, using a standard bearing puller.

CAUTION

Make sure the puller is positioned against the bearing race only; pressure exerted on the dust shield will crush the shield and ruin the bearing. Do not attempt to pry the bearing off with a screwdriver.

(*k*) Remove the S-700 commutator switch.

(*l*) Check the E-704 brushes for wear, and replace any worn to a length shorter than 5/16 inch.

(*m*) Check the commutator switch for grooves and wear. Clean the commutator with #000 sandpaper, or replace.

(*n*) Check the bearings for wear. Replace loose or worn bearings.

(*o*) Check the rotor shaft for alignment. Replace rotors having bent shafts.

(*p*) Check the O-709 stator for continuity and grounds. Replace stators having shorted or grounded windings.

(*q*) Inspect the motor base for cracks or damage. Replace as needed.

(*r*) Inspect lead wires. Replace or repair if insulation or wires are damaged.

(*s*) Inspect the O-701 and O-705 felt washers in the end shields. Clean or replace as required.

(3) DISASSEMBLY OF THE TIME STAMP.— The following procedure outlines the steps necessary for a complete disassembly of the time stamp. To facilitate readjustment and alignment, do not remove more components than are necessary to repair the fault.

(*a*) Disconnect the power plug from its receptacle. Remove the cover attaching screw and the cover.

(*b*) Disconnect the wires from the filter at the TB-1800 terminal block (see figure 7-186).

(*c*) Remove the four nuts, lockwashers, and screws from the bottom of the base.

(*d*) Remove any of the filter components Z-1800, C-1801, or C-1802, or wires which require replacing; otherwise, further disassembly of the filter and base is not required.

(*e*) Disconnect the two motor lead wires at the TB-1800 terminal block.

(*f*) Remove the S-1800 switch by removing the H-1812 attaching screw and loosening the H-1820 mounting screw (see figure 7-183). Wires to the switch need not be removed unless the switch is to be repaired or replaced.

(*g*) Remove the O-1814 ribbon wind operating link (figure 7-140) by removing the H-1828 retaining spring clip (see figure 7-184).

Note

It may be necessary to loosen the A-1818 ribbon feed lever mounting plate (figure 7-186) and slide it out from the base, before the operating link can be removed.

(*h*) Remove the four screws which mount the upper mechanism to its base.

(*i*) Remove the two H-1805 ribbon spool thumb screws, O-1800 ribbon spool brackets, and the O-1824 ribbon (see figures 7-183 and 7-184).

(*j*) Remove the two H-1845 frame tiepost screws from the left side frame (see figure 7-184).

(*k*) Remove the attaching screw from the A-1816 long (rear) safety spring mounting bridge.

(*l*) Remove the H-1853 nuts and H-1850 stud from the A-1808 short (front) safety spring mounting bridge.

(*m*) Remove the H-1855 attaching screw from the A-1809 dial plate on the front of the unit (see figure 7-185).

(*n*) Remove the A-1810 lock lever anchor strip from the slot in the top of the frame.

(*o*) With the upper mechanism resting on its right side, remove the left side frame, being careful not to disturb any of the parts remaining attached to the right side frame assembly.

Note

It may be necessary to pry at various points along the left side frame assembly in order to remove it. However, do this with the utmost care, as excessive pressure against the type wheels, levers, etc., will cause damage and require additional repair.

(*p*) Unhook the O-1818 ribbon detent spring (see figure 7-184).

(*q*) Unhook the O-1815 ribbon shift toggle spring.

(*r*) Remove the H-1835 lock plate by removing the H-1836 attaching screw.

(*s*) Remove the O-1817 retaining spring reverse toggle.

(*t*) Remove the O-1812 ribbon feed retaining spring.

(*u*) Remove the O-1811 ribbon feed shift mechanism assembly.

(*v*) Remove the O-1820 ribbon wind ratchets.

(*w*) Remove the two O-1822 ribbon rollers.

(*x*) Remove the A-1810 lock lever anchor strip and O-1826 and O-1827 springs (see figure 7-185).

(*y*) Unhook the springs and remove the A-1806 long (rear) and A-1808 short (front) safety spring mounting bridges (see figure 7-184).

(*z*) Unhook the O-1845 spring and remove the O-1825 skip lever and shaft assembly (see figure 7-185).

(*aa*) Remove the O-1829 month lock lever assembly.

(*bb*) Remove the O-1846 month typewheel assembly and O-1836 month throw lever assembly together.

(*cc*) Remove the O-1847 date typewheel assembly.

Note

Unless the O-1861 segment assembly or O-1862 spring is to be replaced, do not disassemble the date wheel.

(*dd*) Remove the O-1830 date lock lever assembly.

(*ee*) Remove the H-1859 setscrew from the O-1842 minute drive gear assembly, and remove the O-1848 drive wheel, O-23 hour and minute typewheel assembly, and the O-1837 date throw lever assembly together.

(*ff*) Remove the O-1840 hour throw lever assembly.

(*gg*) Remove the O-1831 hour lock lever assembly.

(*hh*) Remove the O-1849 year wheel assembly.

(*ii*) Loosen the two H-1822 setscrews and remove the O-1808 drive ratchet assembly (see figure 7-183).

(*jj*) Loosen the setscrew in the H-1807 drive lever thrust collar and remove the collar.

(*kk*) Remove the H-1817 retaining screw and washers from the O-1806 ratchet lock lever and shaft assembly. Remove assembly.

(*ll*) Remove O-1810 ratchet drive assembly.

(*mm*) Remove the H-1810 screw and tie post.

(*nn*) Remove the two H-1865 nuts, the A-1813 bearing strap assembly, O-1852 minute cam, O-1851 minute cam assembly, and O-1850 drive bushing assembly (see figure 7-185).

(*oo*) Remove the H-1862 upper and H-1864 lower motor studs, O-1863 motor spacers, A-1812 motor tie strap, and B-1800 motor.

(*pp*) Remove the A-1818 ribbon feed ratchet mounting plate assembly and Z-1800 capacitor from the back of the printing shelf by removing the two attaching screws (see figure 7-186).

(*qq*) Remove the H-1889 retaining spring clip from the ribbon feed fork plate assembly. Remove ribbon feed lever and O-1856 ratchet assembly.

(*rr*) Remove the retaining screw from the bottom of the platen and remove platen.

(*ss*) Remove the two H-1885 retaining screws from the TB-1800 terminal block and the six retaining

screws from the bottom of the base. Remove the printing shelf together with the attached electrical components.

Note

Further disassembly will not be necessary except for replacement or repair.

(*tt*) Remove the four retaining screws in the top of the printing shelf. Remove the A-1815 magnet yoke and L-1800 print coil assembly.

(*uu*) The coil can be removed from the yoke by removing the three attaching screws.

Note

Screws are staked and should be restaked at assembly.

(*vv*) Remove the K-1800 remote control relay assembly by removing the two attaching screws.

(*ww*) Remove the S-1801 switch assembly by removing the two attaching screws.

(*xx*) Remove any wires on electrical components which require replacement by unsoldering.

(*yy*) Remove the fork plate assembly and the O-1860 knock-out operating arm assembly from the base by removing the H-1883 and H-1889 retaining spring clips and pivot pins.

(4) DISASSEMBLY OF REPERFORATORS.

(*a*) REMOVAL OF RANGEFINDER. *(See figure 7-166.)*

1. Remove the H-1121 and H-1128 screws that mount the rangefinder.

2. Lift the rangefinder off the mounting post on A-830.

(*b*) REMOVAL OF SELECTOR UNIT. *(See figure 7-167.)*

1. Remove the rangefinder as described above.

2. Remove the O-1116 armature spring and the O-1153 selector arm spring. With the H-1167 lock nut loosened, remove the armature lever upper pivot screw, H-1166. Lift the armature until the lower pivot clears the tip of its pivot screw and carefully withdraw the lever from the assembly.

3. Remove the two H-1173 screws that mount the A-833 selector magnet bracket to the selector assembly and remove the A-833 selector magnet bracket. Slide the L-800 magnet coils off the O-1157 spring retainer and O-1158 magnet core and move the L-800 coils to the side of the reperforator unit. This must be done as the selector magnet has soldered connections.

4. Remove the three H-1142 screws that mount the selector assembly on the reperforator unit frame. Move the O-1001 main shaft clutch throwout lever (figure 7-161) in a direction opposite to its spring pull in order to free the assembly. Carefully remove the selector assembly. Handle the selector assembly with care to avoid damaging the small parts.

(*c*) REMOVAL OF MAIN SHAFT. *(See figure 7-161.)*

1. Remove the rangefinder and selector assembly as outlined above.

2. On the receiver reperforator, remove the H-1183 screws that hold the tape feed-out mechanism (see figure 7-168) to the A-805 base plate.

3. Unhook the O-1190 punch arm spring (see figure 7-164) from the H-1298 punch arm spring post on the O-1075 punch arm.

4. Remove the H-1058 screw holding the O-1075 punch arm in position, and let the punch arm drop out of the way of the main shaft.

5. Unhook the O-1002 clutch throwout lever spring.

6. Remove the H-977 and the H-984 screws holding the O-1003 and O-1004 bearing retaining brackets, and remove the main shaft.

(*d*) REMOVAL OF PERFORATING MECHANISM. *(See figures 7-163 and 7-164.)*

1. Unhook the O-1190 punch arm spring from the H-1298 punch arm spring post on the O-1075 punch arm.

2. Remove the right ribbon spool cup by loosening the H-942 and H-950 setscrews (see figure 7-160), unscrewing the H-938 nut, and pulling the O-977 shaft out of the A-818 bracket from the front. Be careful not to lose the attaching hardware that comes loose when the shaft is removed.

3. Remove the four H-1094 screws (accessible from the underside of the base plate) holding the perforating mechanism to the base plate and remove the perforating mechanism by lifting up slightly and turning to the right.

(*e*) REMOVAL OF PUNCH BLOCK. *(See figures 7-163 and 7-165.)*

1. Loosen the two H-1022 screws holding the O-1070 ribbon guide and slide the ribbon guide out.

2. Remove the two H-1005 and the two H-1045 screws holding the punch block to the perforating mechanism and remove the punch block.

(*f*) REMOVAL OF TYPE BASKET. *(See figures 7-156, 7-157, and 7-158.)*

1. Unhook the O-912 code bar locking lever spring, the O-817 letters pull bar spring, and the O-818 space pull bar spring.

2. Unhook the O-1190 punch arm spring (see figure 7-164) and the O-802 signal bell hammer spring (see figure 7-155).

3. Remove the H-841, H-1243, and H-1247 type basket mounting screws.

4. Remove the H-923 nut (see figure 7-160), remove the H-925 screw and swing the left ribbon spool bracket so the ribbon spool cup will not interfere with the type basket.

5. Remove the vertical lever bracket as outlined above.

6. With the pull bars held out of engagement with the pull bar guide and slide the assembly upward, turning toward the left and out of the unit.

(*g*) REMOVAL OF RIBBON SPOOL BRACKET. *(See figure 7-160.)*

1. Unhook the O-912 spring from A-818 for the right ribbon spool bracket or unhook the O-817 and O-818 springs from A-817 for the left ribbon spool bracket.

2. Remove the O-960 and O-961 ribbon spool and ribbon from the shafts.

3. Remove the H-923 nut from the left ribbon spool bracket or remove the H-945 nut from the right ribbon spool bracket.

4. Remove the H-925 screw from the left ribbon spool bracket or remove the H-947 screw from the right ribbon spool bracket, and remove the left or right bracket.

(*h*) REMOVAL OF PLATEN MECHANISM. *(See figure 7-163.)*

1. Loosen the two H-1022 screws holding the O-1070 ribbon guide and slide the ribbon guide out.

2. Loosen H-1000 and H-998 setscrews.

3. Push the O-1038 shaft forward through the front of the casting just far enough to slide the platen off the rear of the shaft. Be careful not to lose the O-1044 shims.

(*i*) REMOVAL OF A TYPE BAR. *(See figures 7-156 and 7-157.)*

1. Remove the ribbon and ribbon guide as outlined above.

2. Remove the platen mechanism as outlined above.

3. To remove a type bar, pull it forward and down as far as it will go and lift its pivoted end from the type bar segment. In case it cannot readily be disengaged from the O-811 bearing rod, or if it is one of the type bars at the extreme end of the type bar segment, back off the H-838 retaining screw (not more than one full turn) in order to facilitate the removal of the type bar.

(*j*) REMOVAL OF CODE BARS. *(See figure 7-158.)*

1. Remove the two H-1235 screws fastening the O-923 code bar mounting plate to the reperforator frame.

2. Holding the code bars parallel, lift upward, disengaging the pull bars and T levers from the code bars. Be careful not to lose the shims that may stick to the underside of the O-923 code bar mounting plate when it is removed.

(*k*) REMOVAL OF SELECTOR LEVERS, SWORDS, AND T LEVERS. *(See figure 7-166.)*

1. Remove the rangefinder and armature as described above.

2. Remove the O-1116 locking lever spring, the O-1121 selector lever springs, and the O-1118 spring.

3. Remove the A-829 locking lever by removing the H-1098 nuts.

4. Remove the H-1101 nuts that clamp the separator plates together.

5. Remove the separator plates, swords, T levers, and selector levers.

(5) REMOVAL OF COMPONENTS FROM DISTRIBUTOR-TRANSMITTER BASE (NUMBERING). —The following procedure outlines the steps necessary to remove the components from the numbering base.

(*a*) COVERS. *(See figure 7-178.)*

1. Remove the A-1514, A-1515, A-1516, and A-1517 covers by removing the attaching screws H-1646, H-1649, and H-1651.

2. Remove the A-1510, A-1509, A-1513, and A-1512 covers by removing the attaching screws H-1621, H-1642, H-1618, H-1615, and H-1631.

3. Swing the A-1508 cover out away from the base and remove the H-1610 screws from the post.

(*b*) DOORS AND REWIND REELS. *(See figure 7-178.)*

1. The A-1518 doors can be removed by removing the H-1655 attaching screws. Retain the O-1552 shims with the doors.

2. The tape reels can be removed from the doors by removing the H-1653 nuts and the H-1664 and H-1698 screws.

(*c*) TAPE WINDING ASSEMBLY. *(See figure 7-177.)*

1. Remove the H-1638 screws from the right bearing plate and the H-1587 screws from the A-1506 left bearing plate (see figure 7-176).

2. The complete tape winding assembly can now be removed.

Note

It may be necessary to remove the H-1596 screw and to slide O-1541 gear away from the bearing mounting plate in order to gain access to the H-1587 screws.

(*d*) PIVOT ARM. *(See figure 7-175.)*

1. Remove the two H-1534 screws and the H-1536 collar.

2. Remove the O-1504 pivot arm and O-1508 sleeve.

3. Separate the sleeve and pivot arm by removing the H-1538 nut and H-1537 lock washer.

4. Remove the O-1506 tight tape arm by removing the H-1539 nut and H-1541 screw.

5. Remove the O-1511 stop pawl by removing the H-1539 nut and H-1548 screw.

(*e*) TAPE REEL. *(See figure 7-175.)*

1. Remove the H-1553 screw and remove the tape reel from the shaft.

2. Remove the H-1552 lock nut, H-1604 friction nut, O-1518 friction spring, O-1516 friction disk, and O-1515 felt washer from the O-1519 sleeve.

3. Remove the O-1519 sleeve and O-1512 felt washer from the reel.

(*f*) FEED PAWL AND RATCHET. *(See figure 7-175.)*

1. Remove the H-1556 washer and the O-1523 feed arm.

2. Remove the H-1559 screw and remove the O-1521 feed ratchet from the tape reel shaft.

(*g*) BEARING BRACKETS AND BEARINGS. *(See figure 7-176.)*

1. Remove the A-1506 bearing bracket from the tape reel shaft.

2. Remove the O-1520 bearing (see figure 7-175) from the bracket by removing the H-1584 lock nuts (see figure 7-176).

(*h*) MAIN SHAFT. *(See figure 7-176.)*—Remove the H-1578 and the H-1591 screws from the bearing blocks at each end of the O-1545 shaft and remove the shaft and gears.

Note

Retain the O-1535 and O-1547 shims and replace in their original position when reassembling.

(*i*) SLIP CONNECTIONS. *(See figure 7-174.)*

1. Remove the leads from the slip connector to be replaced.

2. Remove the two H-1512 screws and remove the slip connector bracket from the base.

3. Remove the two H-1500 screws and remove the slip connector from the A-1500 bracket.

(6) DISASSEMBLY OF MESSAGE BASE.—Figures 7-174 through 7-177 illustrate the message base. Removal of the components contained on this base will follow the same sequence as those outlined for the numbering base.

(7) DISASSEMBLY OF DISTRIBUTOR-TRANSMITTERS.

(*a*) REMOVAL OF CONTACT BRACKET. *(See figure 7-172.)*

1. Unhook the O-1353 tape-out operating lever spring and the O-1377 selector lever bail spring.

2. Remove the two H-1302 screws that fasten the A-1310 contact bracket to the bottom plate. Access to these screws is from the underside of the bottom plate. Swing the contact bracket assembly free, taking care not to put stress on the connecting wires.

(*b*) REMOVAL OF THE BOTTOM PLATE. *(See figure 7-170.)*

1. Unhook the O-1306 release bar spring, the O-1389 feed pawl spring, the O-1305 spring, and the two H-1432 screws holding the A-1315 filter bracket to the A-1314 bracket.

2. Remove the two H-1308 screws that secure the A-1302 support posts to the base plate.

3. Turn the unit bottom-side up and remove the four H-1301 screws that secure the A-1321 and A-1326 side frames to the bottom plate.

4. Carefully take top and bottom sections apart. All of the wiring will be located on the bottom section and most of the mechanical parts will be on the top section. Further disassembly may now be easily accomplished.

c. ASSEMBLY.

(1) REASSEMBLY OF GOVERNED MOTOR.—The following procedure can be followed for reassembly of the motor.

(*a*) ARMATURE AND BEARINGS. *(See figure 7-149.)*

1. If the O-609 or O-610 bearings have been removed, replace them on the E-608 armature.

Note

When replacing bearings, apply pressure to the inner race only. Pressure on the outer race will damage the bearing.

2. Place the armature in the A-601 housing and install the A-604 end shield. Make sure the O-608 spring and H-624 washer are in the end shield before installing.

3. Align the end shield with the two H-614 through-bolts and secure with the H-620 and H-623 nuts.

(*b*) BRUSHES. *(See figure 7-149.)*—Install the E-603 brushes in their original position and secure with the E-604 caps.

(*c*) RESISTOR AND CAPACITOR. *(See figure 7-151.)*—Attach the R-600 resistor and C-600 capacitor to the A-613 bracket and secure the bracket to the H-662 and H-675 mounting posts. Resolder any connections which may have been removed.

(*d*) FILTER ASSEMBLY.

1. Reassemble any components removed from the A-615 filter bracket and resolder any connections.

2. Place the A-616 plate clamp and A-615 filter bracket on the motor plate and secure with the H-627 or H-693 screws (see figure 7-150). Tighten the screws just enough to hold the screws in the plate.

(*e*) GOVERNOR. *(See figure 7-150.)*

Note

If the governor has been disassembled, reassemble as outlined below before installing it on the governed motor.

1. Secure the E-621 contact screw to the O-620 block and secure the block to A-611 shell with the two H-651 screws.

2. Secure the E-629 spring contact to the O-619 block with the H-645 screw and secure the block to the A-611 shell with the two H-641 screws.

Note

Hook the O-621 spring in the spring post in the spring contact before securing the block in the governor shell.

3. Replace the O-614 and O-615 contact springs and the O-612 contact disk in the O-613 cover, securing with the H-638 nut. Replace the cover and O-611 target, securing with the three H-637 screws.

4. Clean the contact disks with a cloth dampened in carbon tetrachloride. A smooth, even, gray coating of oxide is a desirable condition. Do not disturb the contact disks unless there is excessive sparking at the brushes.

5. Install the assembled governor on the shaft and secure with the H-650 screw.

Note

Install the original O-623 shims between the governor and motor.

(*f*) SPEED ADJUSTING BRACKET AND BRUSHES. *(See figure 7-150.)*

1. Reassemble any components removed from the A-608 speed adjusting bracket and resolder all connections.

2. Slide the A-608 bracket under the plate clamp (installed in paragraph (*c*)*3.* above) and position the bracket so that both E-609 and E-614 contact brushes are flush on the contact disks.

3. Hold the A-608 bracket in position and tighten the mounting screws. Connect the filter terminals to the motor brush holders.

4. Replace the motor drive pinion.

(*g*) INSPECTION.

CAUTION

Do not turn the motor backward (in a clockwise direction when viewed from governor end). Reversing the direction of rotation may cause jamming, or may break or otherwise damage the parts.

1. Check to be sure at least 5/16 inch of brush material remains.

2. Check to be sure the surface bearing on the commutator constitutes at least one-third of the brush face.

3. The brushes should make contact at least ¾ of the long dimension of the brush face.

4. If the above requirements are not met, substitute a new brush which has been properly surfaced.

5. Insert a new brush with the numbered side up.

6. See that the brush moves freely in the brush holder. Check the pressure of the brush springs and see that they meet specifications.

7. Check contact disks for pits or burned spots.

8. Check that the carbon brushes on the tips of the governor contact springs have a length of at least 1/16 inch. Replace the individual brushes when they are shorter than the required length.

9. After the governor is completely reassembled and adjusted, the new brushes are seated by running the motor on test for at least one hour. Check the speed every 15 minutes and immediately investigate any sudden change in motor speed.

10. If the motor speed is erratic and the trouble cannot be traced to other parts of the motor, disassemble the governor and recheck the contacts for build-ups and alignment. If build-ups are found, replace the contacts. After repair, reassemble and repeat the above run-in period of one hour.

11. The operation of the governor is satisfactory if the motor speed has not changed appreciably at the end of the test run.

(2) REASSEMBLY OF SYNCHRONOUS MOTOR.—The following procedure outlines the steps necessary to reassemble the synchronous motor.

(*a*) BEARINGS AND SWITCH. *(See figure 7-153.)*

Note

Lubricate bearings, and clean commutator switch with #0000 sandpaper. Do not use

emery cloth or carborundum paper. If switch is badly grooved, replace.

1. Place the S-700 switch on the E-701 rotor assembly and install the H-716 and H-721 washers and the O-700 and O-707 bearings (dust shield nearest the rotor). Press the bearings onto the shaft.

2. Place the E-701 rotor assembly into the O-709 stator and resolder the two leads to the commutator switch.

3. If removed, replace the O-701 and O-705 felt washers in the end shields. Install the A-701 end shield and the two H-713 screws.

4. Place the H-719 washer, O-706 spring, and H-720 washer in the A-704 end shield and install the shield on the stator.

5. Install the two H-728 clamping screws and secure with the H-715 nuts.

6. Install the B-700 fan and drive pinion.

(3) REASSEMBLY OF TIME STAMP MX-1527/U.—The following procedure outlines the steps necessary to reassemble the time stamp.

(*a*) Replace the two O-1820 ribbon wind ratchets (see figure 7-184).

(*b*) Hook the O-1815 ribbon shift toggle spring to the O-1816 plate.

(*c*) Replace the O-1811 ribbon feed shift mechanism assembly.

(*d*) Replace the O-1812 ribbon feed retaining spring.

(*e*) Replace the O-1817 retainer spring reverse toggle.

(*f*) Replace the H-1835 ribbon feed spring carriage lock plate and secure with the H-1836 attaching screw.

(*g*) Replace the O-1818 ribbon detent spring and hook up the O-1815 ribbon shift toggle spring.

(*h*) Place the A-1812 tie strap on the B-1800 motor and install motor onto frame (see figure 7-185).

(*i*) Place the H-1861 spacers between the motor mounting posts and frame (rounded end toward frame) and secure the motor with the H-1862 and H-1864 studs.

Note

Make sure the brass spacers are on the studs and the long stud is positioned at the bottom of the frame.

(*j*) Place the O-1852 nylon minute cam, O-1851 minute cam assembly, and O-1850 drive bushing assembly on the A-1813 bearing strap assembly.

(*k*) Install the bearing strap, lining up the motor drive shaft and O-1850 bushing. Secure the strap with the two H-1865 attaching nuts.

(*l*) Install the frame tie post and H-1810 screw (see figure 7-183).

(*m*) Install the O-1844 shaft and cam assembly (see figure 7-185) into the frame. Install the O-1808 ratchet drive assembly onto the shaft (see figure 7-183).

(*n*) Install the O-1806 ratchet lock lever and shaft assembly. Secure the H-1807 drive lever thrust collar on the shaft.

Note

Make sure the hole in the O-1806 lever is placed over the lever on the O-1810 drive ratchet assembly. Secure with the H-1817 screw, washer, and spacer.

(*o*) Hook the O-1802 drive ratchet spring to the spring post.

(*p*) Install the O-1808 drive ratchet assembly. Tighten the two H-1822 setscrews.

(*q*) Install the O-1849 year wheel assembly shaft into the frame (see figure 7-185).

(*r*) Install the O-1831 hour lock lever assembly.

(*s*) Install the O-1840 hour throw lever assembly. Make sure the arm is on the hour change cam.

(*t*) Install the arm on the O-1837 date throw lever assembly between the O-1843 minute typewheel and O-1801 spacing wheel assembly (a slot is provided in the spacing wheel). Mesh the minute O-1842 drive wheel assembly with the O-1843 minute typewheel assembly. Holding the three parts in their relative position, install each on its shaft. By careful maneuvering of each part, they can be installed on their shaft simultaneously.

(*u*) Install the O-1830 date lock lever assembly.

(*v*) Install the O-1847 date typewheel assembly.

(*w*) Install the O-1836 month throw lever assembly and O-1846 typewheel.

(*x*) Install the O-1825 skip lever shaft assembly.

(*y*) Install the O-1829 month lock lever assembly.

(*z*) Install O-1835 ribbon rollers in frame.

(*aa*) Install the left side frame assembly and secure to the frame tie posts with the H-1829 and H-1845 attaching screws (see figure 7-184).

(*bb*) Install the A-1806 long (rear) safety spring mounting bridge and secure with the two H-1838 attaching screws. Hook the throw lever springs to their respective lever.

(*cc*) Install the A-1810 lock lever anchor strip and O-1826 and O-1827 springs (see figure 7-185). Hook the springs to their respective lock lever.

(*dd*) Install the A-1809 dial plate and secure with the two H-1855 attaching screws.

(*ee*) Install upper mechanism and secure with the four mounting bolts.

(*ff*) Install the fork plate assembly and O-1860 knock-out operating arm assembly on the base (see figure 7-186). Secure with the pins and H-1883 and H-1889 spring clips.

(*gg*) Slip the E-1801 solenoid plug assembly in the fork plate assembly.

(*hh*) Replace any electrical components or wires removed from the printing shelf, and secure properly.

(*ii*) Install the printing shelf on the base plate. Secure with the six attaching screws.

(*jj*) Secure the TB-1800 terminal block to the base plate with the two H-1885 attaching screws.

(*kk*) Replace the MS-1800 cork in the O-1853 platen and install platen.

Note

When replacing cork pad, remove all of the old cork and cement the new one in place. Trim portions of the cork along the printing line if the registration shows ragged edges or extra characters are printed.

(*ll*) Replace the A-1818 ribbon ratchet mounting plate assembly, Z-1800 filter, and secure with the two retaining screws.

(*mm*) Connect the ribbon feed lever to the ribbon feed fork plate assembly and secure with the spring clip.

(*nn*) Install the O-1814 ribbon wind operating link (see figure 7-184). Make sure the ratchet mounting plate is adjusted so the operating link will not bind against the printing shelf casting.

(*oo*) Install the typehead and secure with four mounting screws. Make sure the S-1800 switch is positioned correctly under the corner mounting screw (see figure 7-183). The switch must open and close as it goes in and out of the detent in the nylon minute cam.

(*pp*) Connect the O-1814 link to the ribbon feed shift assembly and secure with the H-1828 spring clip (see figure 7-184).

(*qq*) Connect the motor leads to the terminal block. Replace any filter components that may have been removed.

(*rr*) Check the operation of the unit and replace cover.

(4) REASSEMBLY OF THE REPERFORATORS.

(*a*) In general, all parts of the reperforators are reassembled in the reverse order in which they were disassembled. If the parts have been cleaned and the surfaces are free from oil, relubricate them as they are reassembled. Give particular attention to all parts which are not easily accessible after the reassembling is completed.

(*b*) Any adjustments which have been altered in the process of disassembling, cleaning, repair, replacement, or reassembly of the parts must be completely readjusted according to the instructions in paragraph 6 of this section.

(5) REASSEMBLY OF DISTRIBUTOR-TRANSMITTER BASE (NUMBERING).

(*a*) In general, all parts of the bases are reassembled in the reverse order in which they were disassembled. If the parts have been cleaned and the surfaces are free from oil, relubricate them as they are reassembled. Give particular attention to all parts which are not easily accessible after the reassembling is completed.

(*b*) Any adjustments which have been altered in the process of disassembling, cleaning, repair, replacement, or reassembly of the parts must be completely readjusted according to the instructions in paragraph 6 of this section.

(6) REASSEMBLY OF MESSAGE BASE.—Figures 7-174 through 7-177 illustrate the mesage base. Reassembly if the components contained on this assembly will follow the same sequence as for the numbering base.

(7) REASSEMBLY OF THE DISTRIBUTOR-TRANSMITTERS.

(*a*) In general, all parts of the distributor-transmitter are reassembled in the reverse order in which they are disassembled. If the parts have been cleaned and the surfaces are free from oil, relubricate them as they are reassembled. Give particular attention to all parts which are not easily accessible after the reassembling is completed.

(*b*) Any adjustments which have been altered in the process of disassembling, cleaning, repair, replacement, or reassembly of the parts must be completely readjusted according to the related instructions in paragraph 6 of this section.

d. COMPONENT IDENTIFICATION AND EXPLODED VIEWS.

(1) Figures 7-133 to 7-137, inclusive, show the electrical components of the receiver and transmitter relay groups. All components within the relay groups are easily accessible and may be removed by unsoldering the leads connecting it to the component and then removing the bracket or screw holding it to the relay group.

(2) The exploded views (figures 7-138 to 7-145, inclusive) show the component parts of the monitor cabinet, the monitor reperforator tape container, and the reeling machine.

(3) Figures 7-146 to 7-148 show the components of Power Supply PP-987/U. All components in the power supply are easily removable from their mountings.

TABLE 7-25. WINDING DATA

DESIGNATION SYMBOL	TELETYPE PART NO.	DIAGRAM	WINDING	WIRE SIZE	NO. OF TURNS	DC RESISTANCE IN OHMS	HIPOT A-C VOLTS	REMARKS
K-101	129398		SINGLE	#39	14,300	2000	1000	CLASS B, SLOW RELEASE RELAY
K-102	128616		SINGLE	#39	14,300	2000	1000	CLASS B, SLOW RELEASE RELAY
K-103 K-208	128612		SINGLE	#39	17,500	2500	1000	CLASS B, SLOW RELEASE
K-104	128617		SINGLE	#43	32,000	8000	1000	CLASS S, FAST ACTING
K-106 K-201	RY-30		DOUBLE (BIAS AND OPERATING)			136 136		LINE RELAY
K-202	128614		1 non-ind.	#38	515	4000	1000	CLASS B, FAST ACTING
			1 IND.	#38	16,500	2000	1000	
			2	#41	19,500	4000	1000	
K-203	128615		SINGLE	#38	28,500	3300	1000	CLASS B, FAST ACTING, DOUBLE ARMATURE
K-204 K-205 K-210	128613		SINGLE	#39	17,500	2500	1000	CLASS B, SLOW RELEASE, DOUBLE
K-207 K-209	128611		SINGLE	#38	28,500	3300	1000	CLASS B, FAST ACTING, DOUBLE ARMATURE
K-105 K-206	124915		SINGLE			5		POLAR RELAY
T-501			PRIMARY	#15	116		1500	
			SECONDARY #1	#16	190			
			SECONDARY #2	#27	264			
L-501			SINGLE	#19	504	3.31	1500	

(4) The exploded views (figures 7-149 to 7-193) show the component parts of the governor and synchronous motors, reperforators, distributor-transmitters, mounting bases, time stamp, receiver cabinet, and the transmitter cabinet.

e. WIRING AND SCHEMATIC DIAGRAMS.

Figures 7-194 to 7-211 inclusive, are the actual wiring diagrams of the Receiver, Transmitter, and Monitor Cabinets; the control panels; the power supply; the reeling machine, the time stamp, the Reperforators, Distributor-Transmitters, and the Bases. Figures 7-203 to 7-206 are the Schematic Diagrams of the Receiver, Transmitter, and Monitor Groups, and the Power Supply. Figure 7-212 is the Interconnecting Diagram.

NO.	NOTES
1.	WIRE COLOR CODE: (WIRES MAY BE SOLID COLOR OR TRACER IN WHITE WIRE.) O ORANGE — BK-W BLACK-WHITE BL BLUE — BL-O BLUE-ORANGE W WHITE — R-G RED-GREEN BR BROWN — R-O RED-ORANGE G GREEN R RED BK BLACK S SLATE ALL BLUE WIRE IS NEGATIVE BATTERY. ALL RED WIRE IS POSITIVE BATTERY (GROUND).

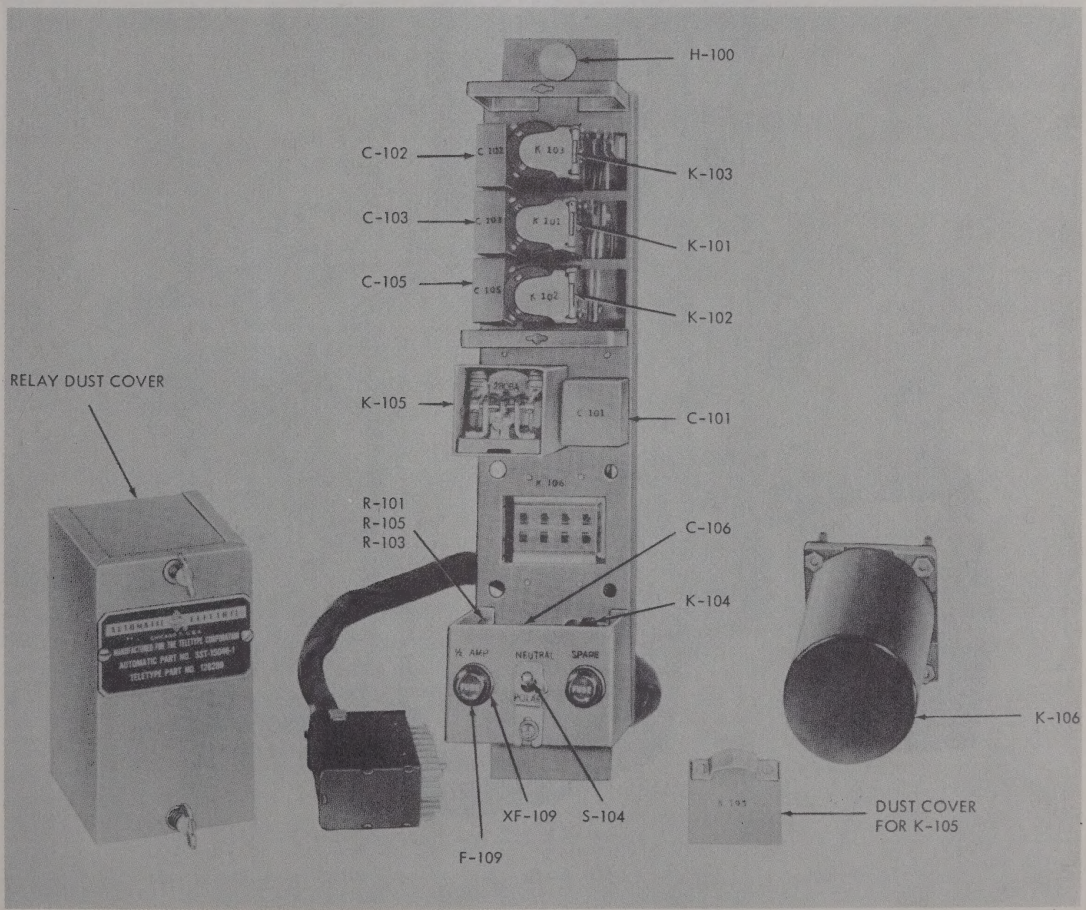

Figure 7—133. Control Panel SB-357/FGC, Front View

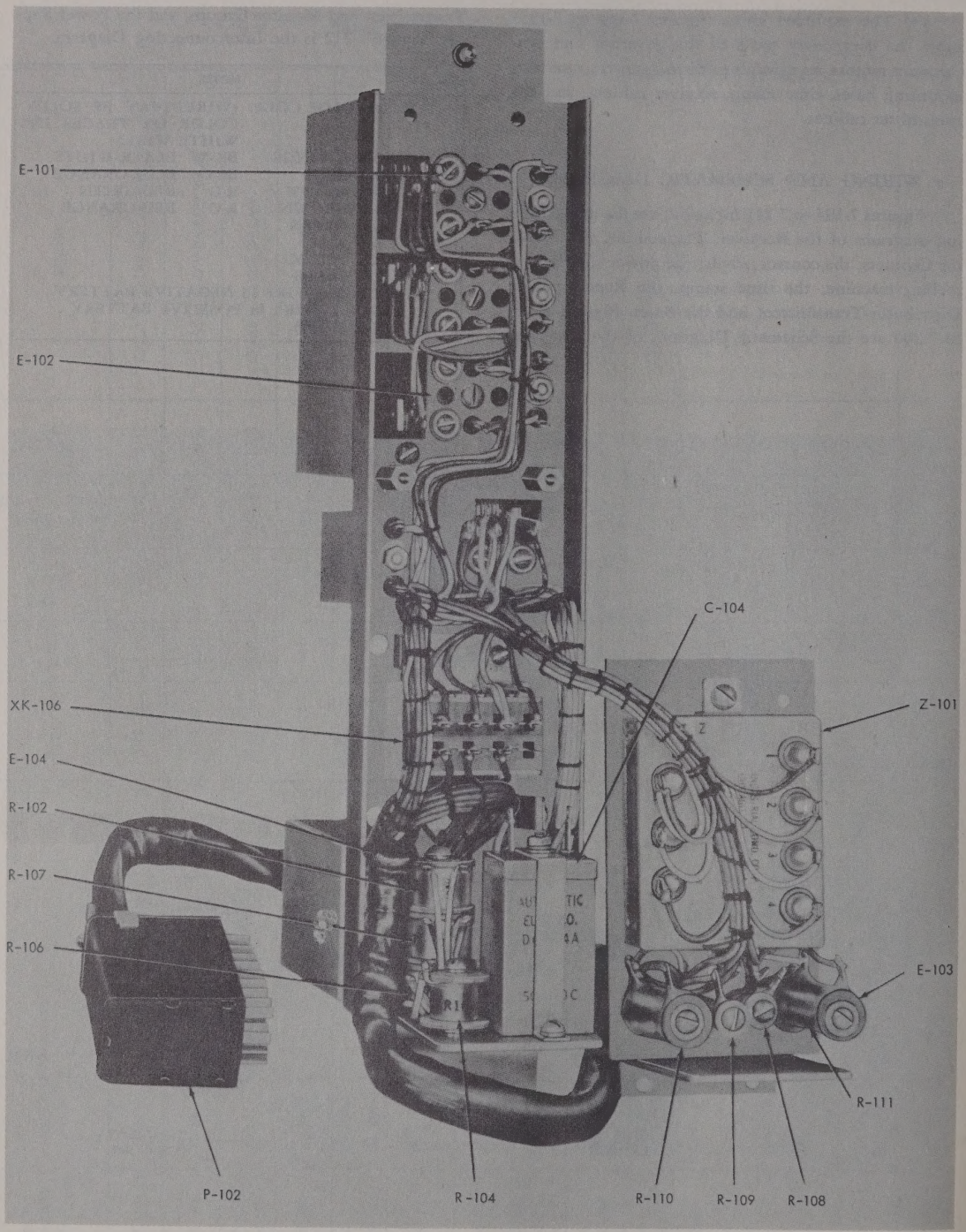

Figure 7—134. Control Panel SB-357/FGC, Rear View

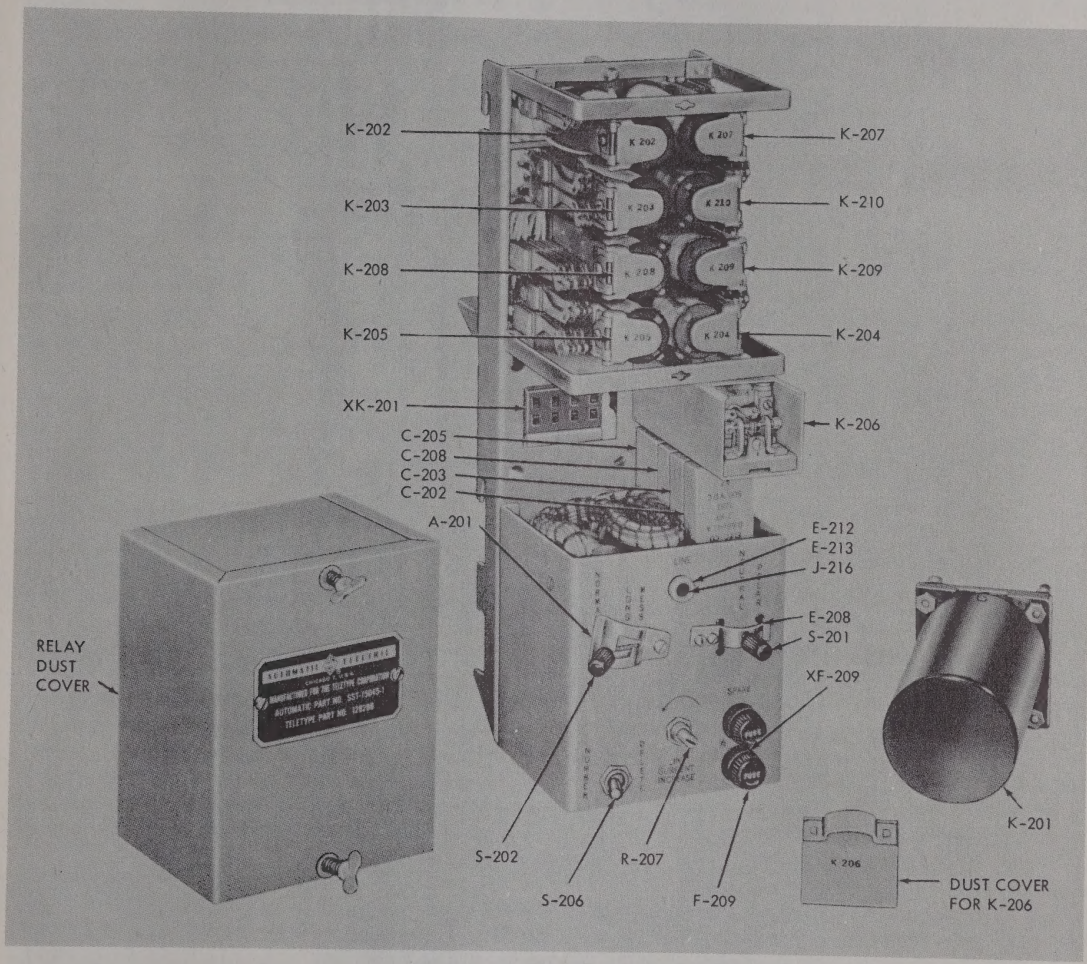

Figure 7—135. Control Panel SB-358/FGC, Front View

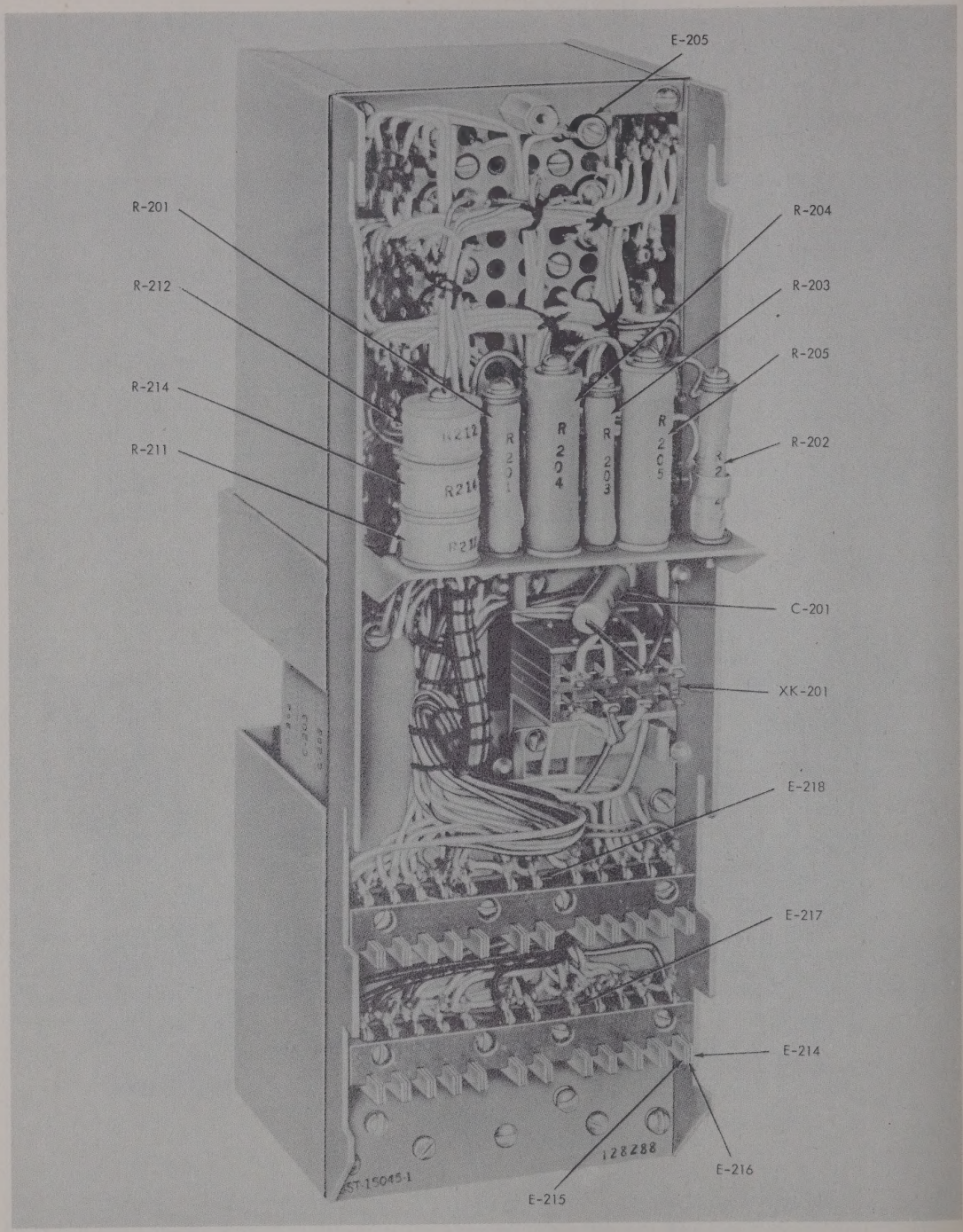

Figure 7—136. Control Panel SB-358/FGC, Rear View

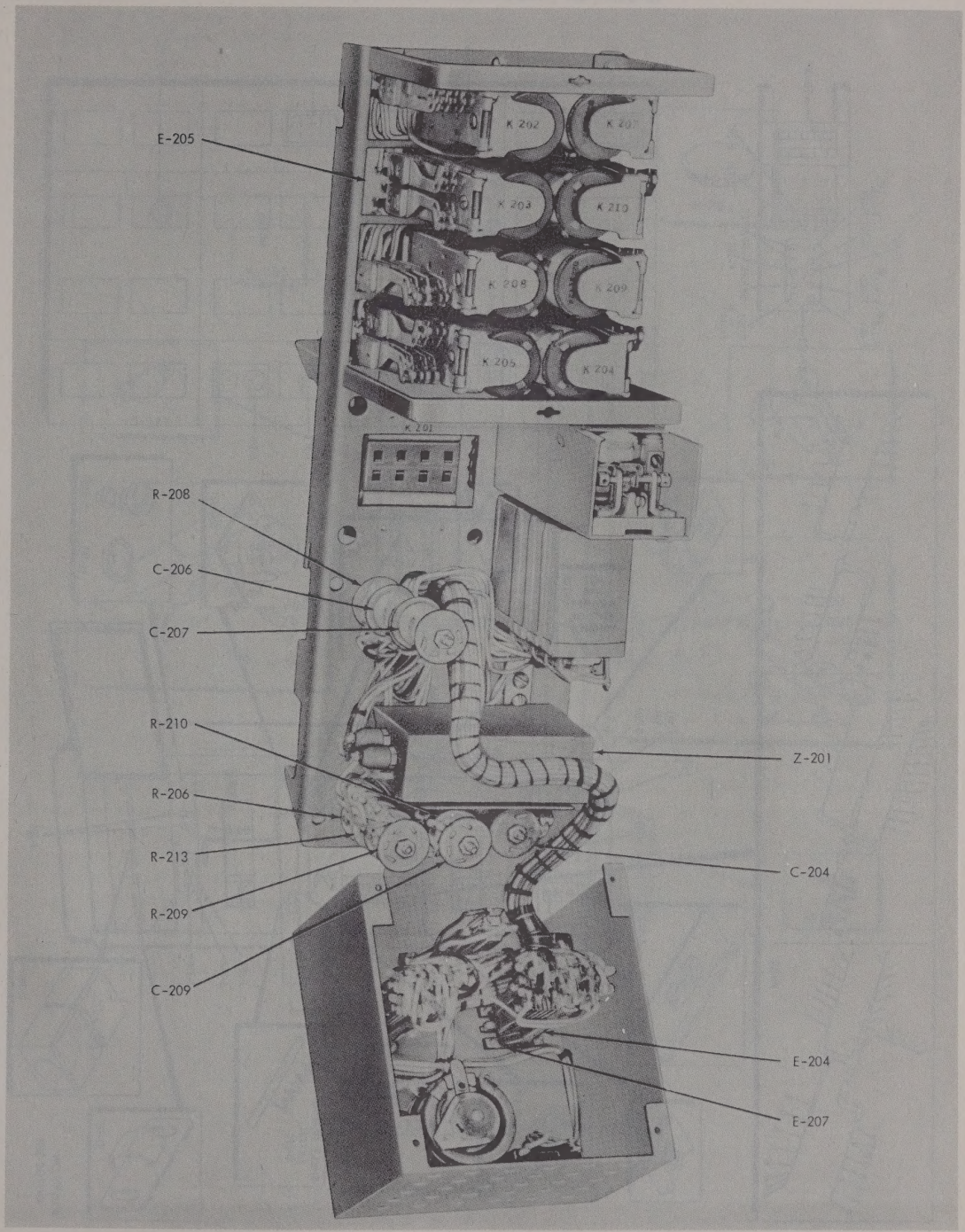

Figure 7-137. Control Panel SB-358/FGC, Control Box Removed

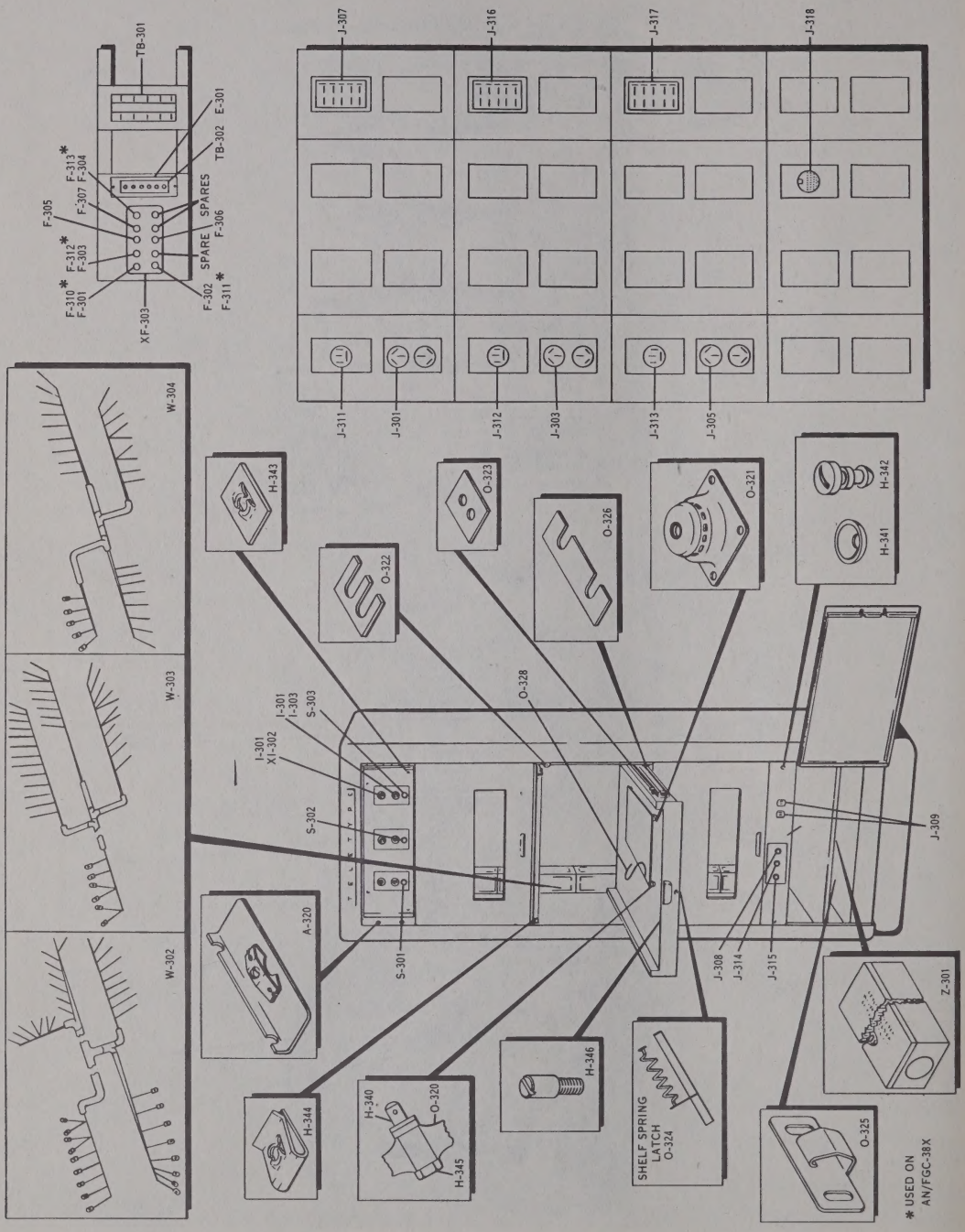

Figure 7—138. Monitor Cabinet Parts

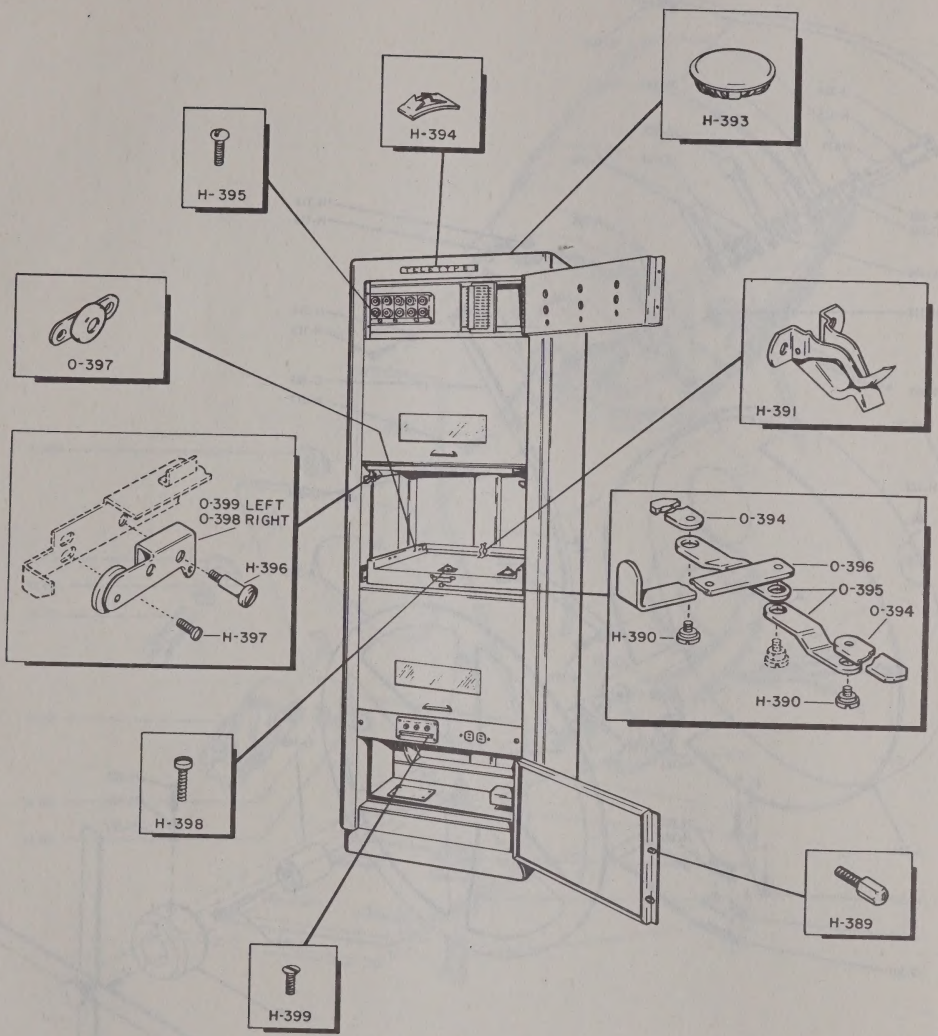

Figure 7—139. Monitor Cabinet Parts

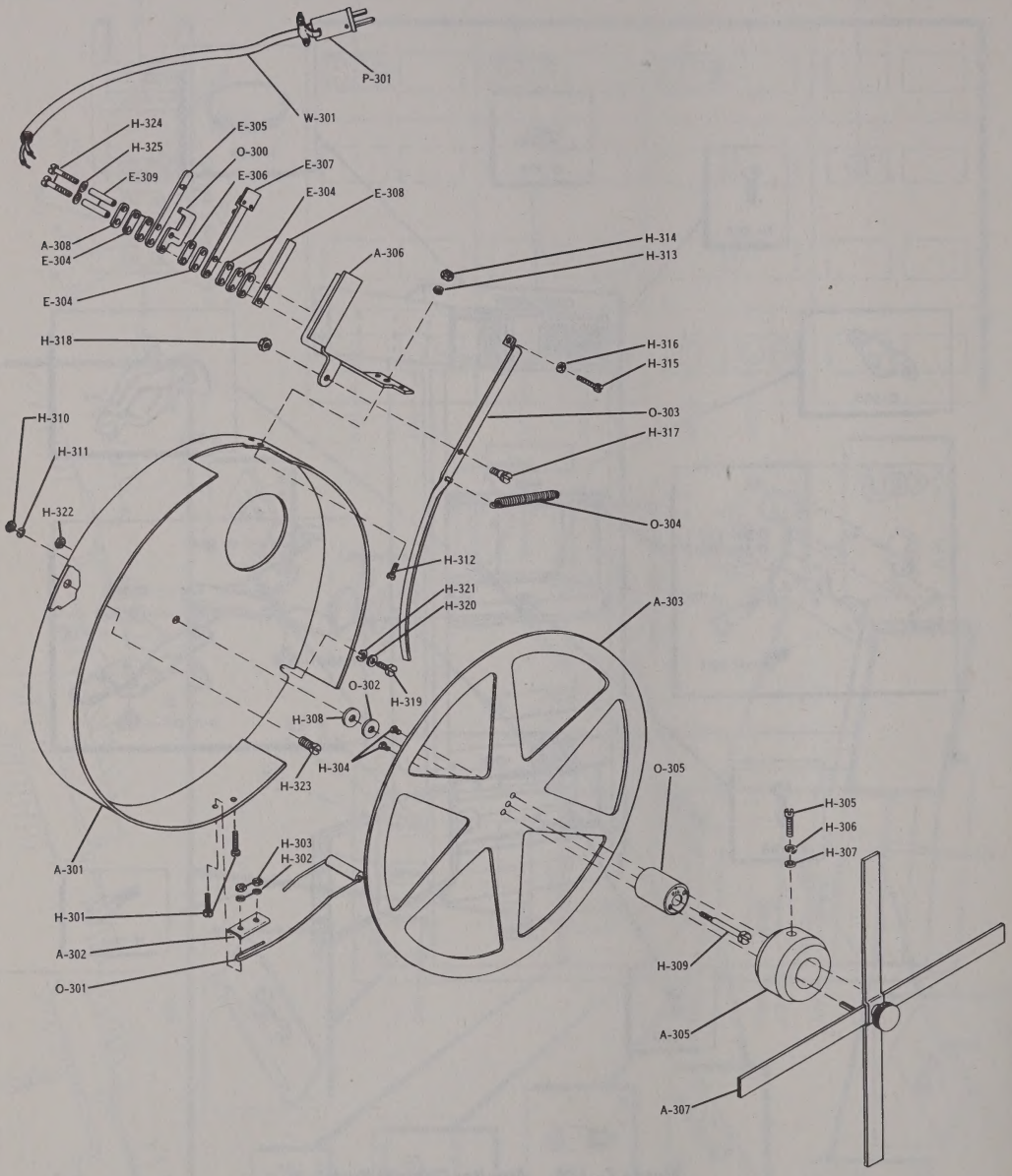

Figure 7—140. Monitor Reperforator Tape Container

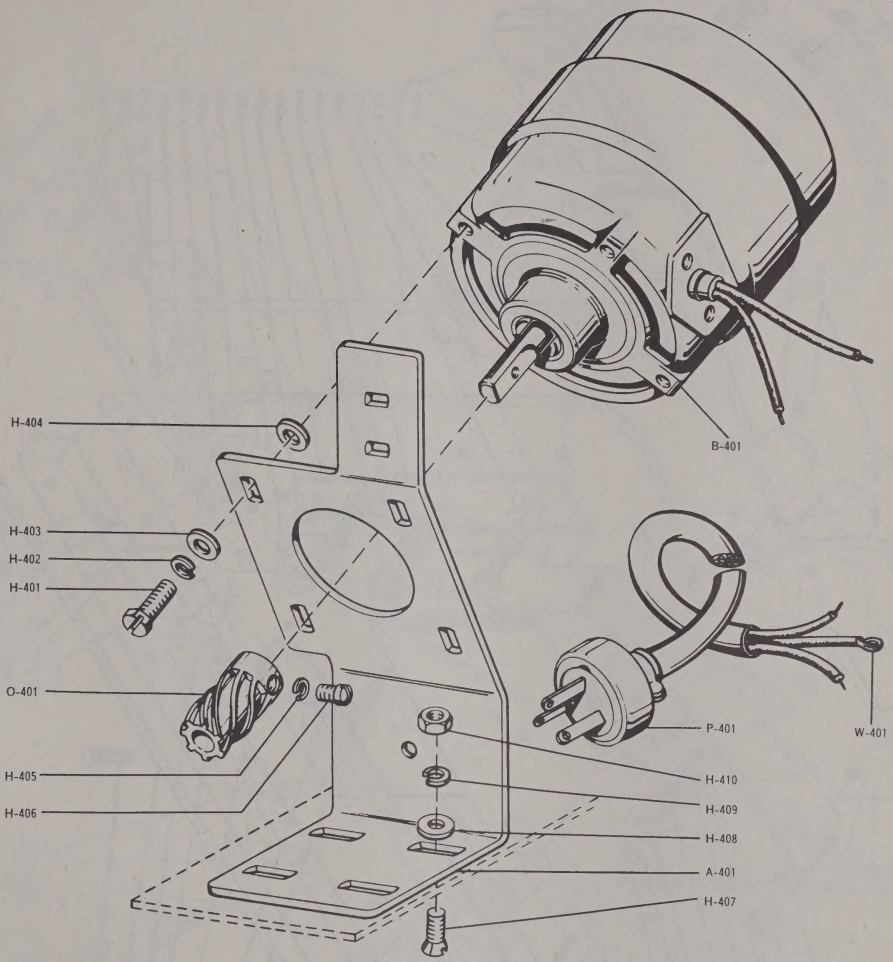

Figure 7—141. Reeling Machine RL-173/FGC, Motor Bracket Assembly

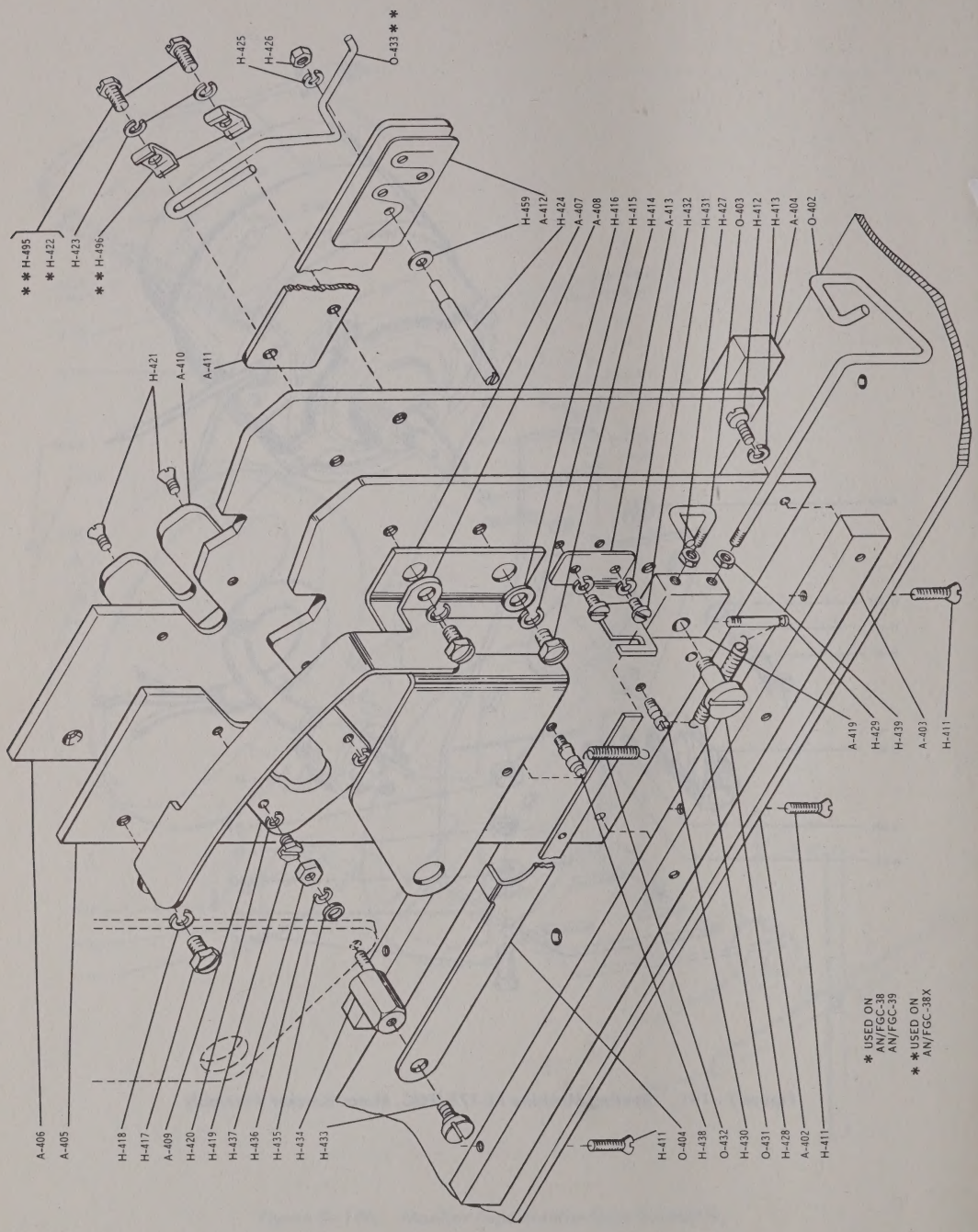

Figure 7—142. Reeling Machine RL-173/FGC, Base Assembly

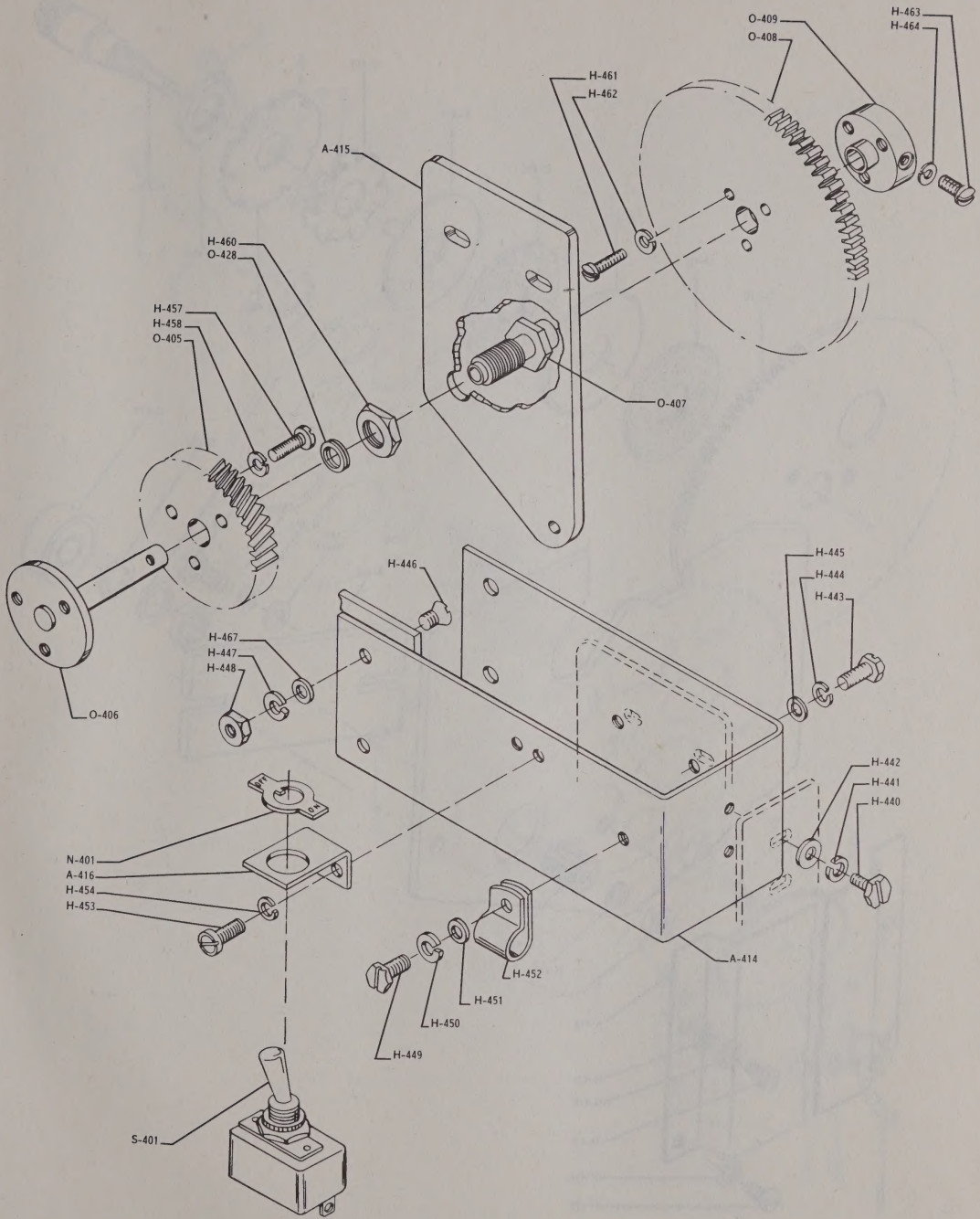

Figure 7—143. Reeling Machine RL-173/FGC, Driven Shaft Assembly

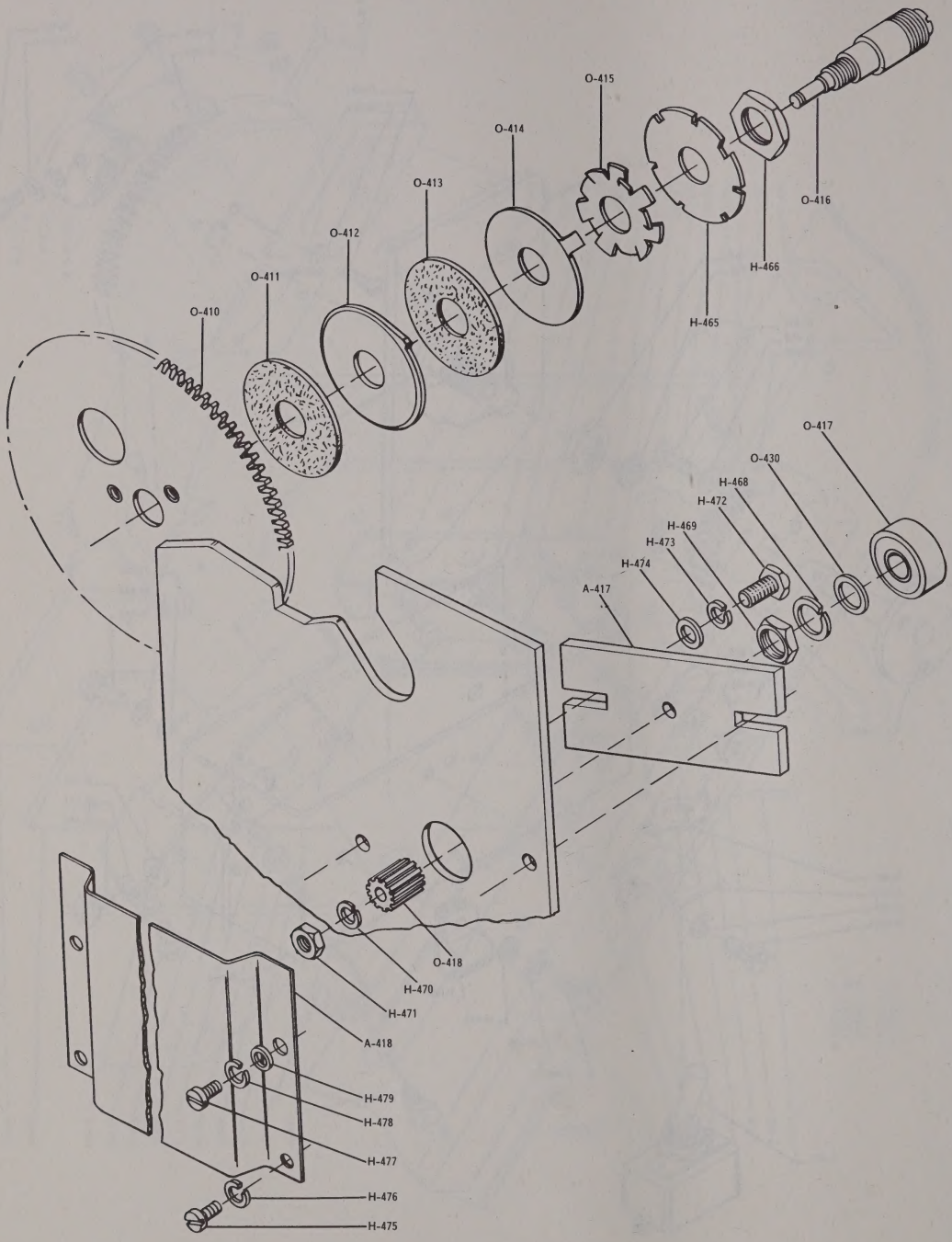

Figure 7—144. Reeling Machine RL-173/FGC, Intermediate Gear and Clutch Assembly

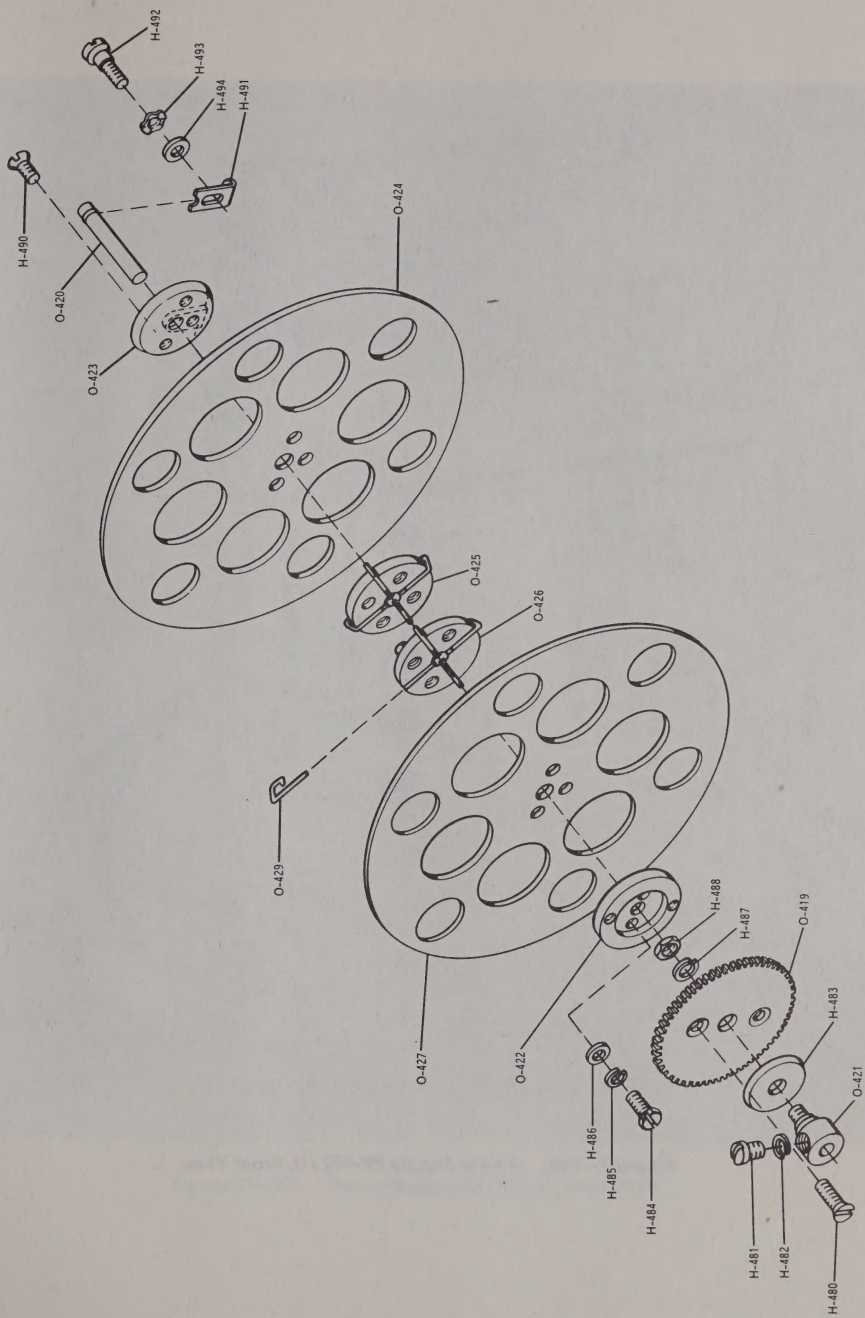

Figure 7—145. Reeling Machine RL-173/FGC, Tape Reel Assembly

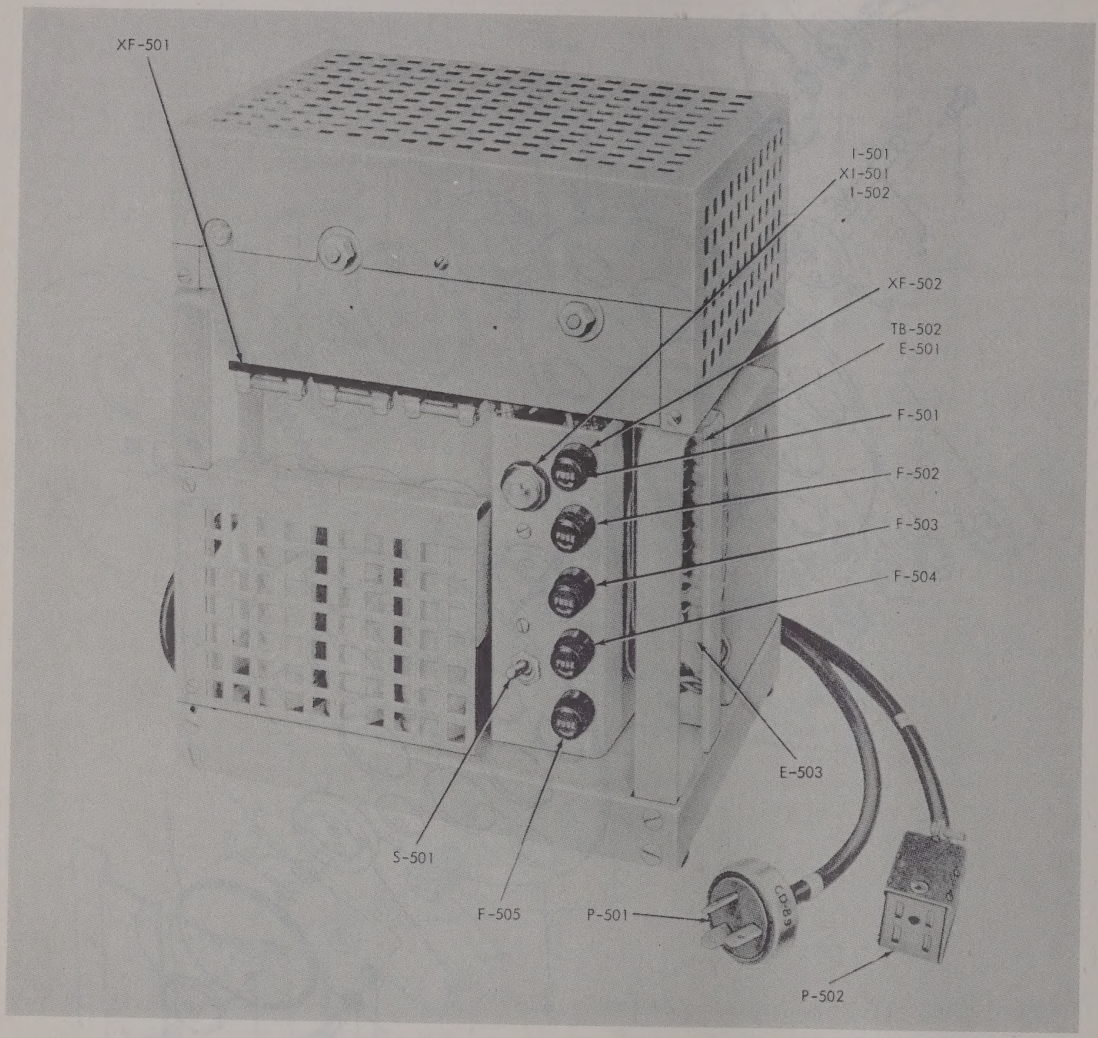

Figure 7—146. Power Supply PP-987/U, Front View

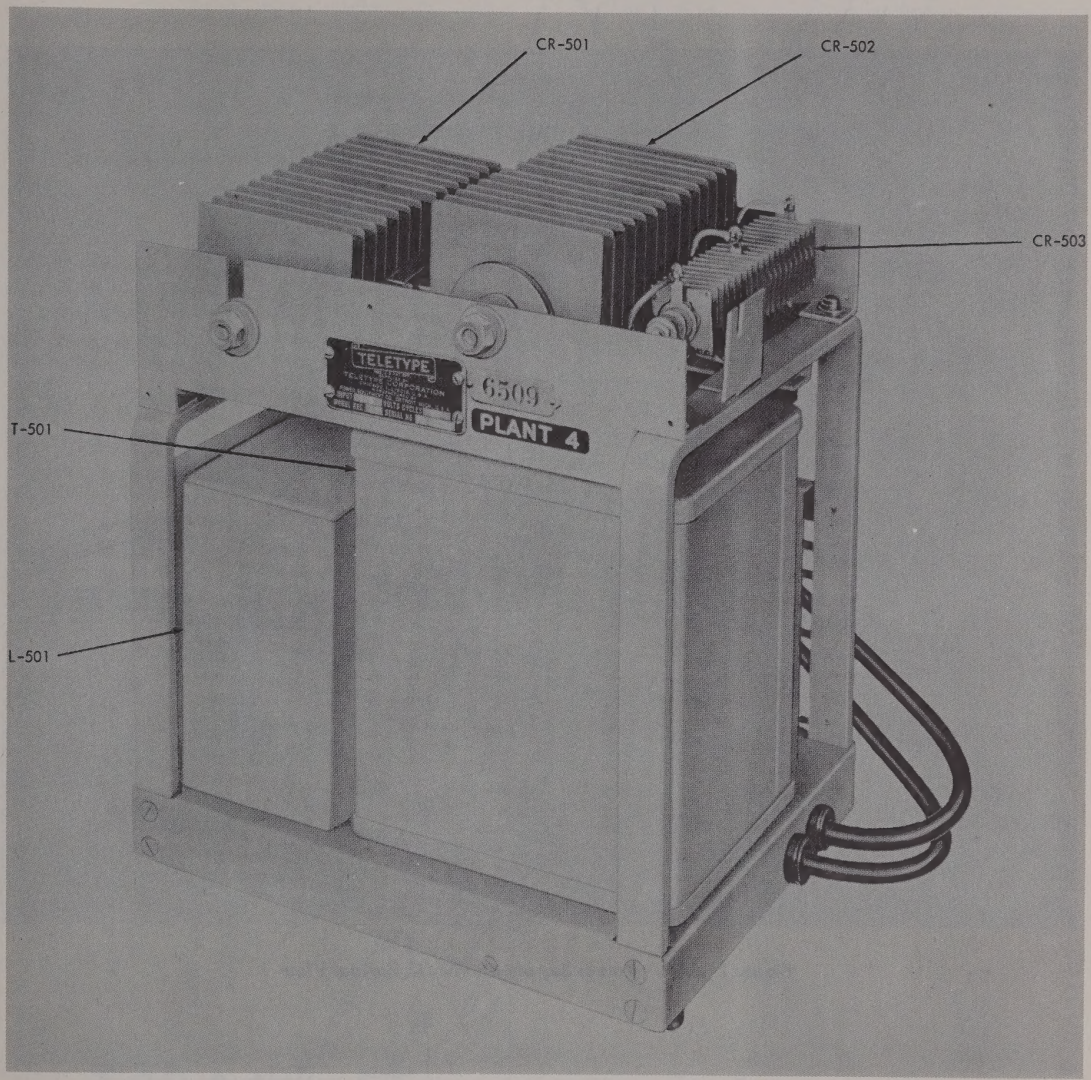

Figure 7—147. Power Supply PP-987/U, Rear View

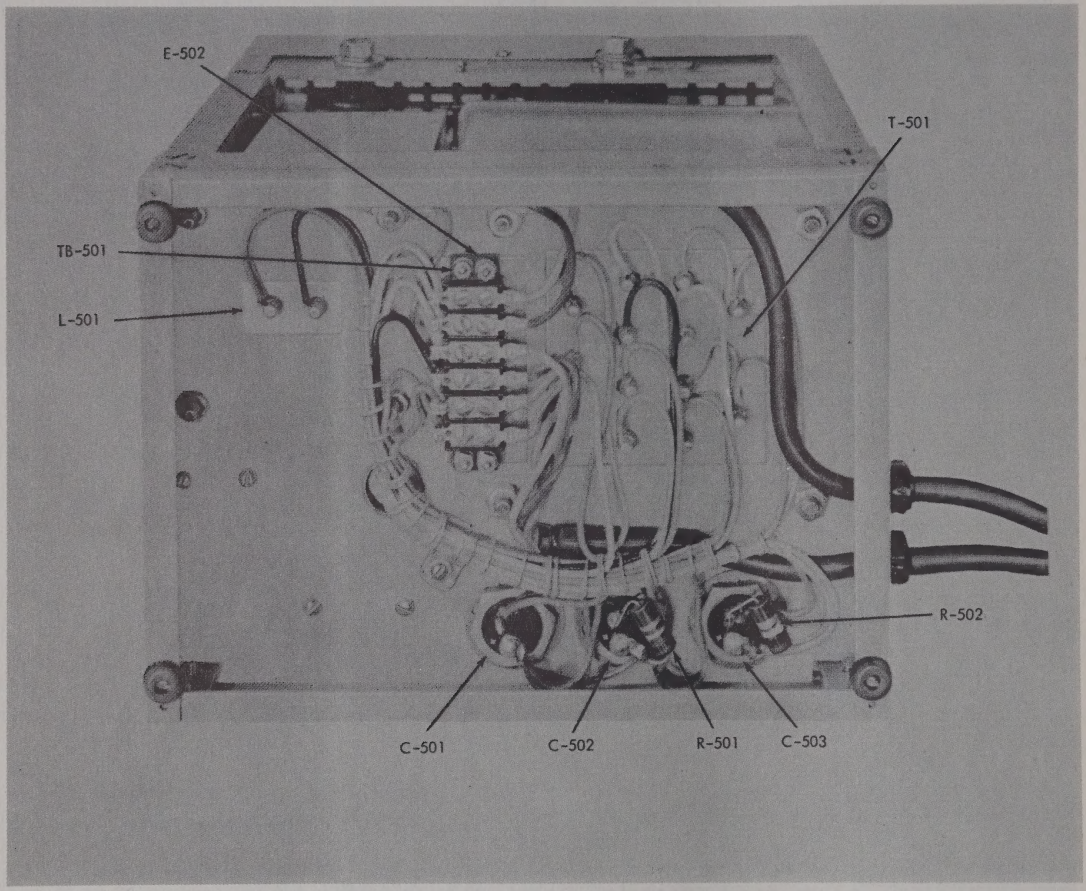

Figure 7—148. Power Supply PP-987/U, Bottom View

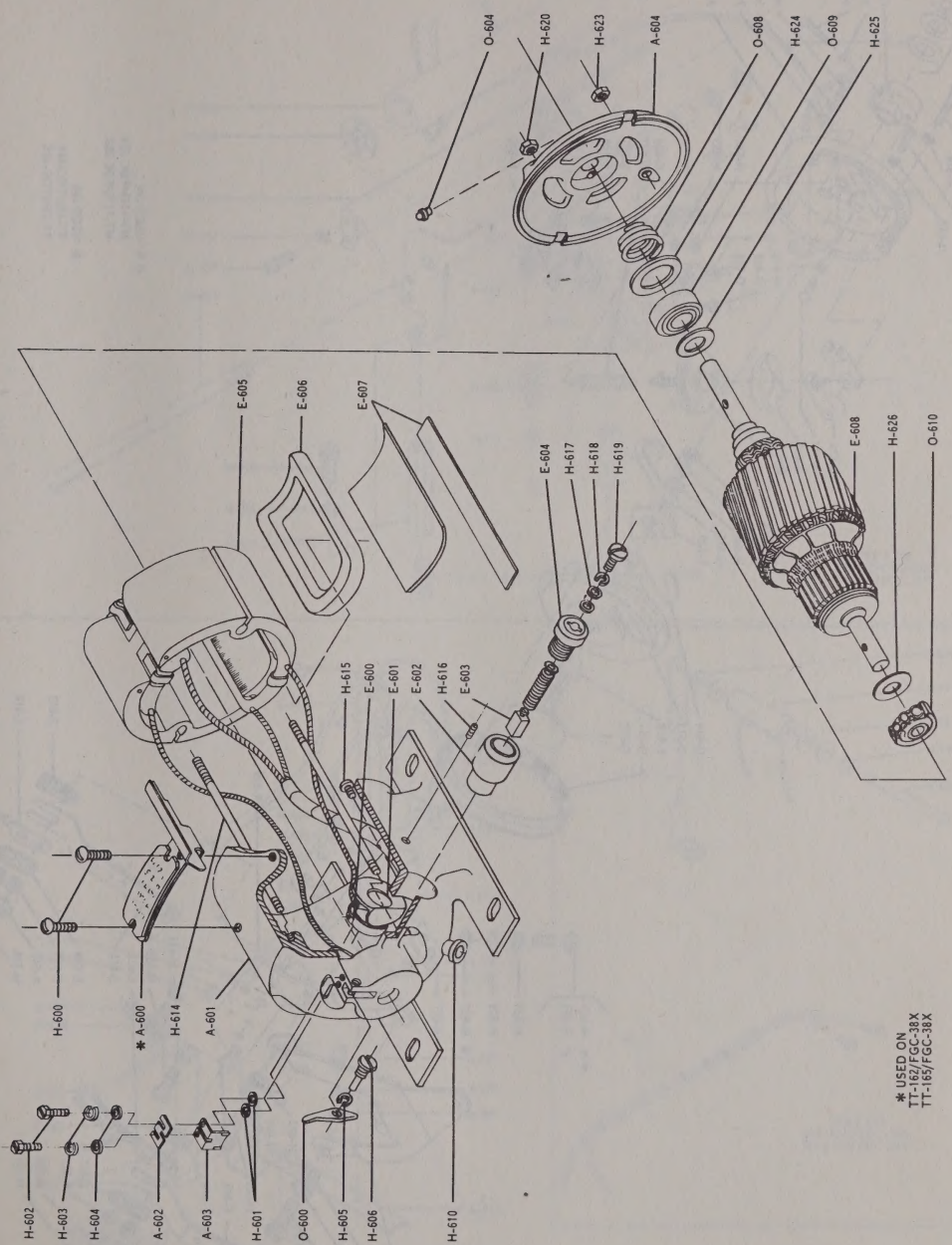

Figure 7—149. Governed Motor

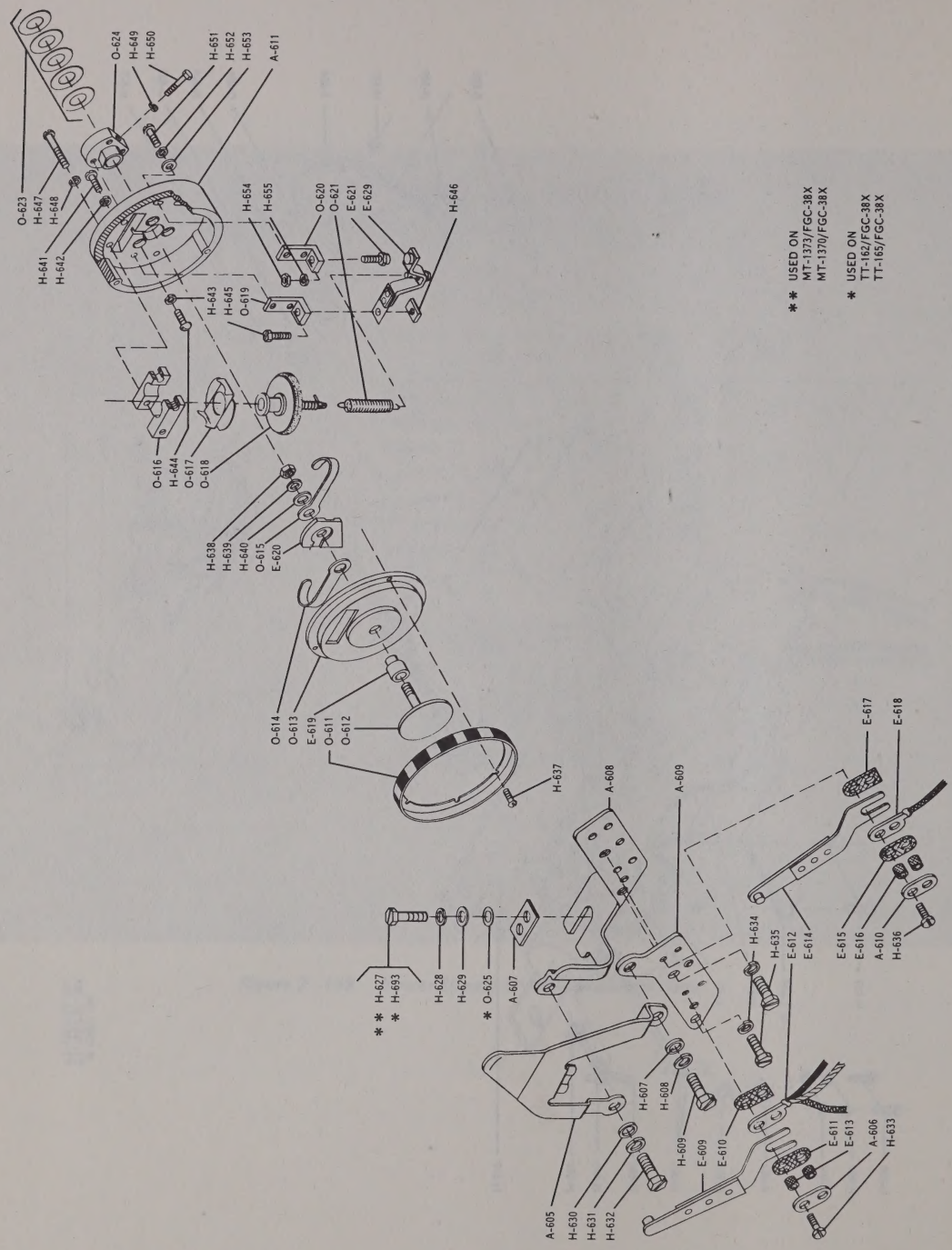

Figure 7—150. Governor Parts

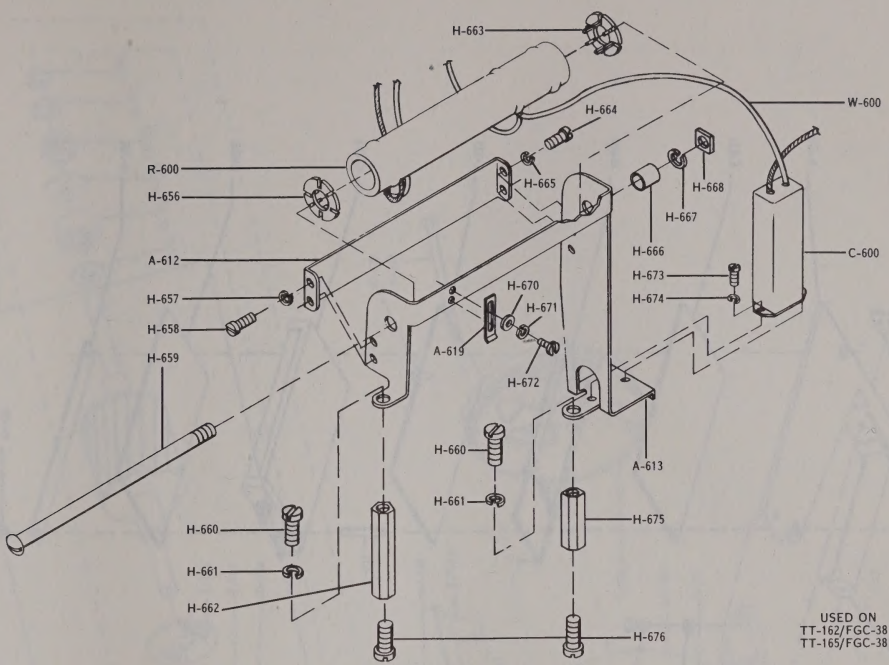

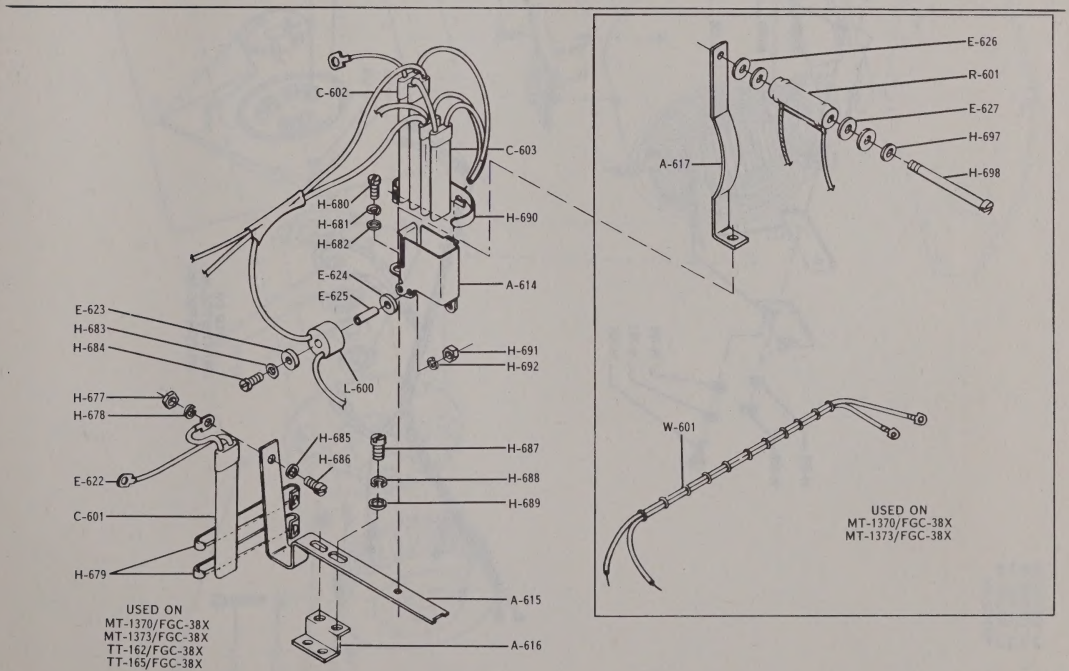

Figure 7—151. Motor Resistor and Filter Assemblies

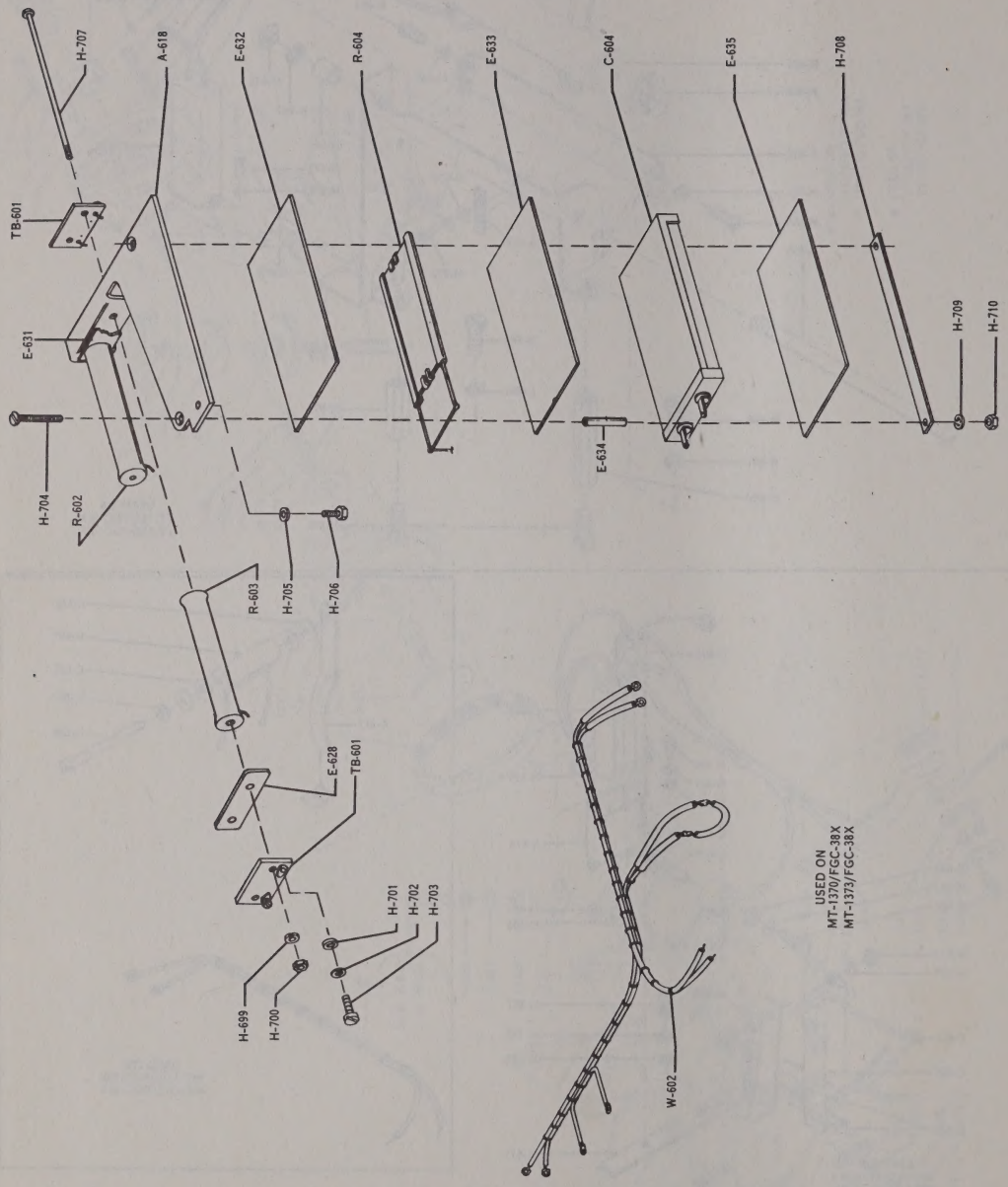

Figure 7—152. Resistor Assembly for MT-1370/FGC-38X and MT-1373/FGC-38X

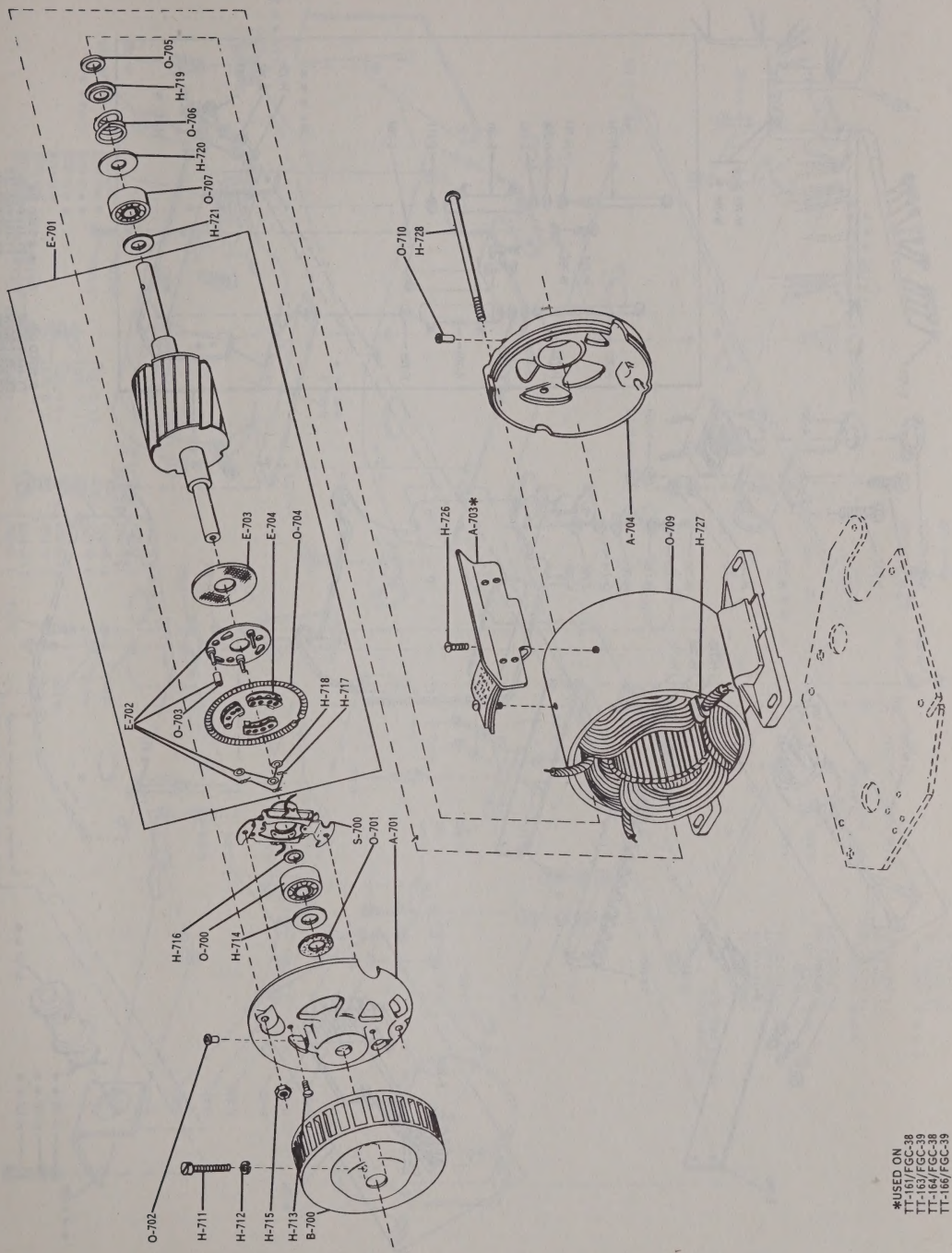

Figure 7—153. Synchronous Motor

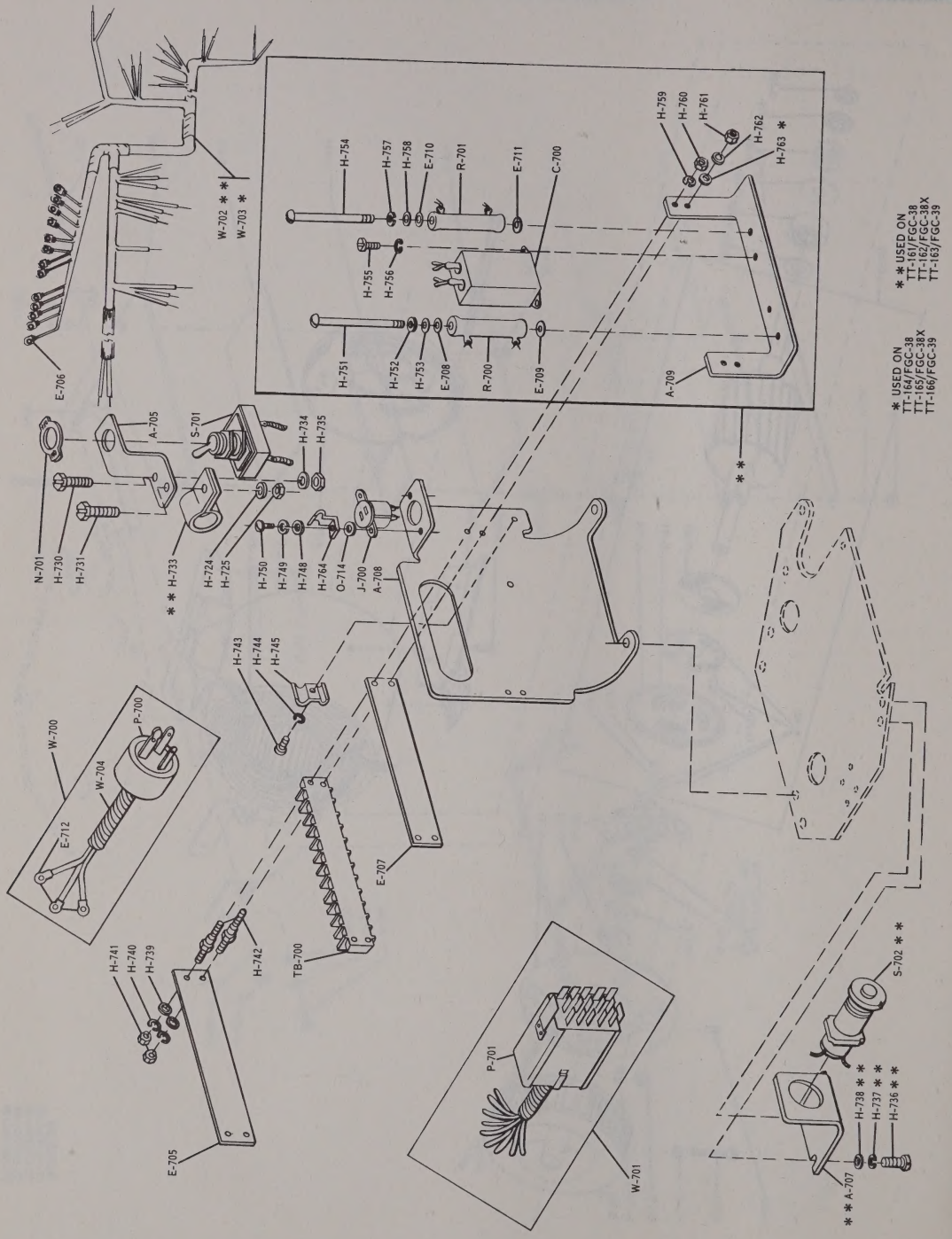

Figure 7—154. Synchronous Motor Filter Assembly

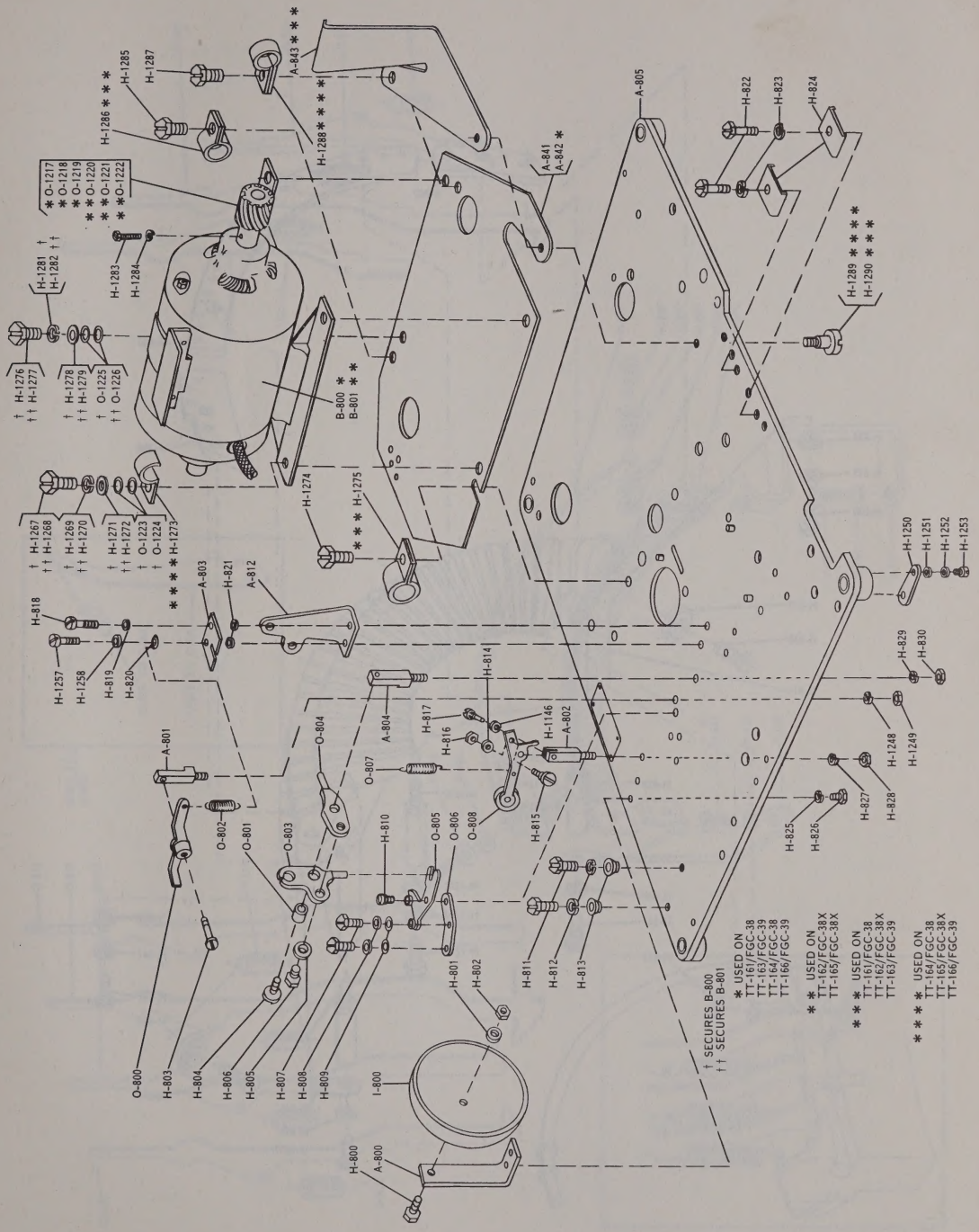

Figure 7—155. Reperforator Base Plate Assembly

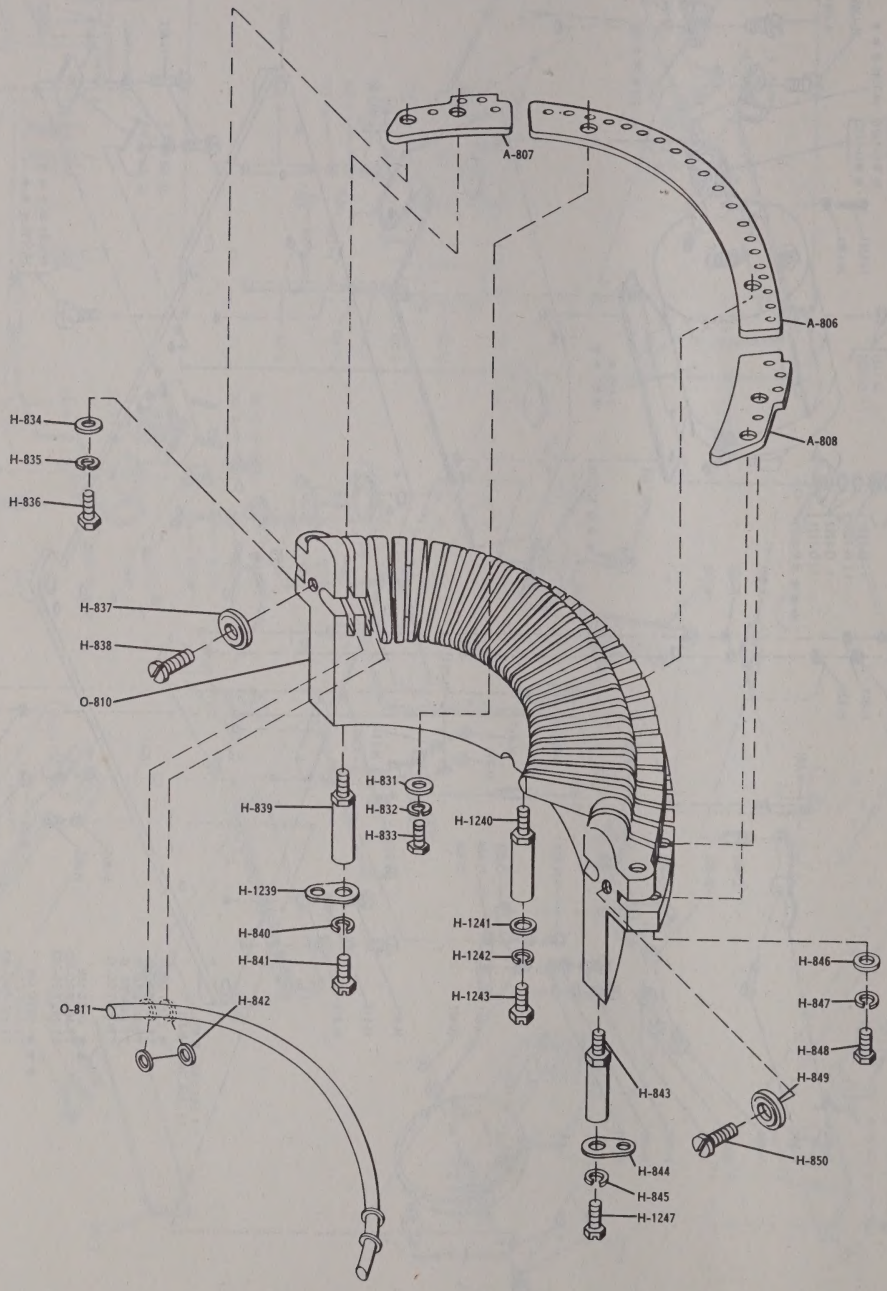

Figure 7—156. Type Bar Basket Assembly

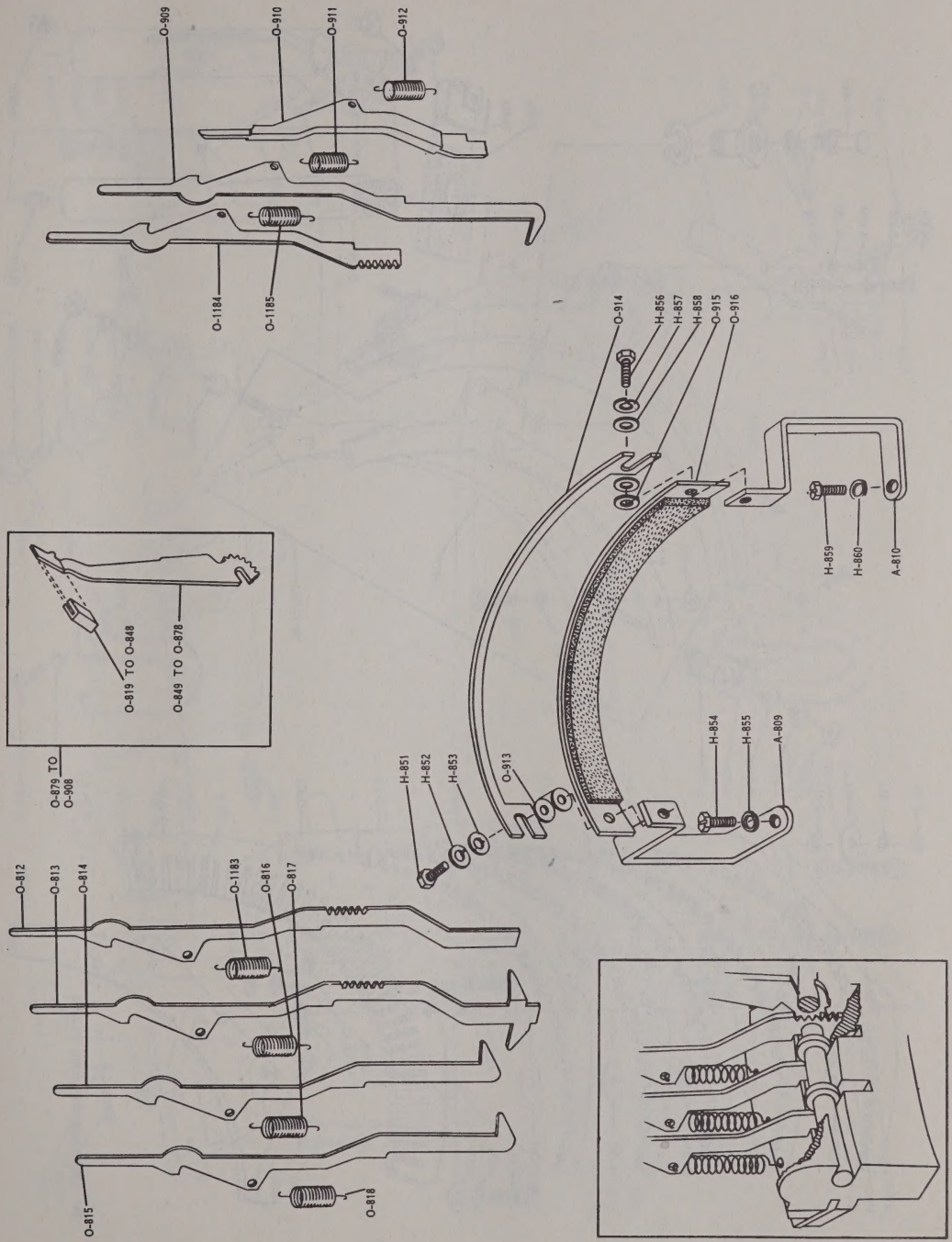

Figure 7—157. Type Bars and Springs

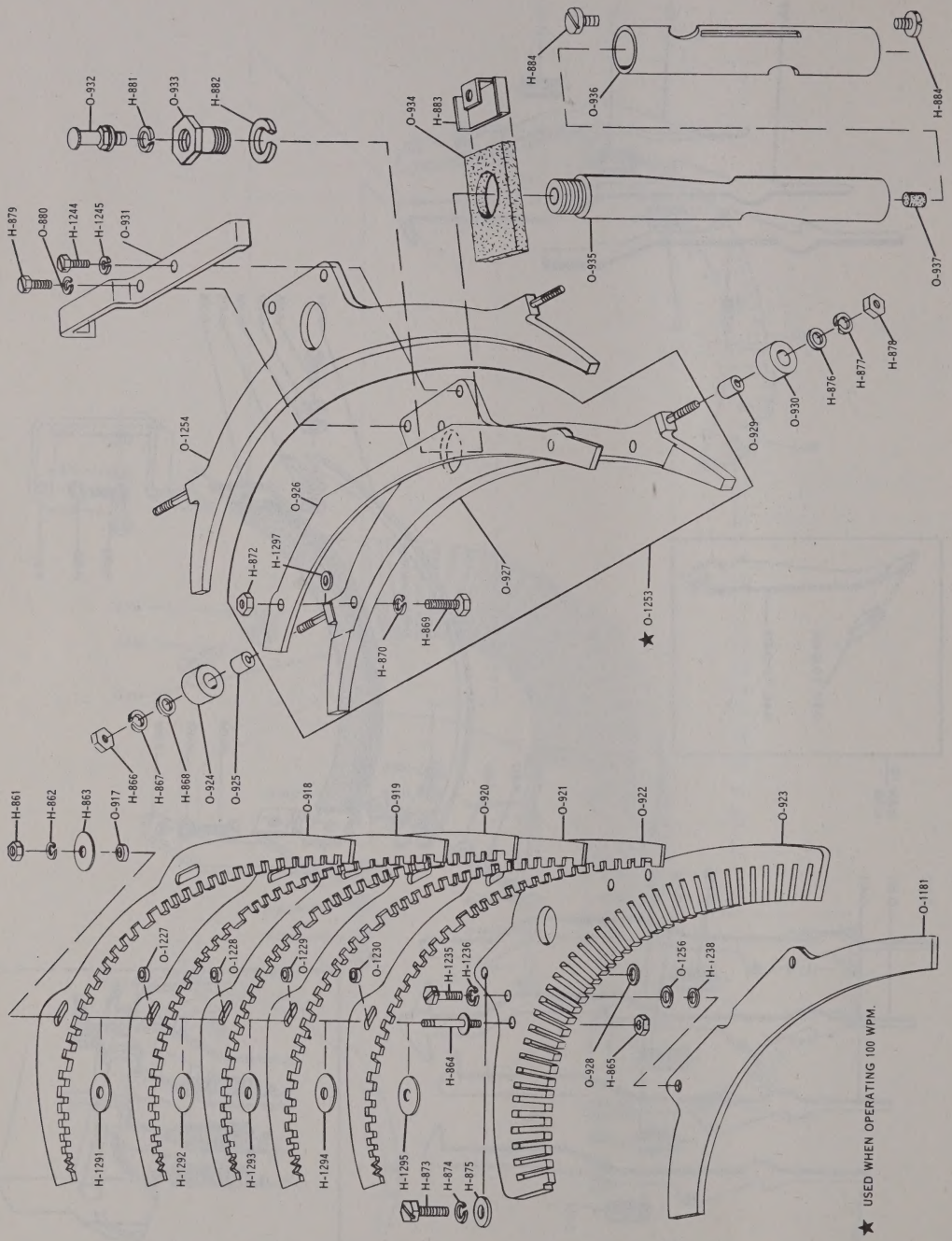

Figure 7—158. Code Bars and Main Bail Assembly

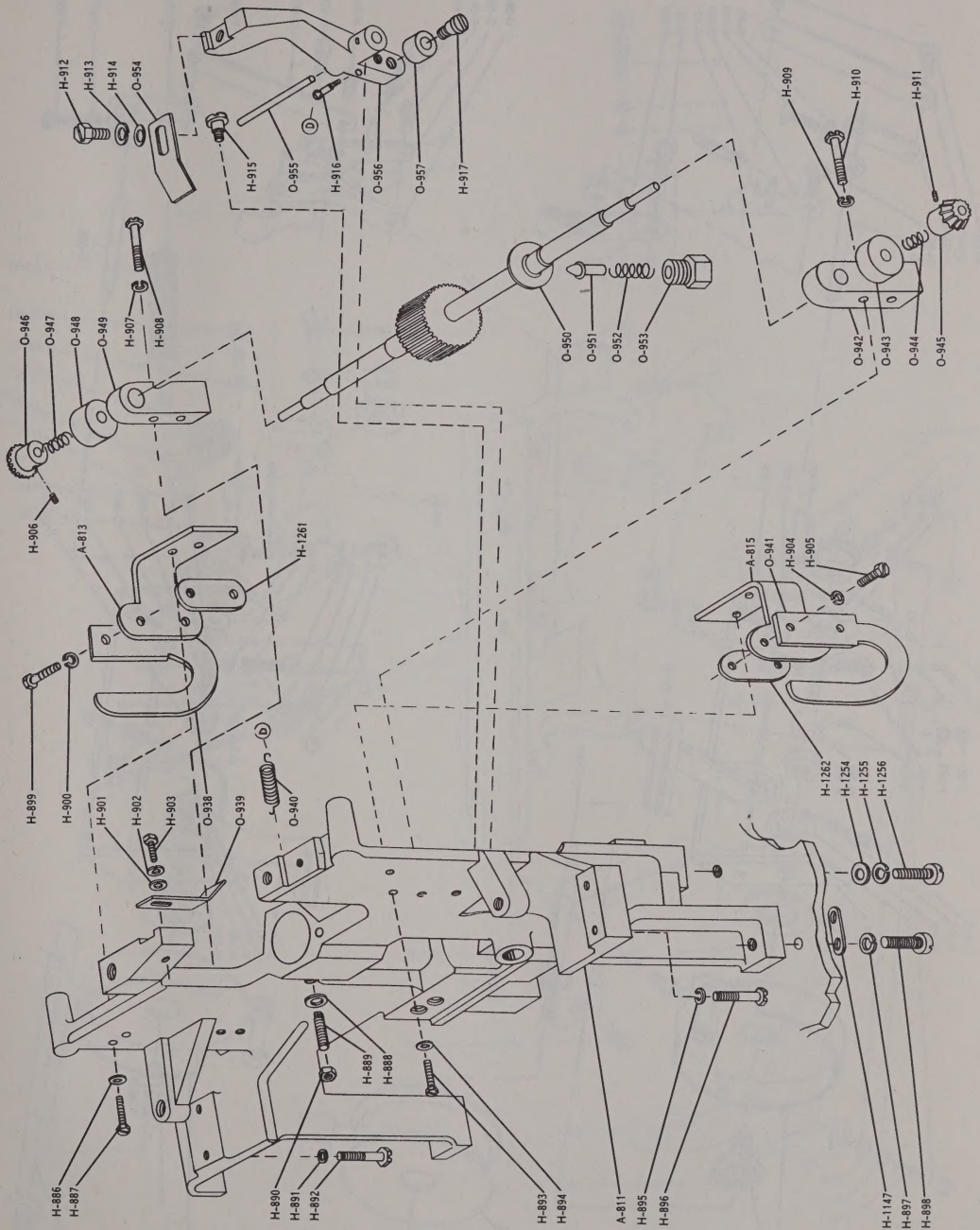

Figure 7—159. Main Bail Basket Assembly

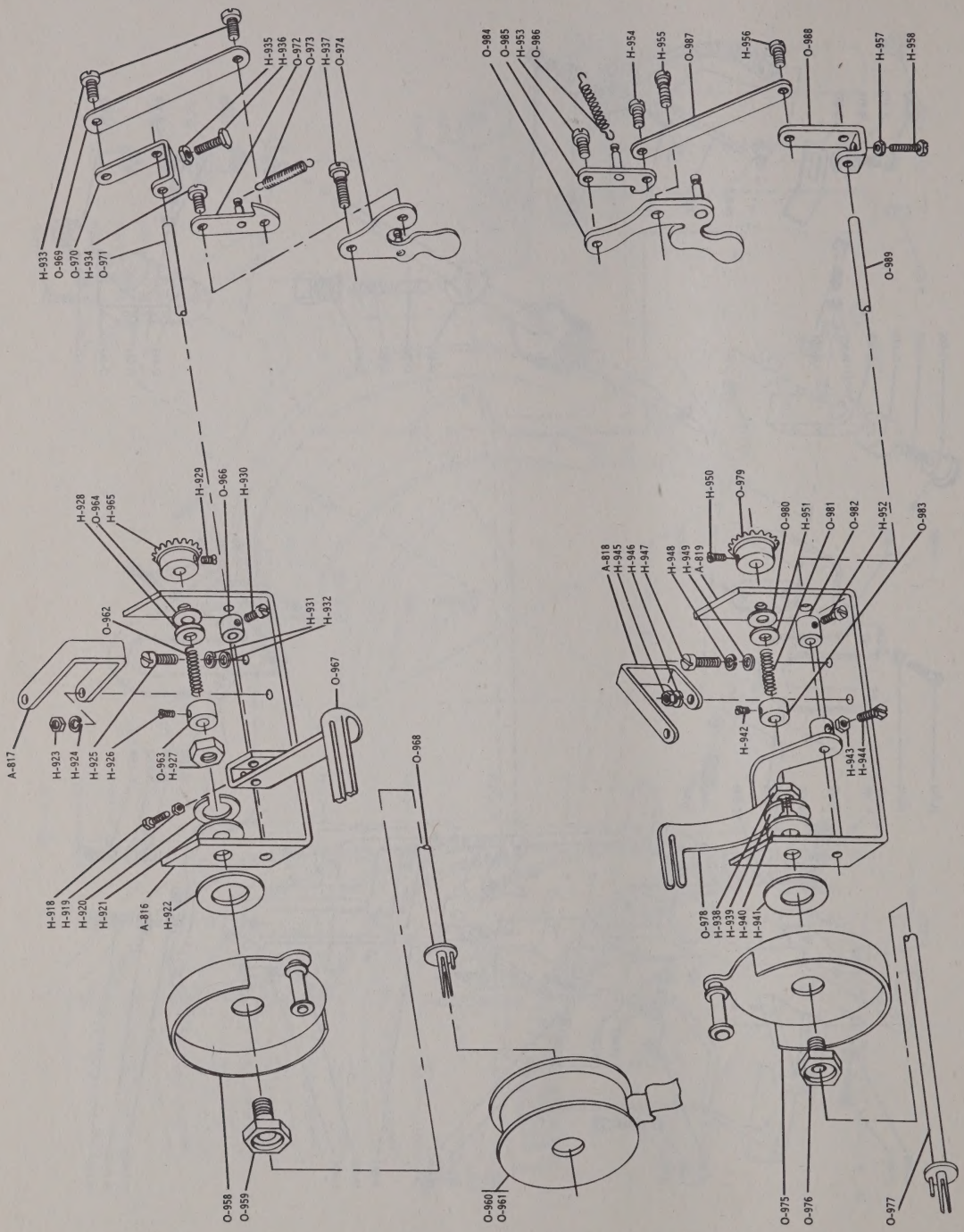

Figure 7—160. Ribbon Feed Mechanism

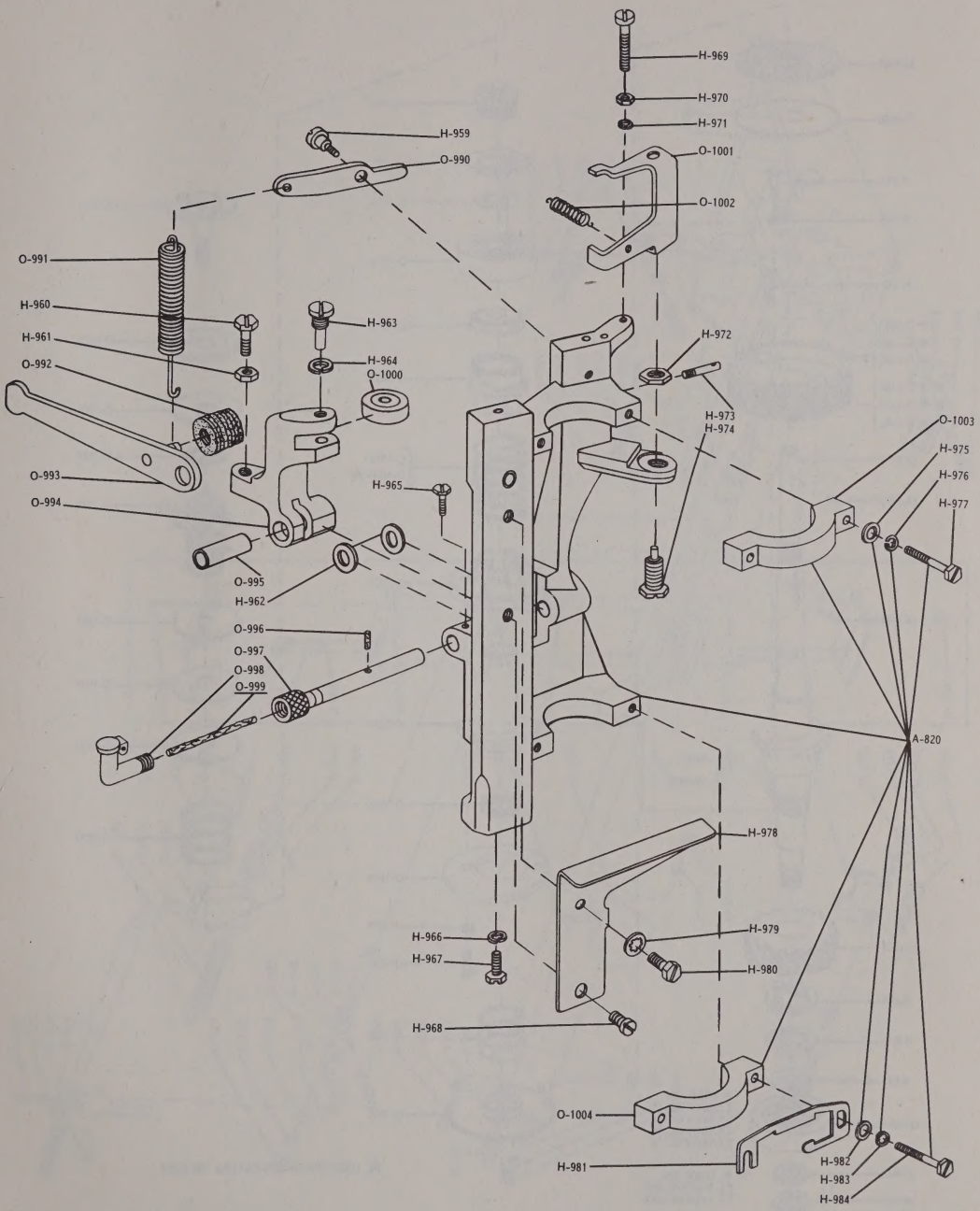

Figure 7—161. Main Shaft Bracket Assembly

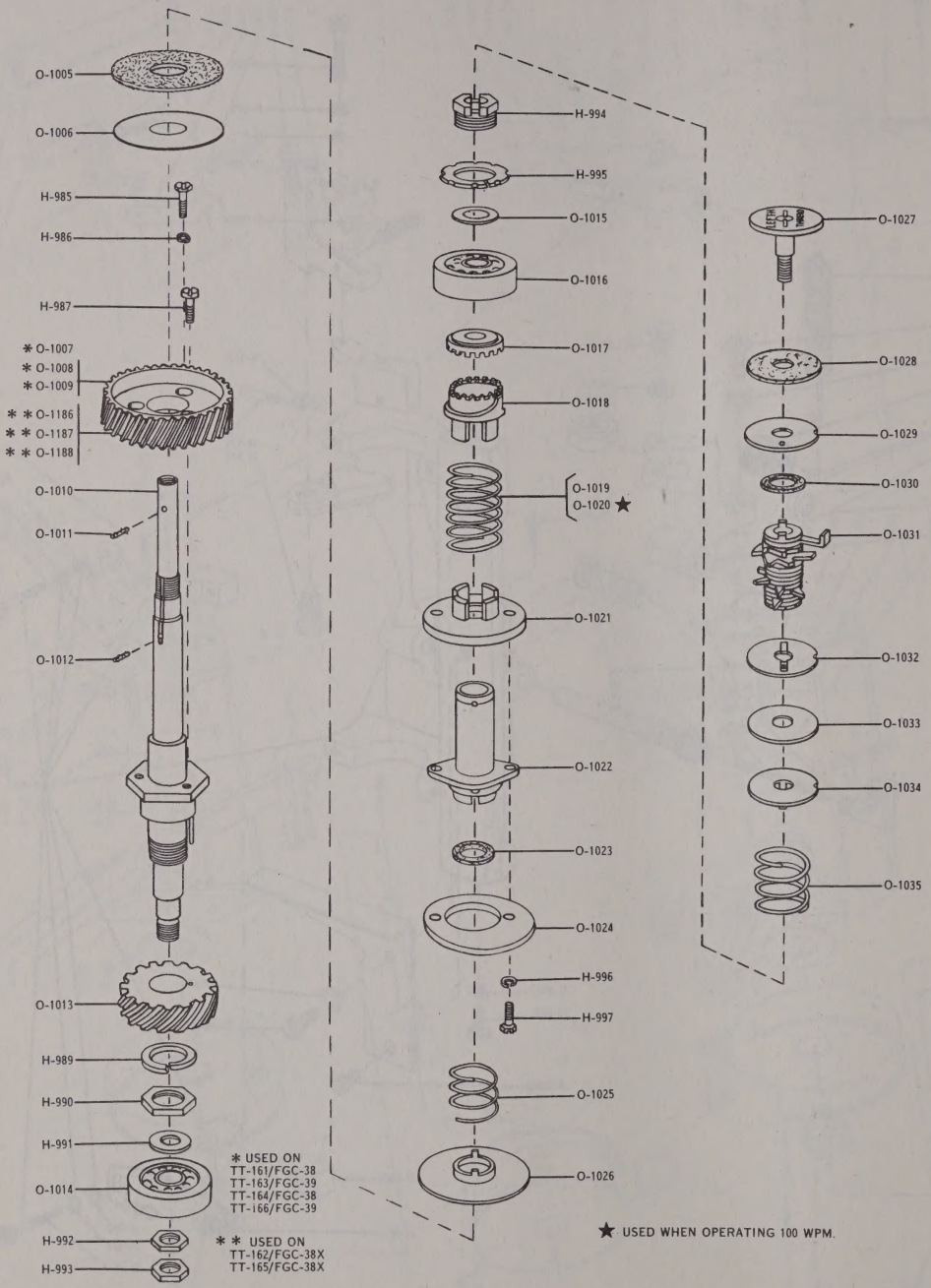

Figure 7–162. Main Shaft Assembly

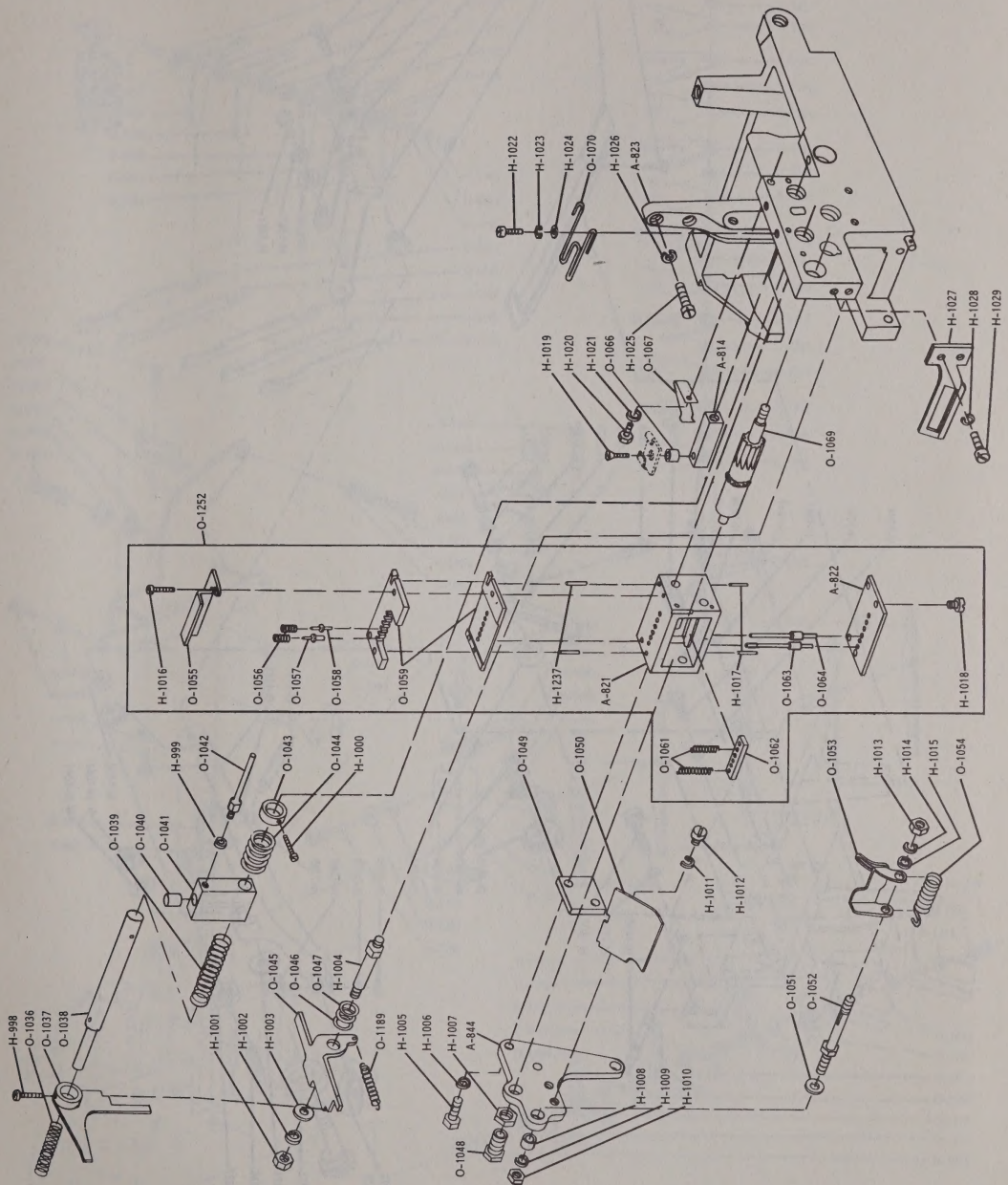

Figure 7—163. Punch Block Assembly

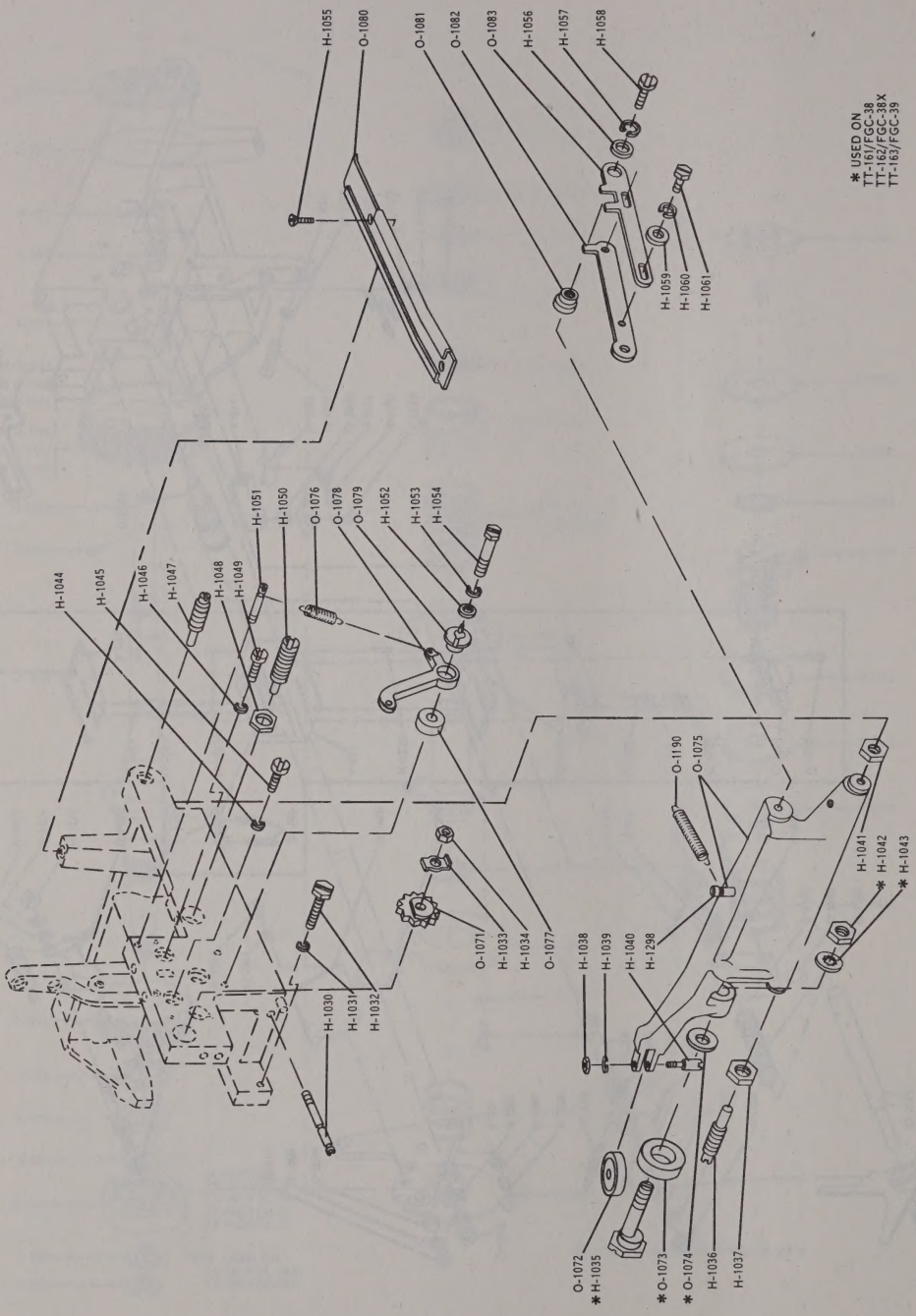

Figure 7—164. Punch Arm Assembly

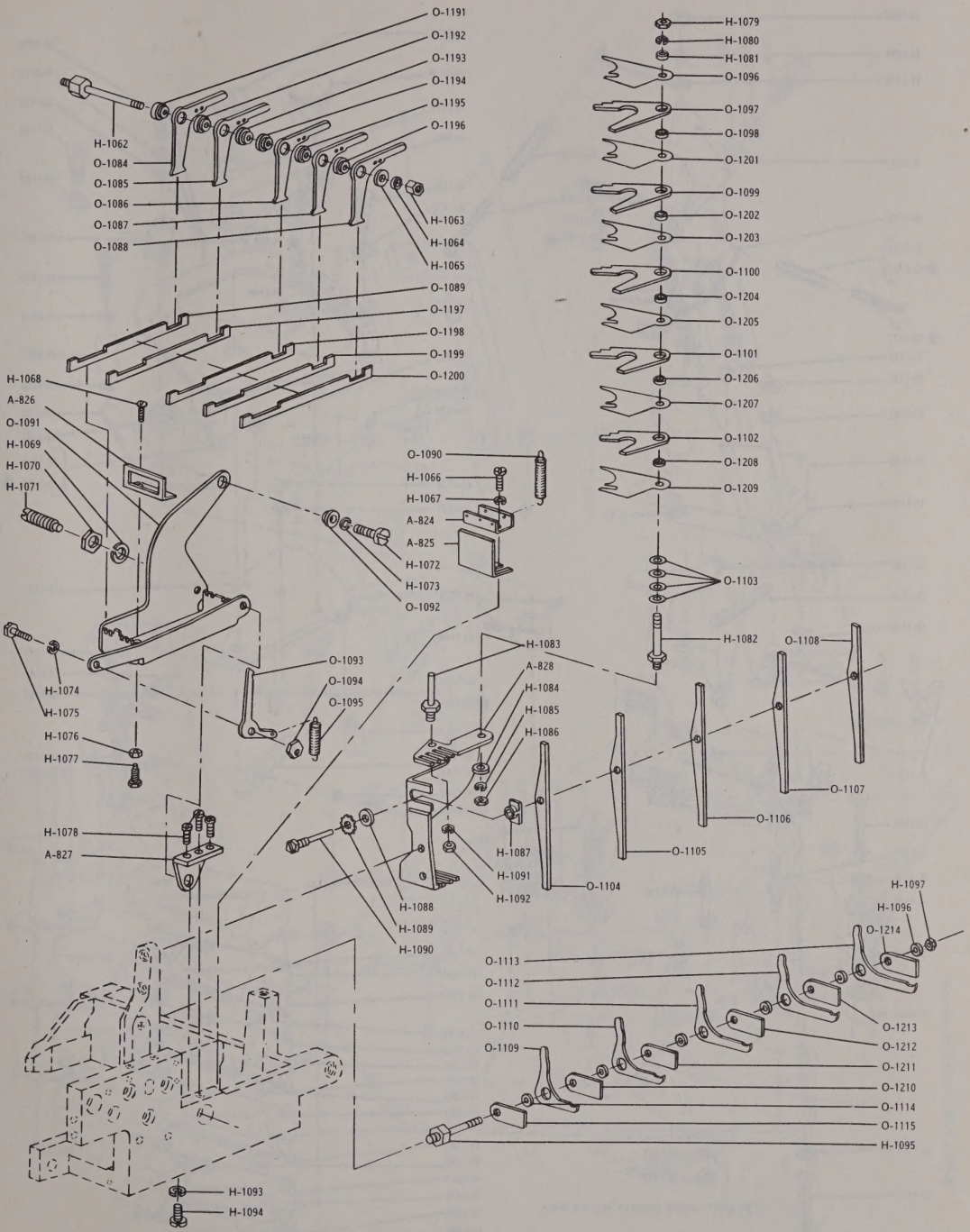

Figure 7—165. Vertical Link Basket Assembly

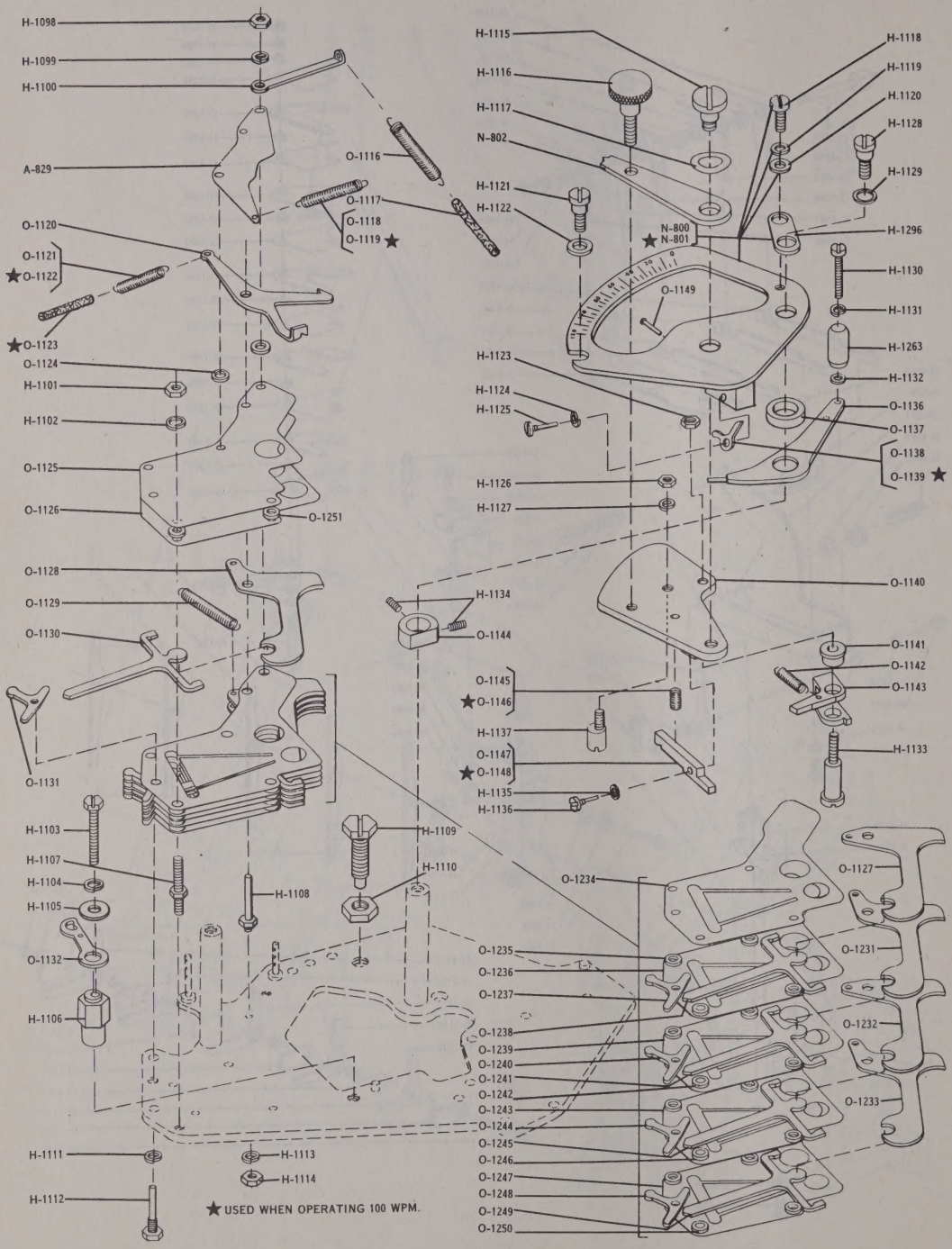

Figure 7—166. Selector Mechanism and Range Scale Assembly

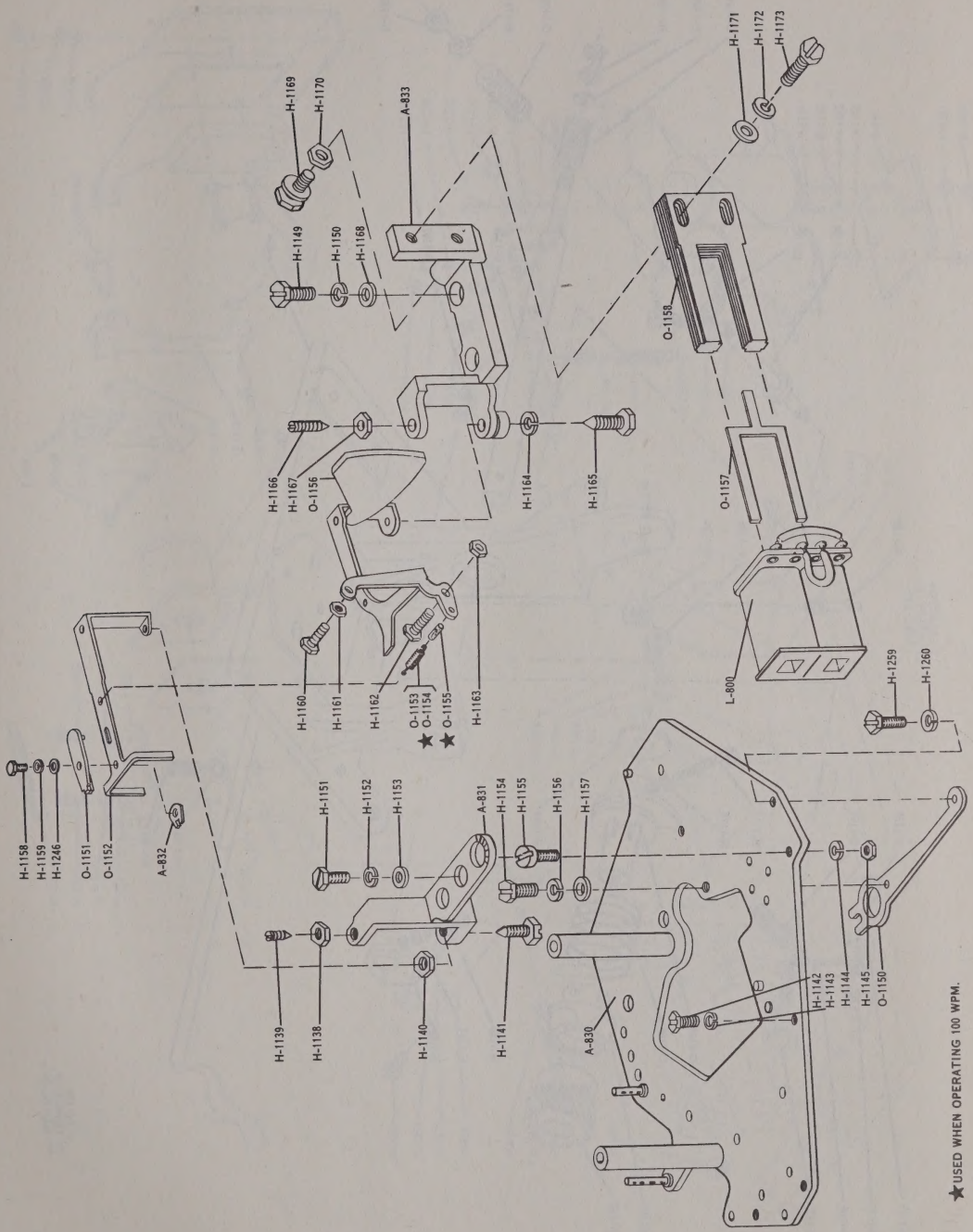

Figure 7—167. Selector Assembly

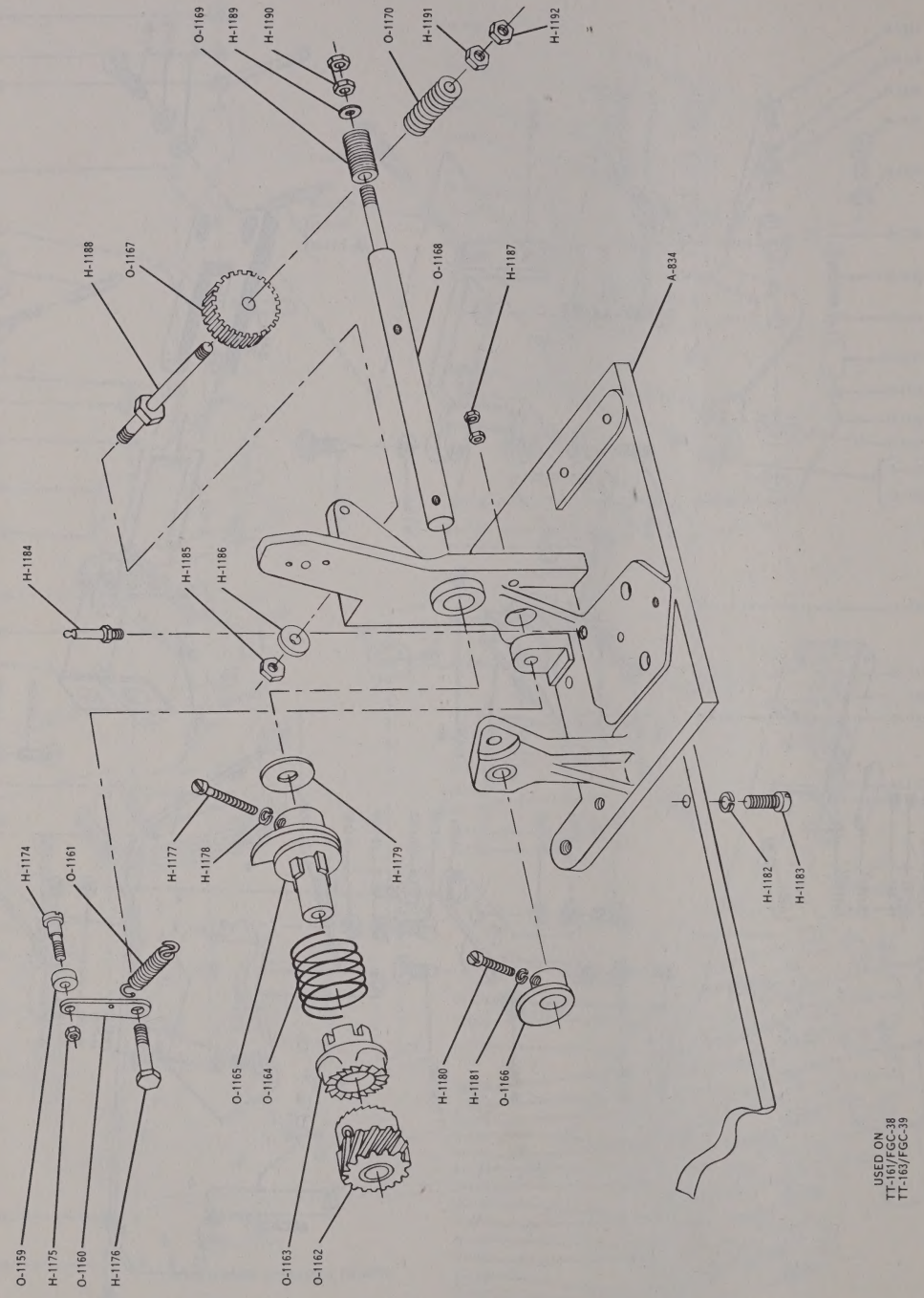

Figure 7—168. Tape Feed-out Base Plate and Clutch Shaft

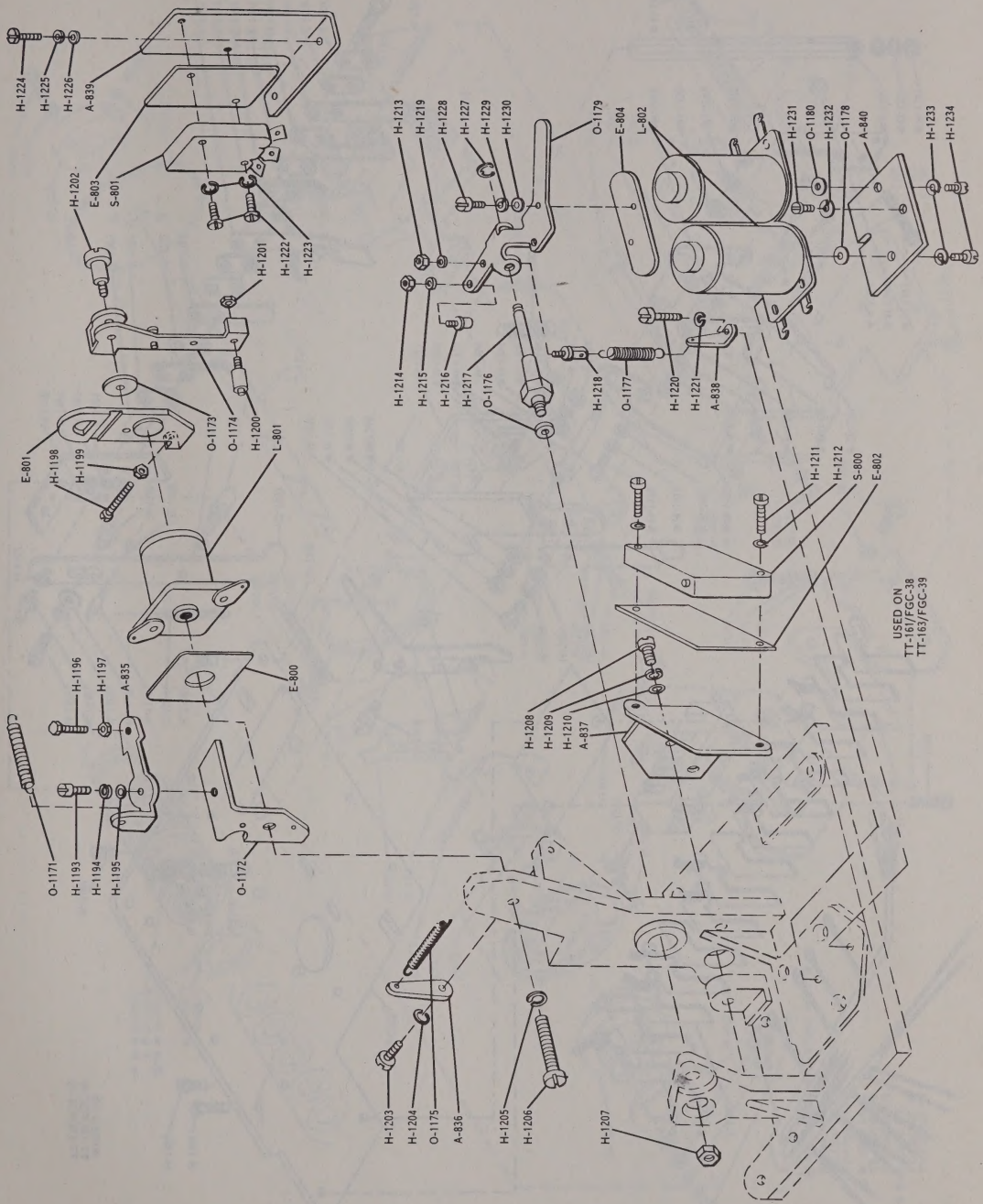

Figure 7—169. Tape Feed-out Magnets and Worm Follower Assembly

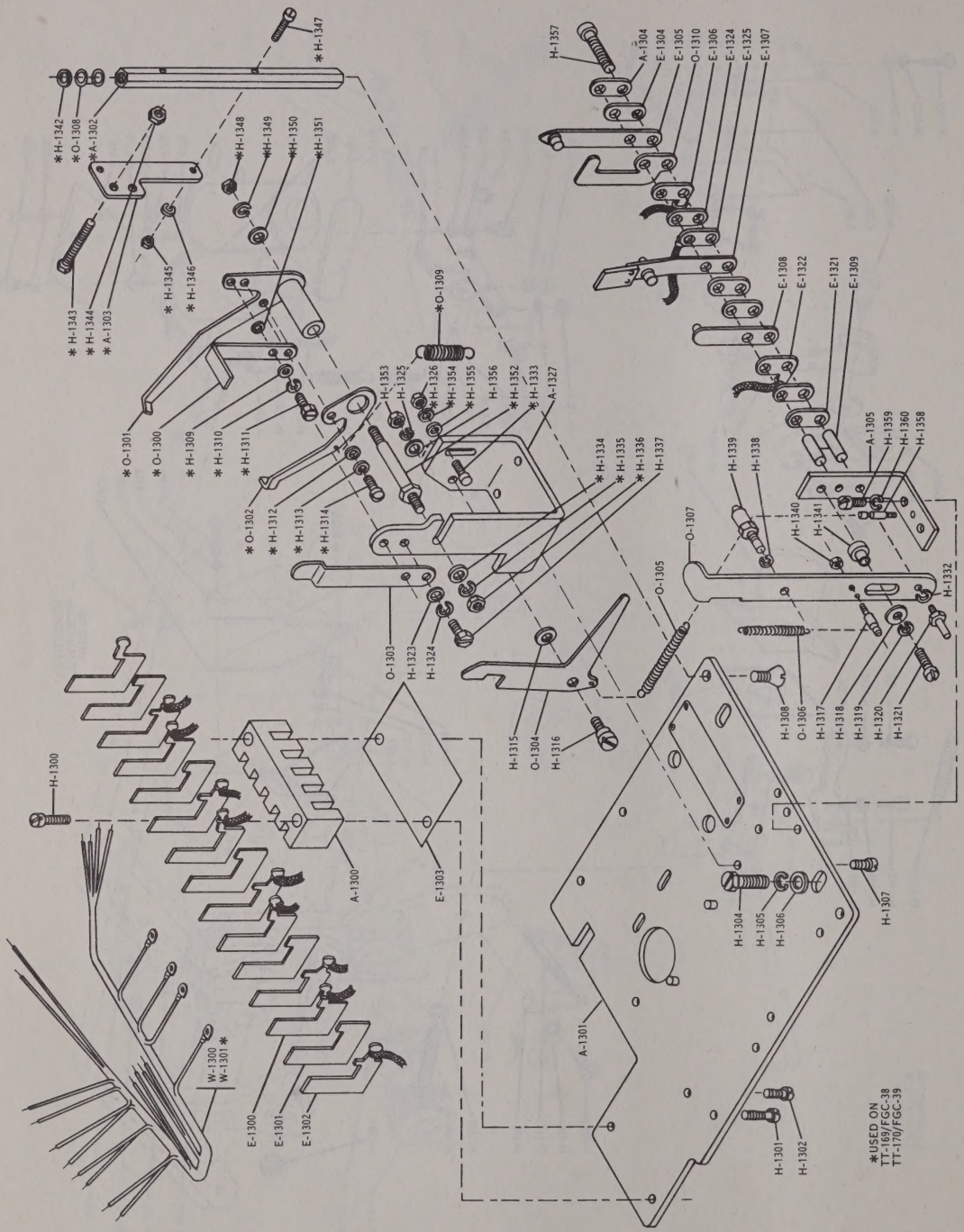

Figure 7—170. Distributor-Transmitter Base Assembly

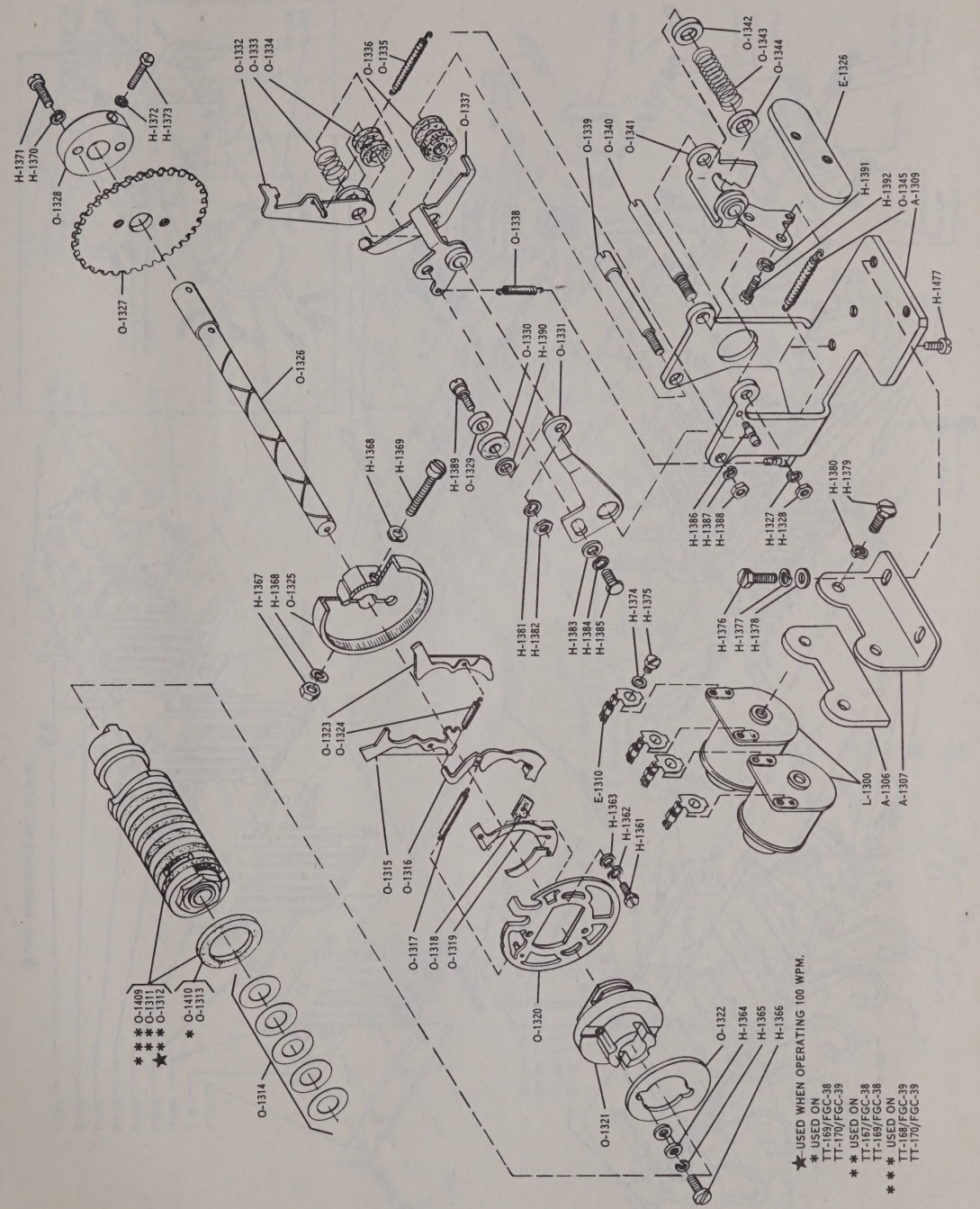

Figure 7—171. Distributor-Transmitter Clutch and Camshaft Assemblies

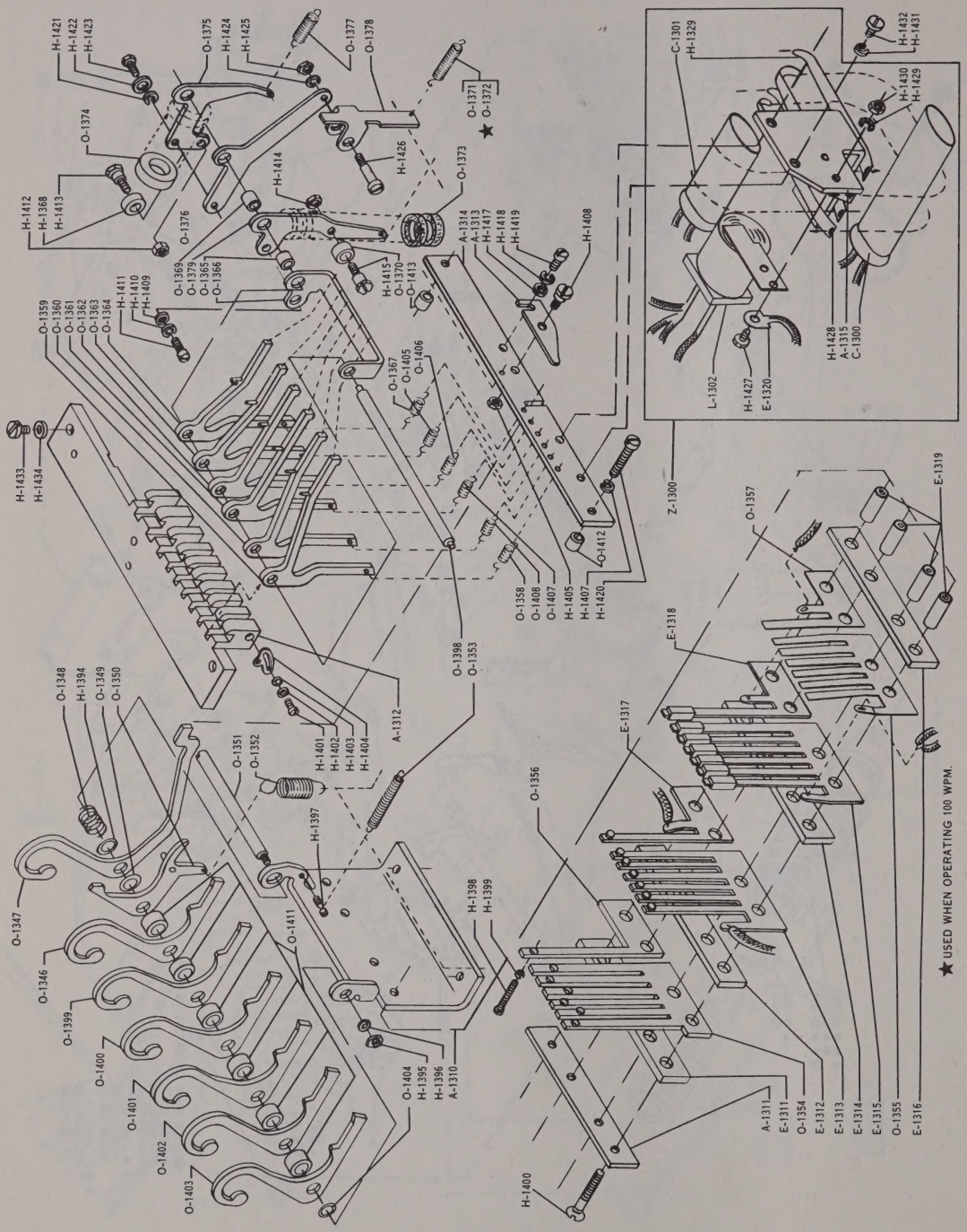

Figure 7—172. Distributor-Transmitter Selector Mechanism

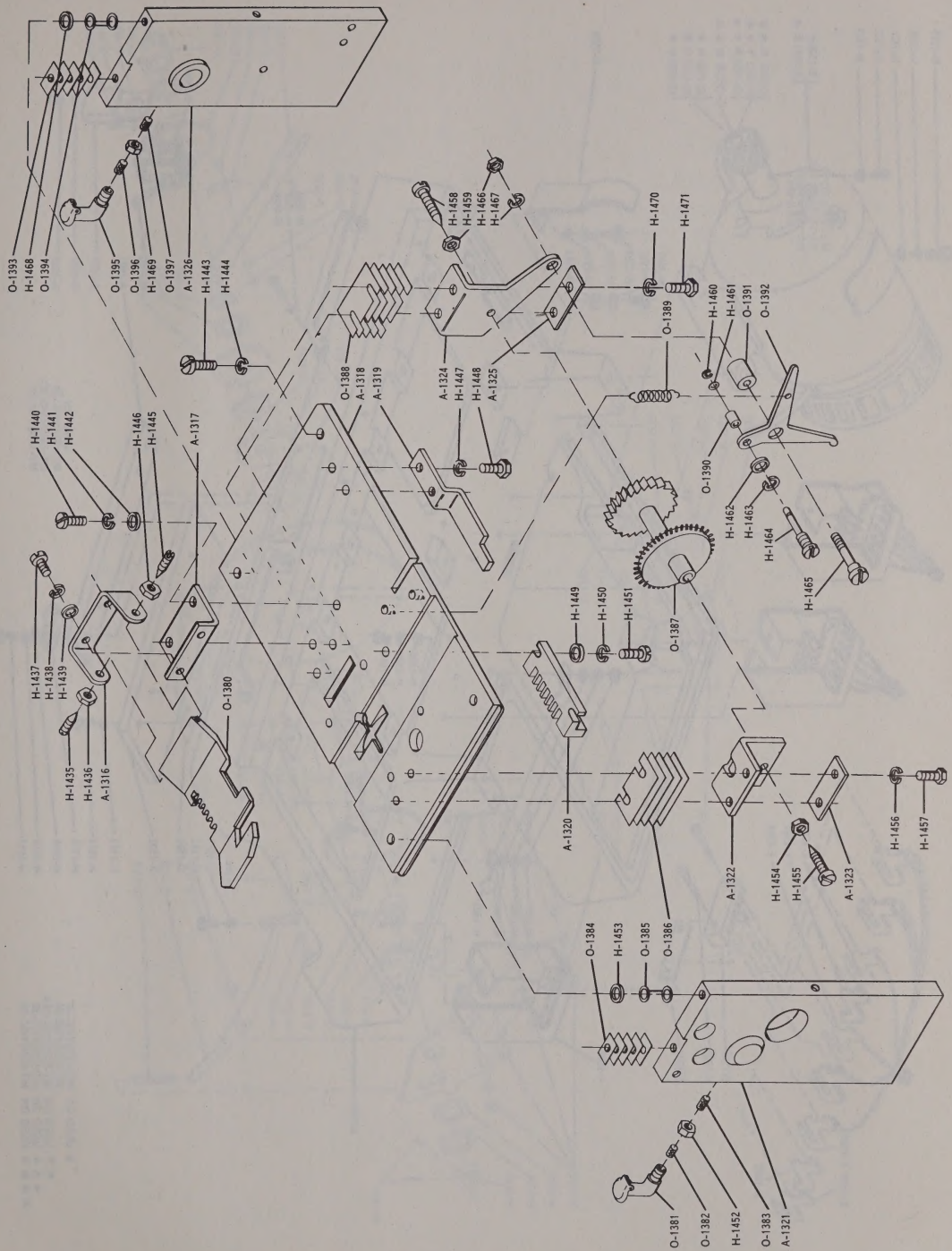

Figure 7—173. Distributor-Transmitter Top Plate and Side Post Assemblies

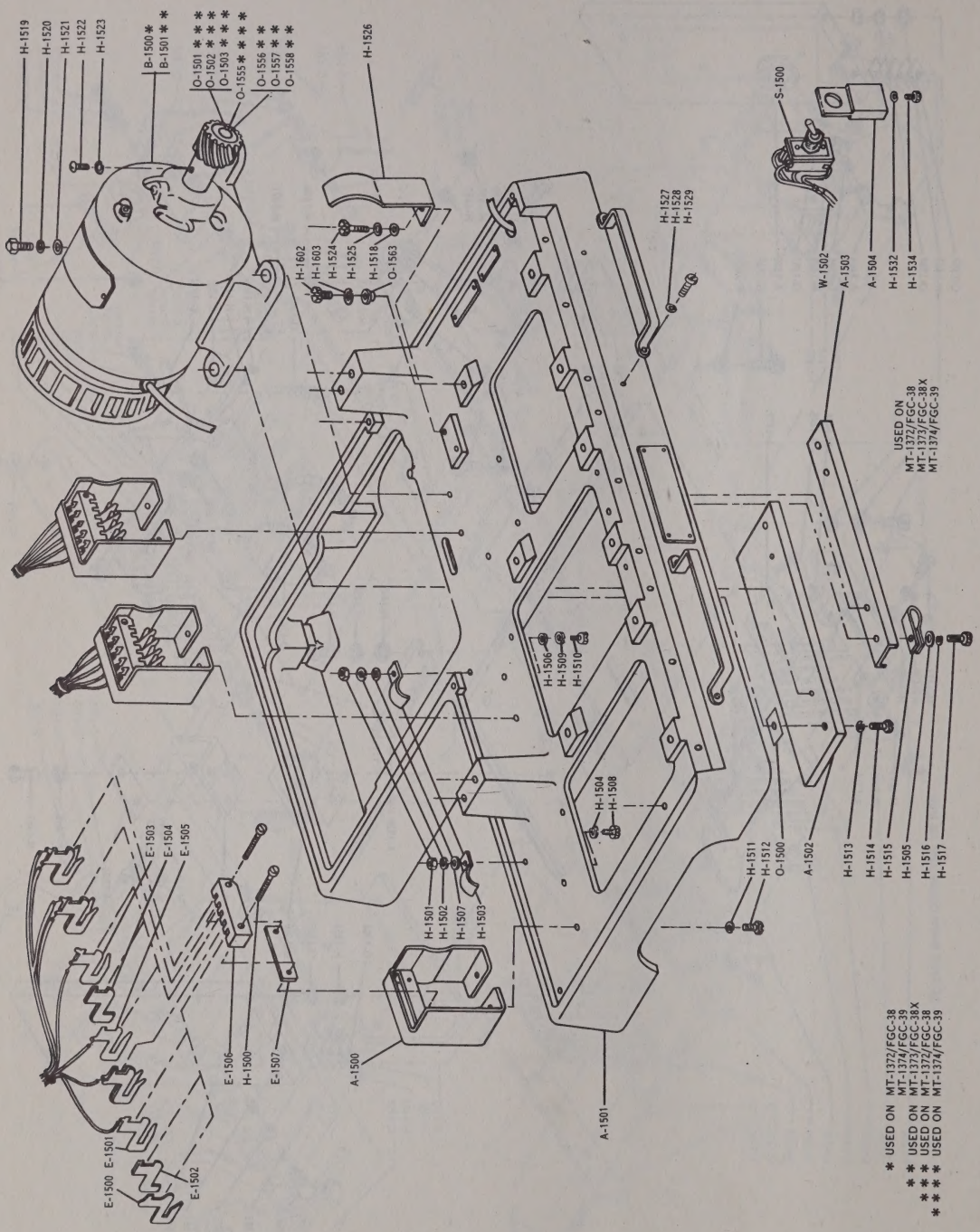

Figure 7—174. Numbering Base Casting Assembly

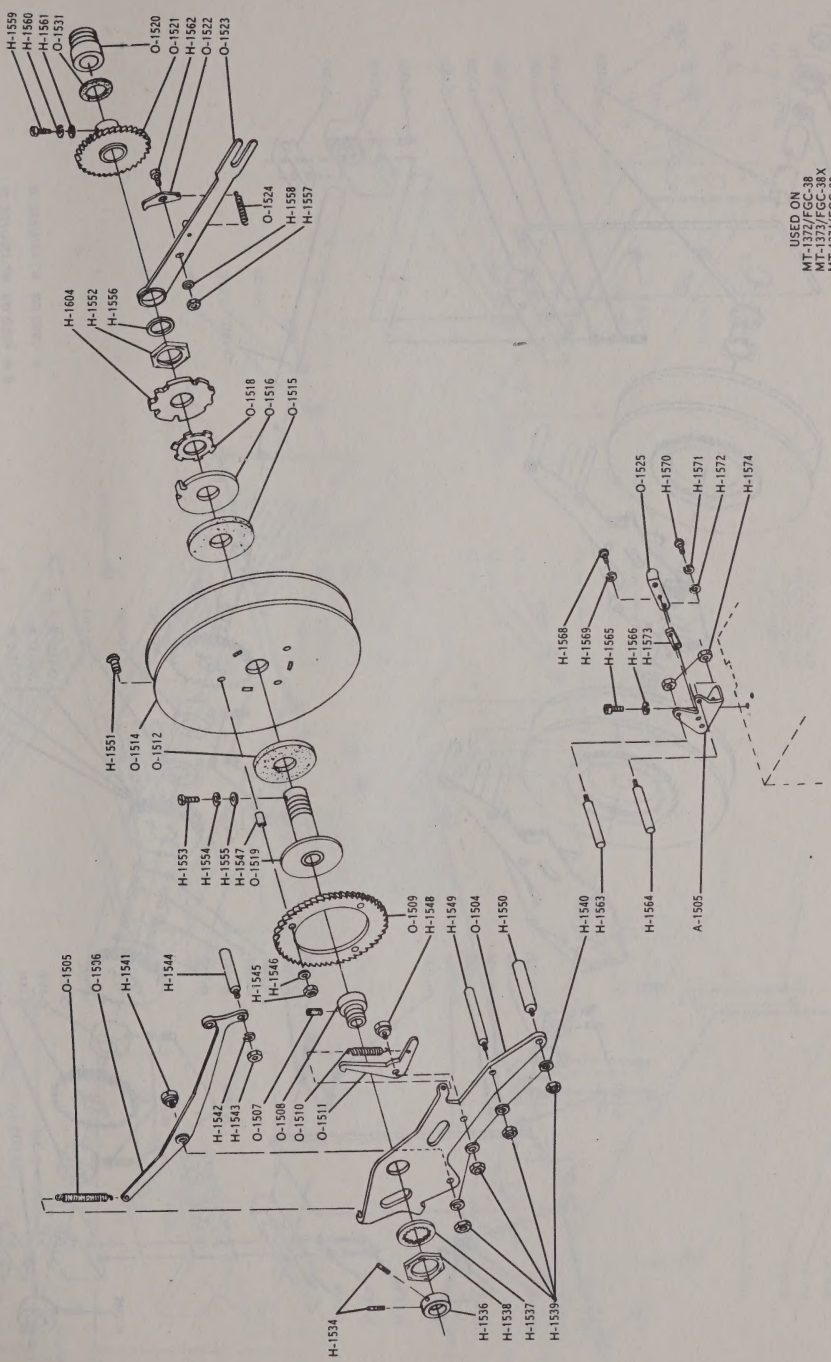

Figure 7—175. Numbering Base Take-up Reel Assembly

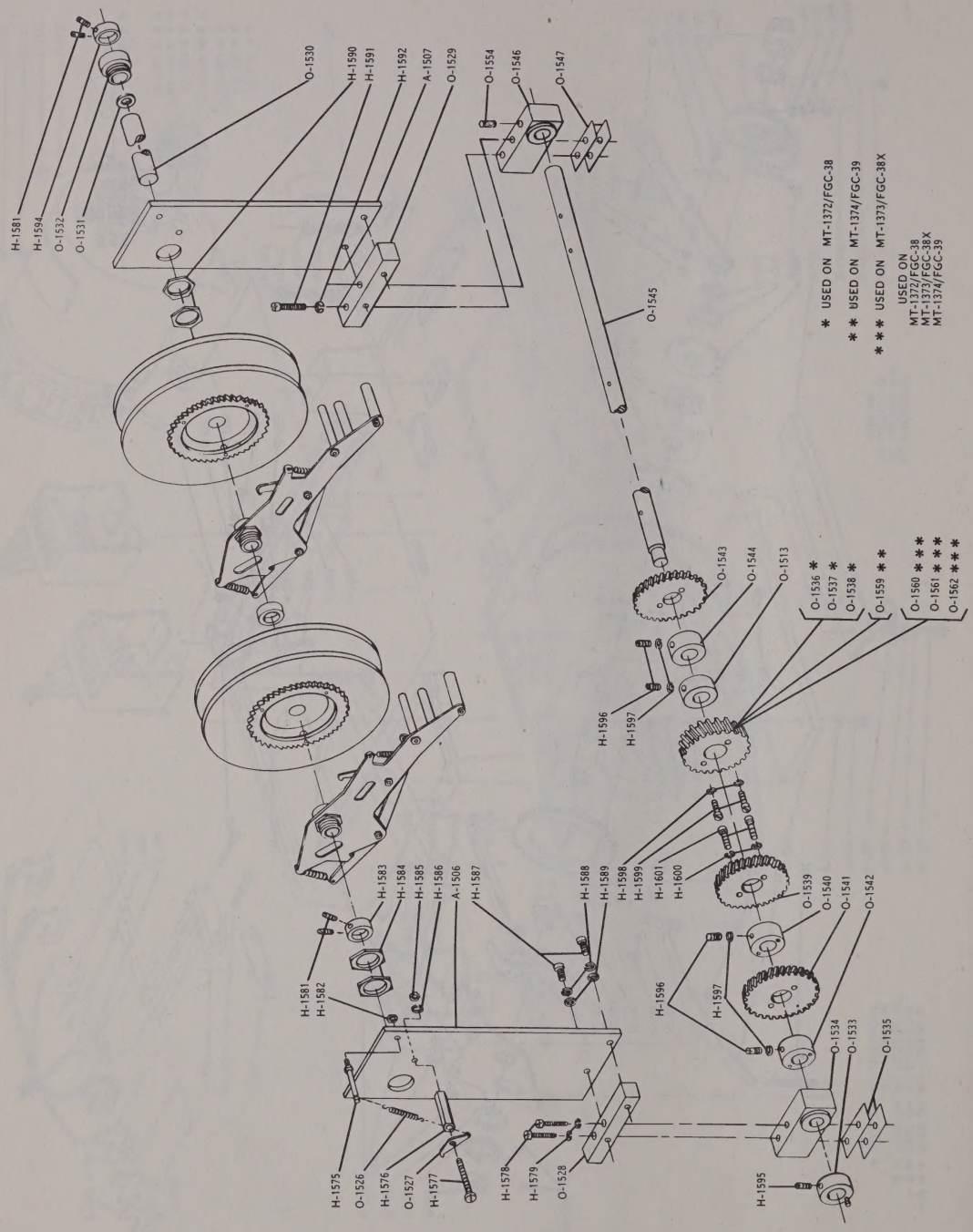

Figure 7—176. Numbering Base Take-up Reels and Drive Shaft Assembly

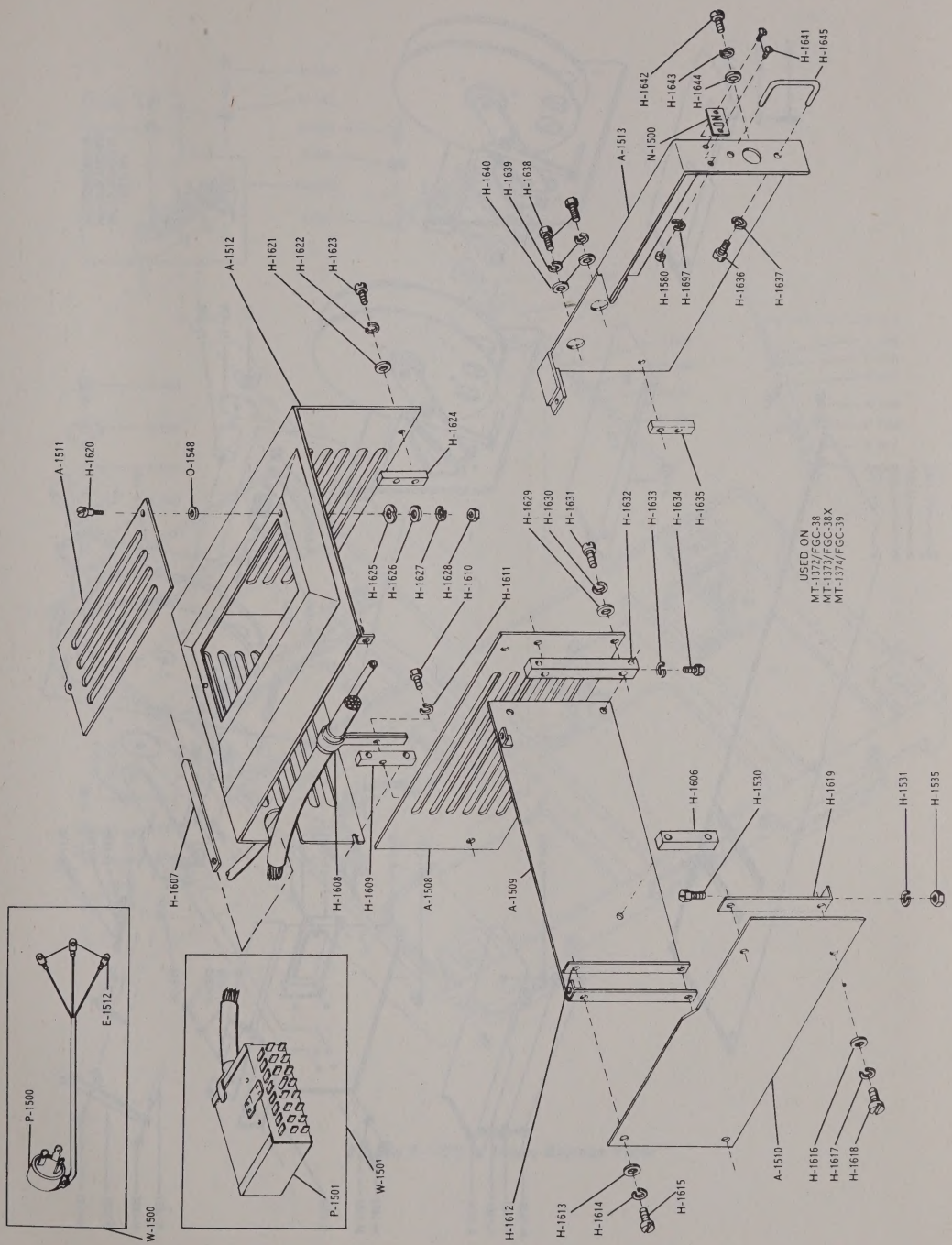

Figure 7--177. Numbering Base Covers

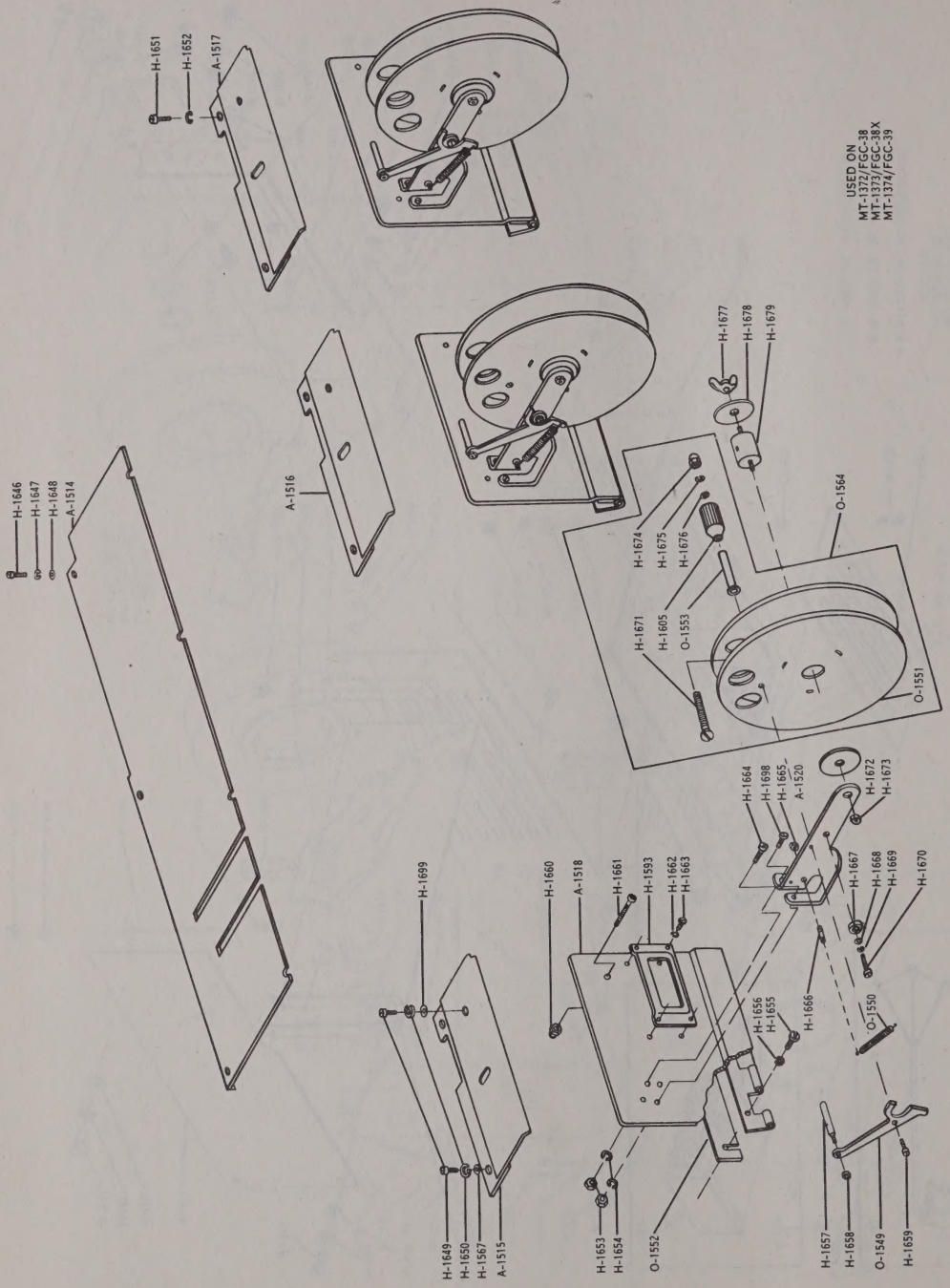

Figure 7—178. Numbering Base Rewind Reel Assembly

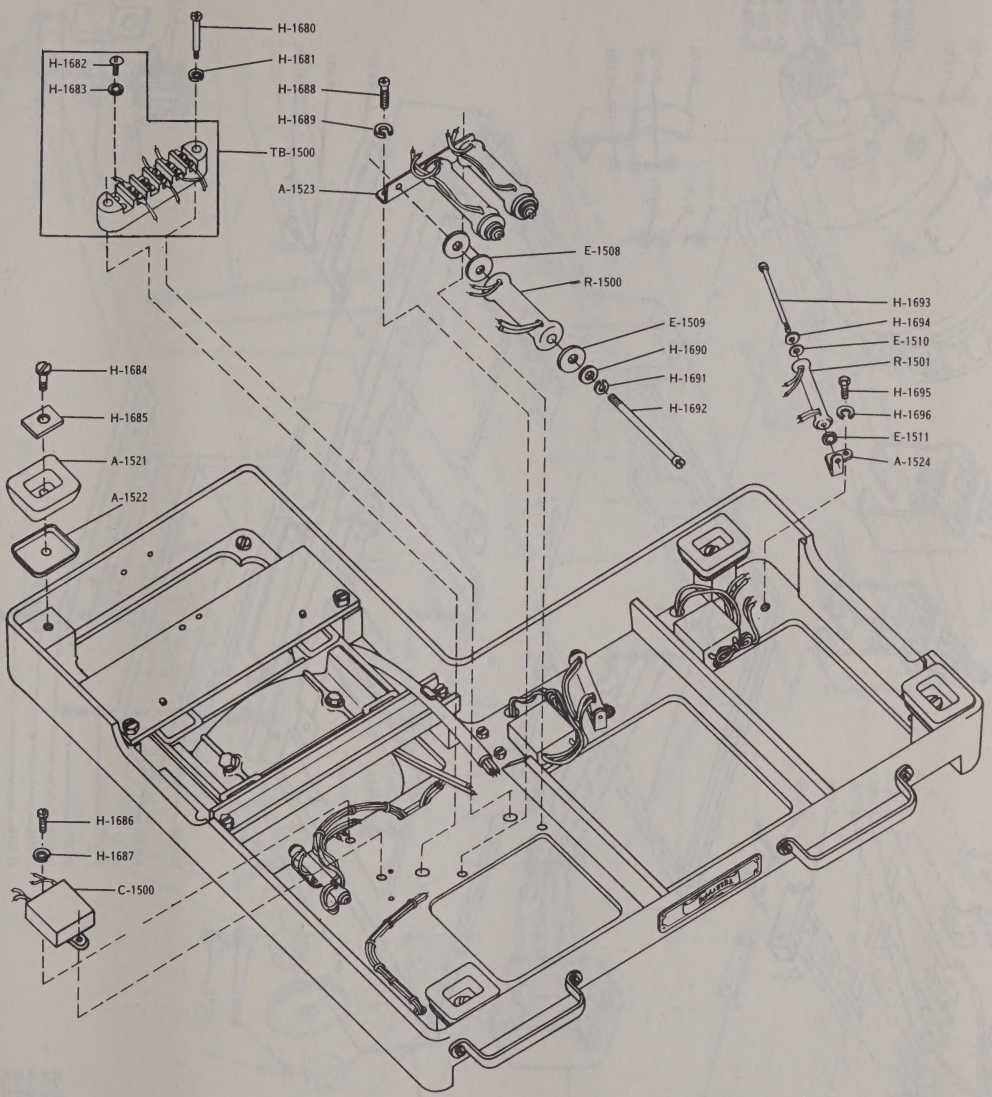

Figure 7—179. Base, Bottom View

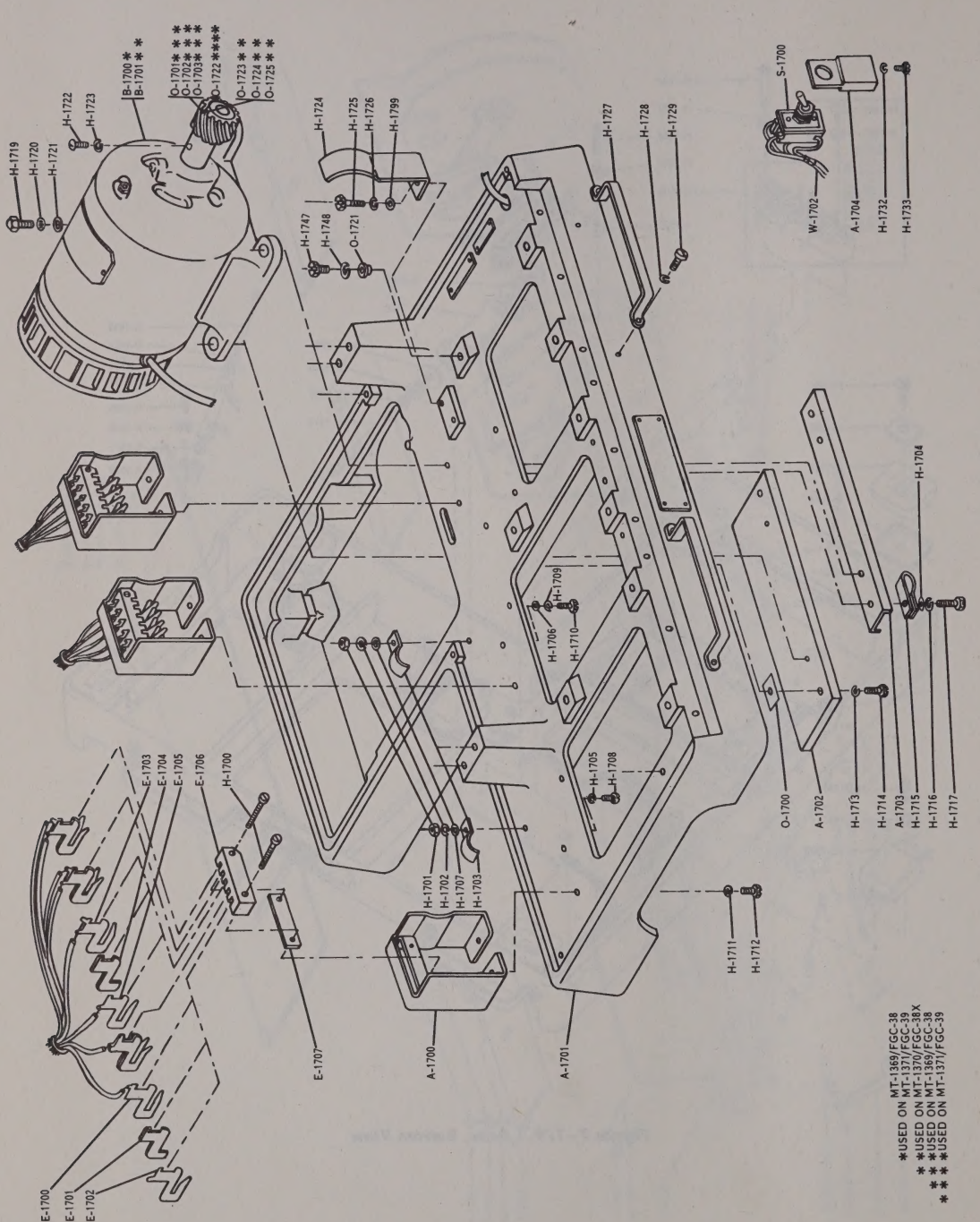

Figure 7—180. Message Base Casting, Top

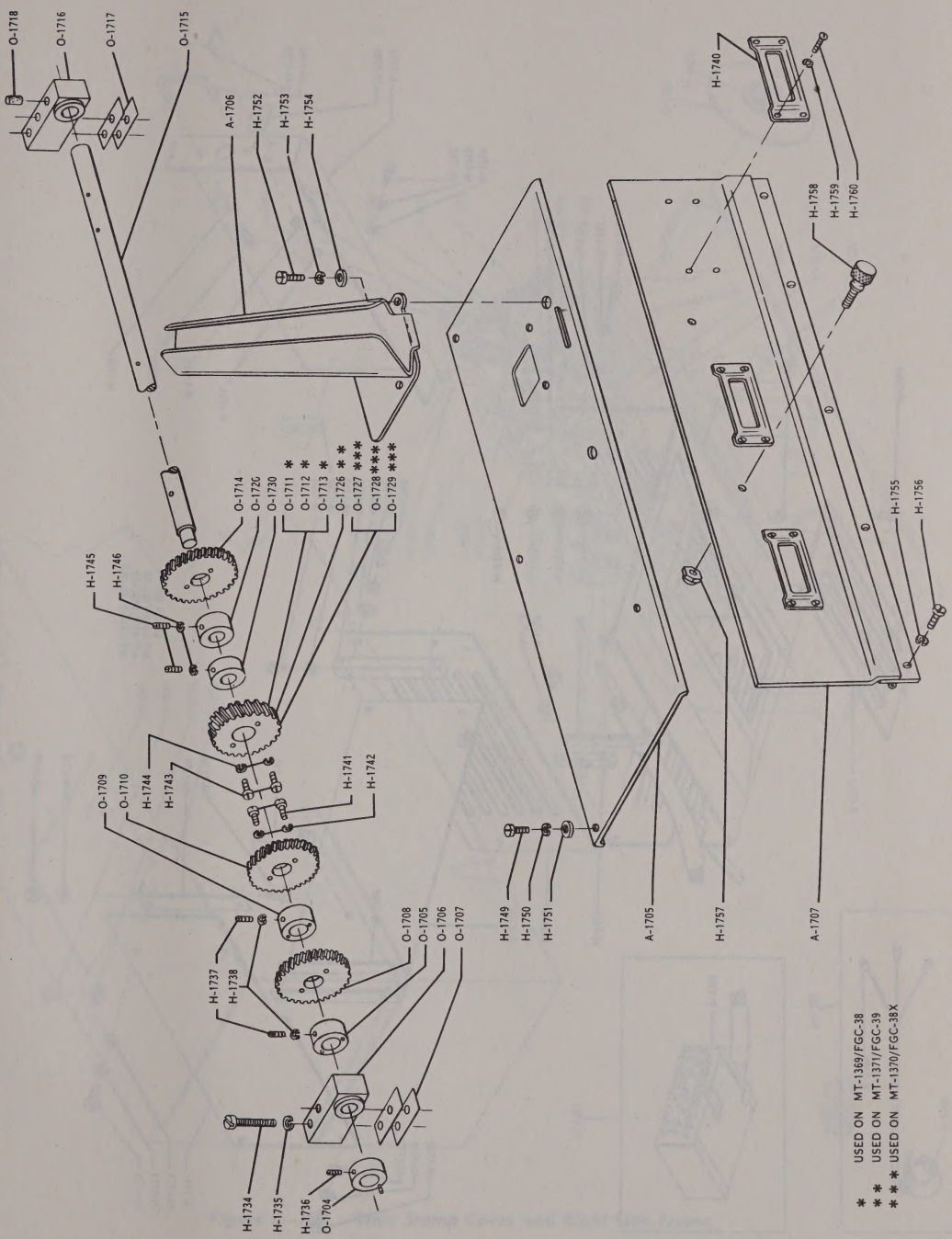

Figure 7—181. Message Base, Drive Shaft and Cover Assemblies

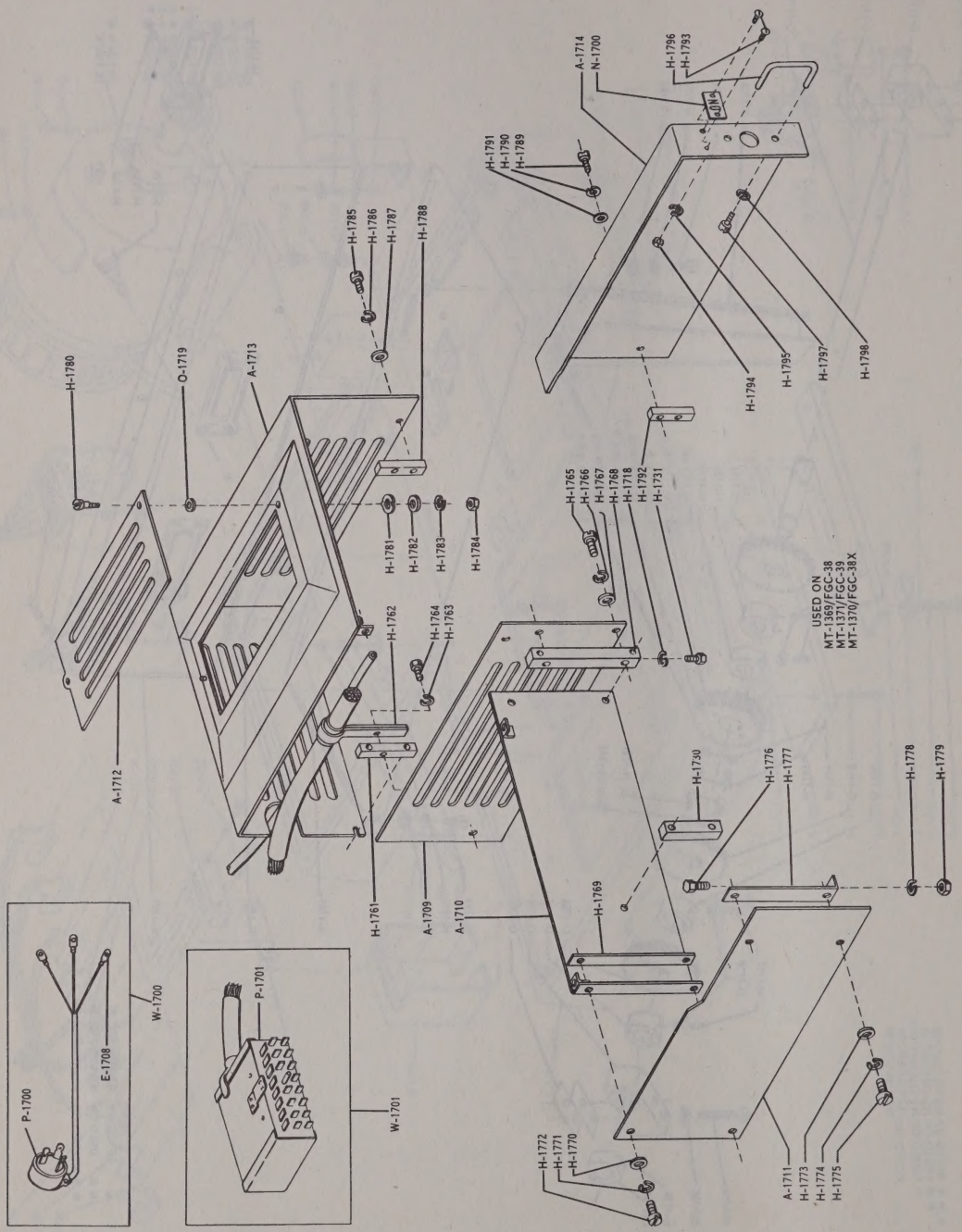

Figure 7—182. Message Base, Covers

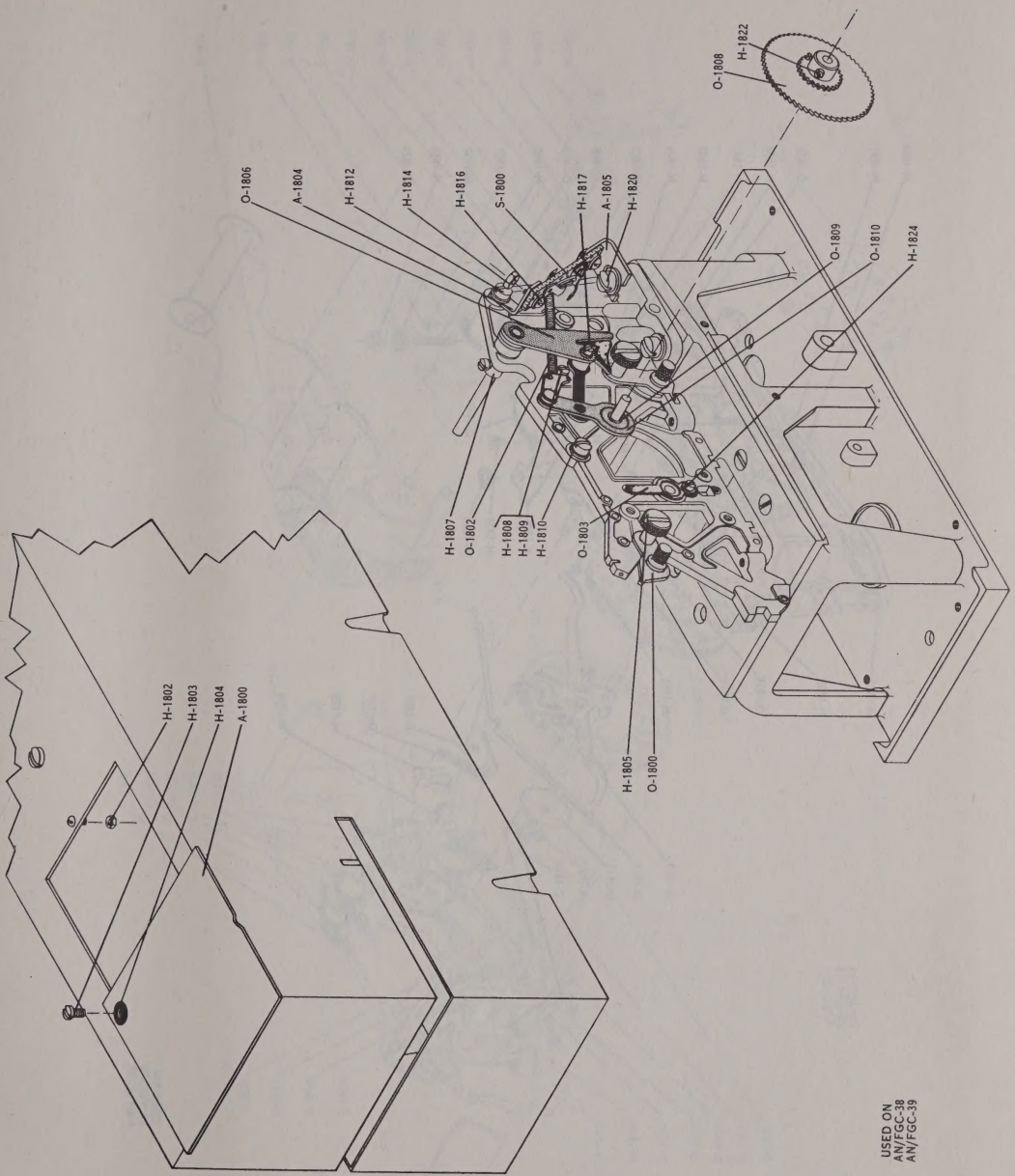

Figure 7—183. Time Stamp Cover and Right Side Frame

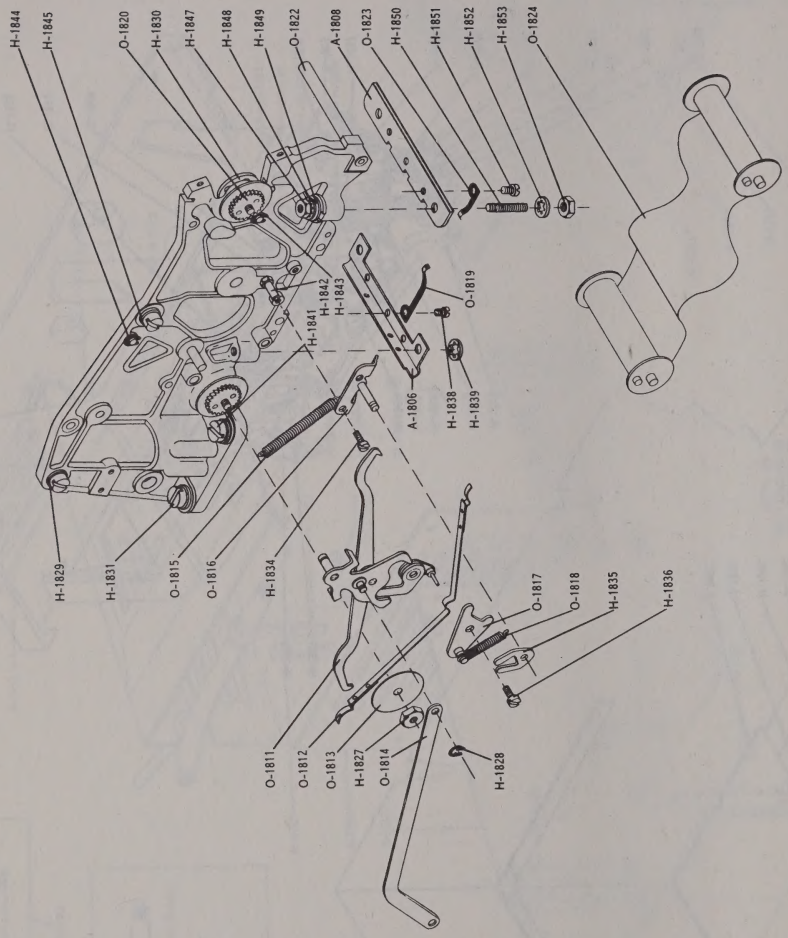

Figure 7—184. Time Stamp, Left Side Frame

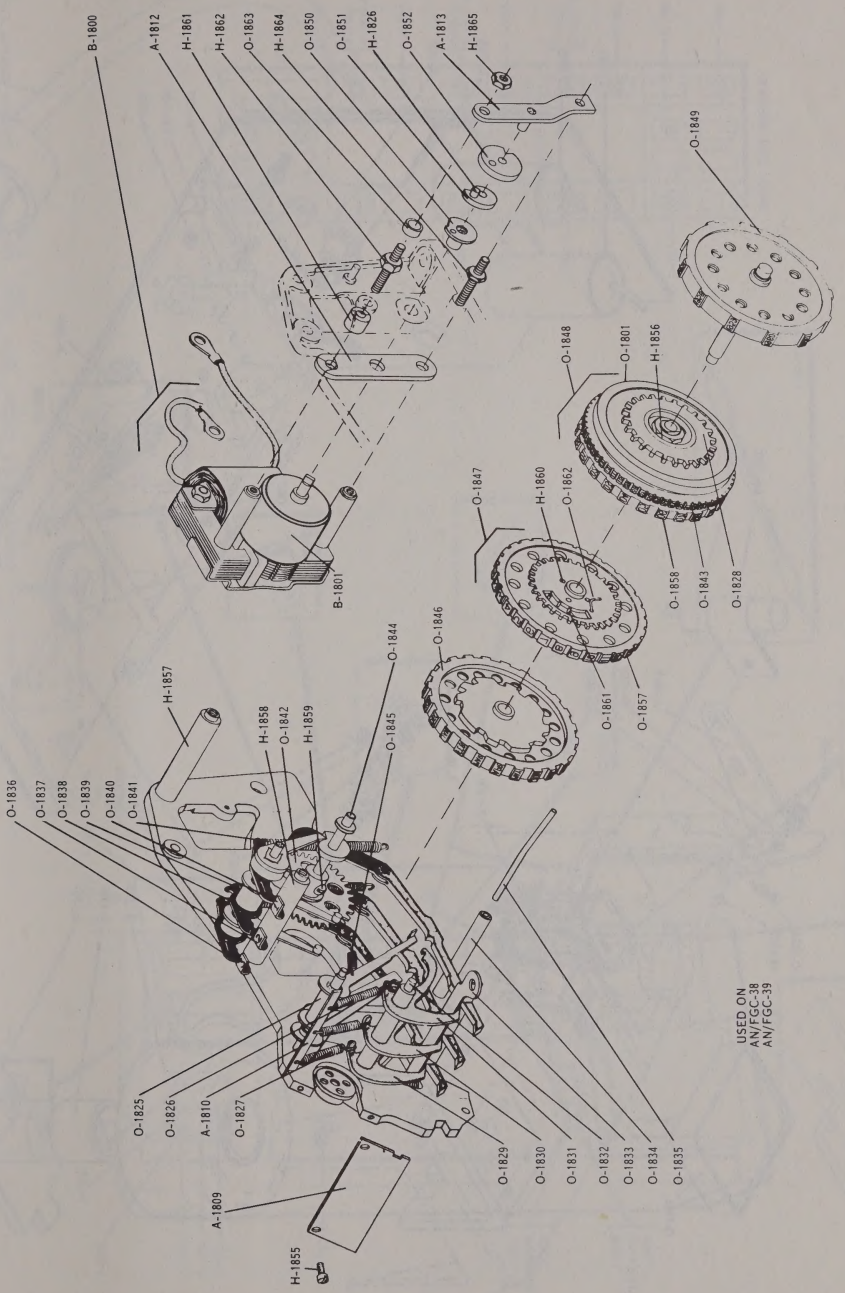

Figure 7—185. Time Stamp, Typewheels

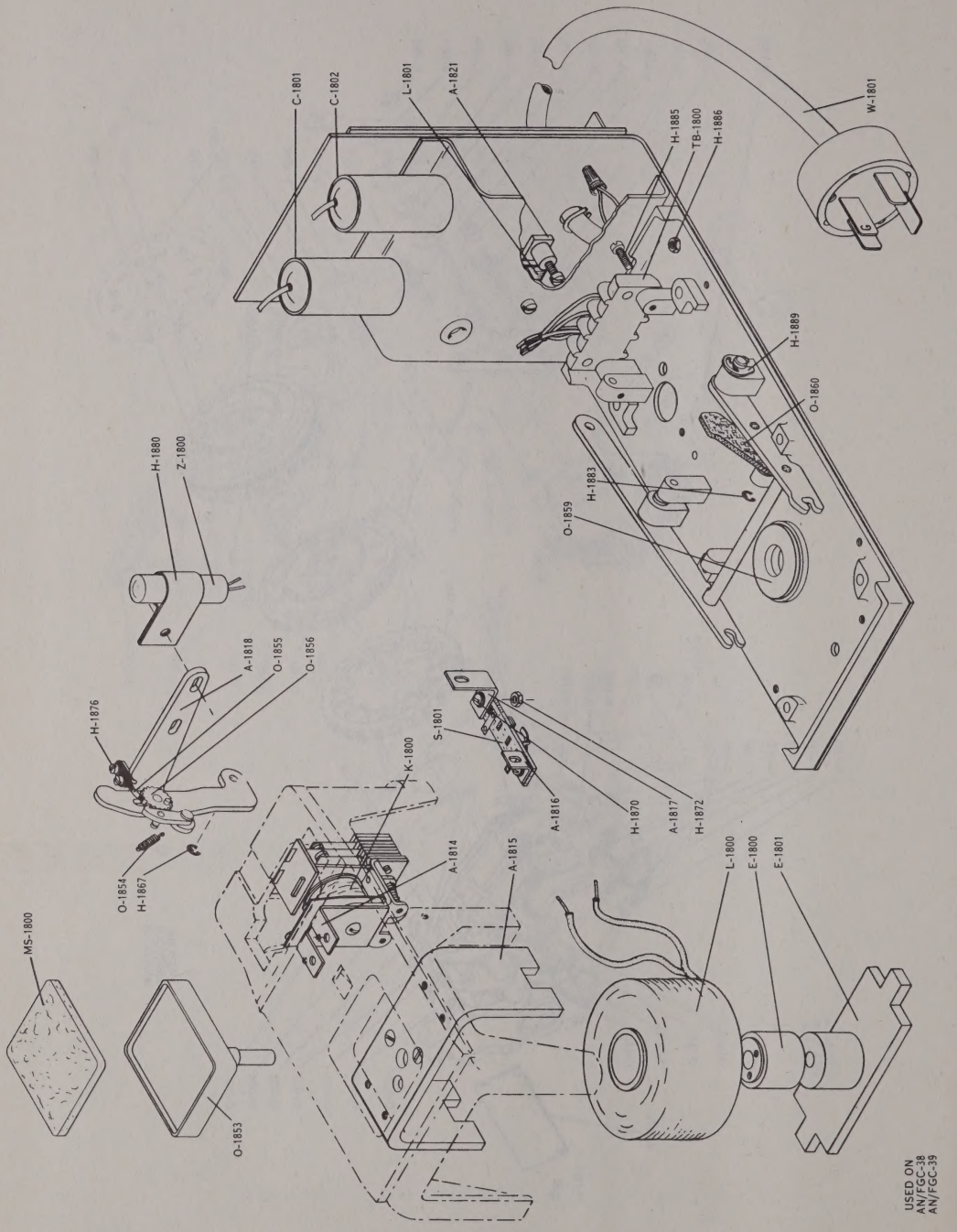

Figure 7—186. Time Stamp, Lower Base

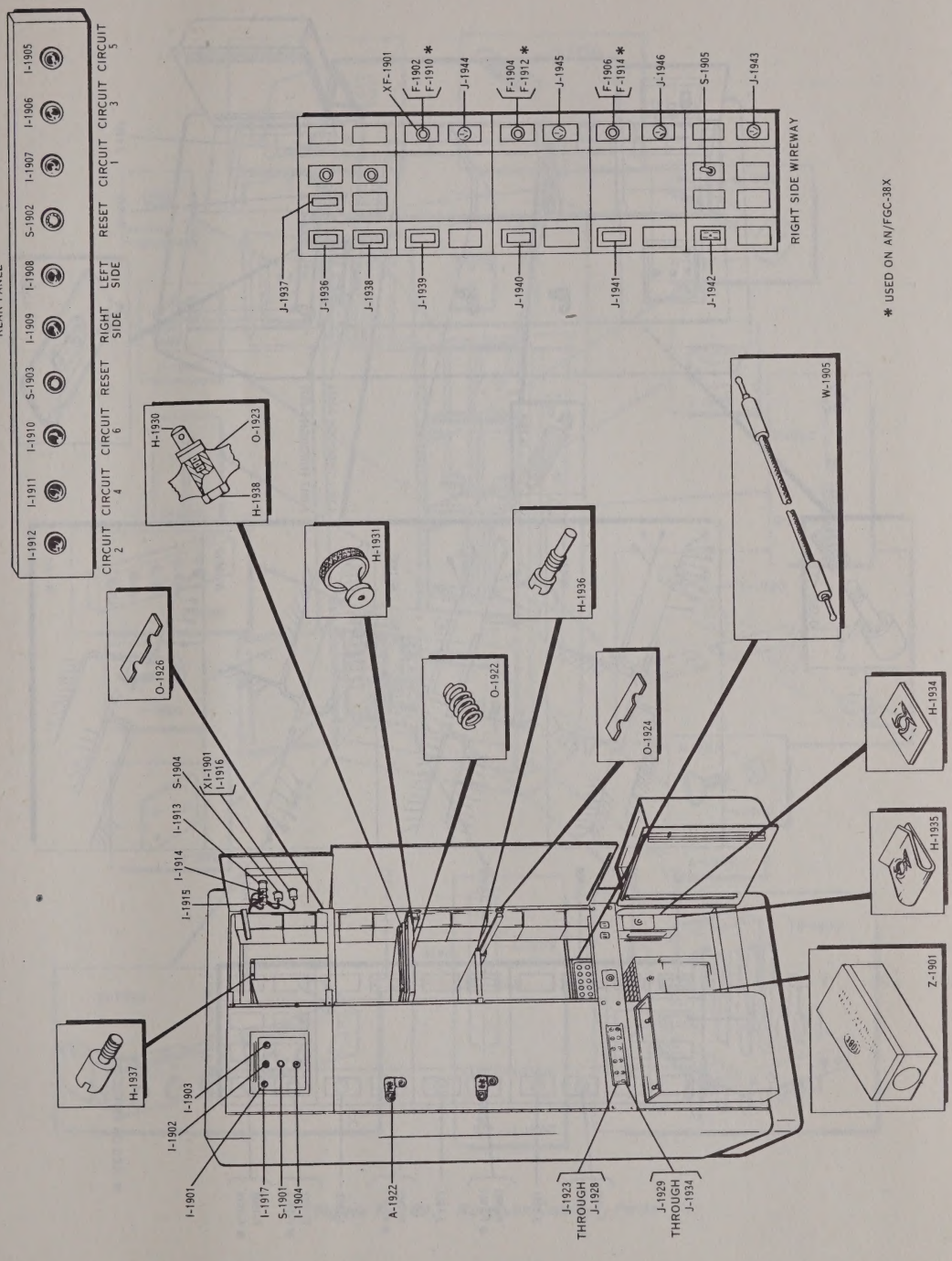

Figure 7—187. Receiver Cabinet, Parts

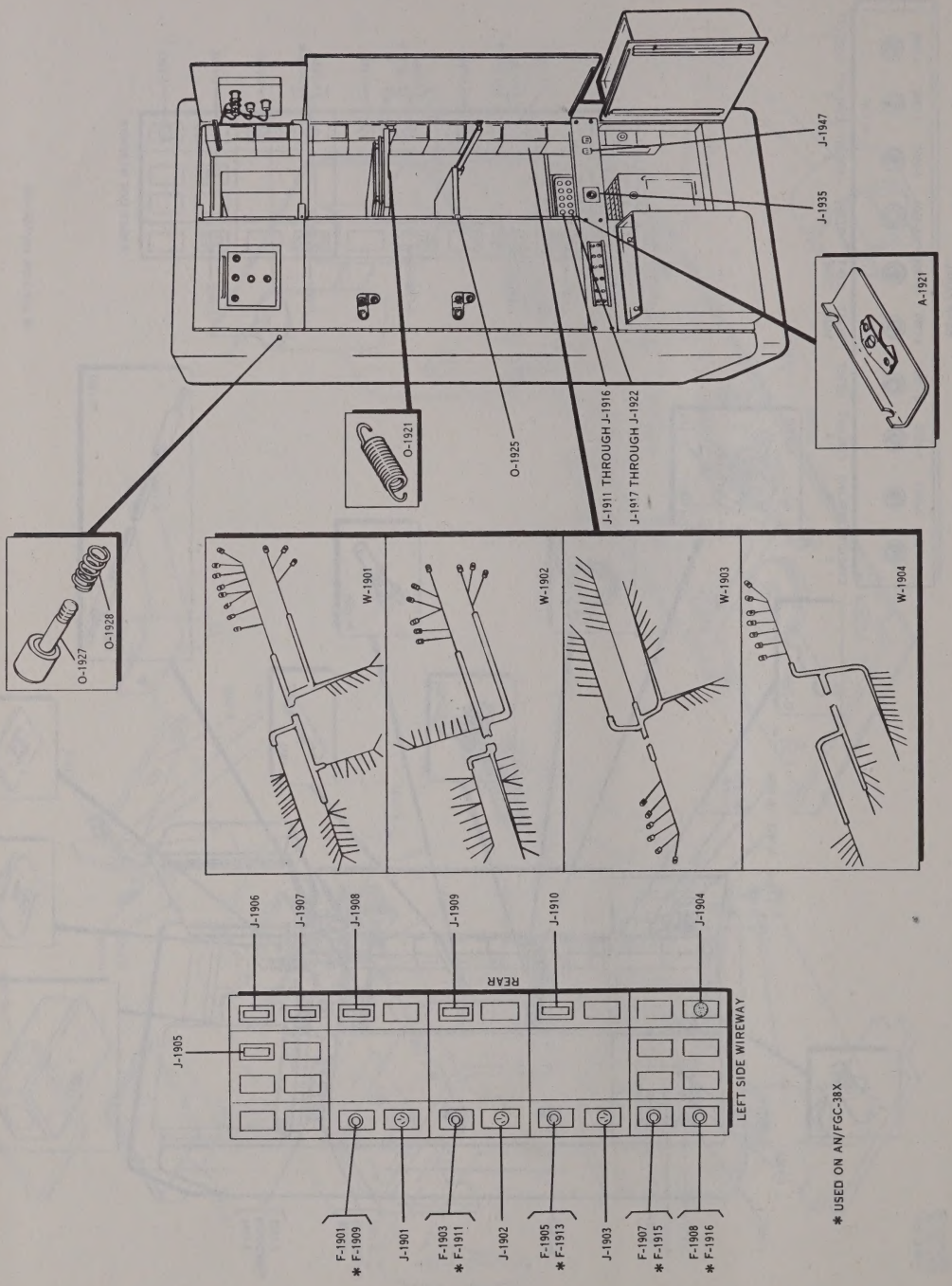

Figure 7—188. Receiver Cabinet, Parts

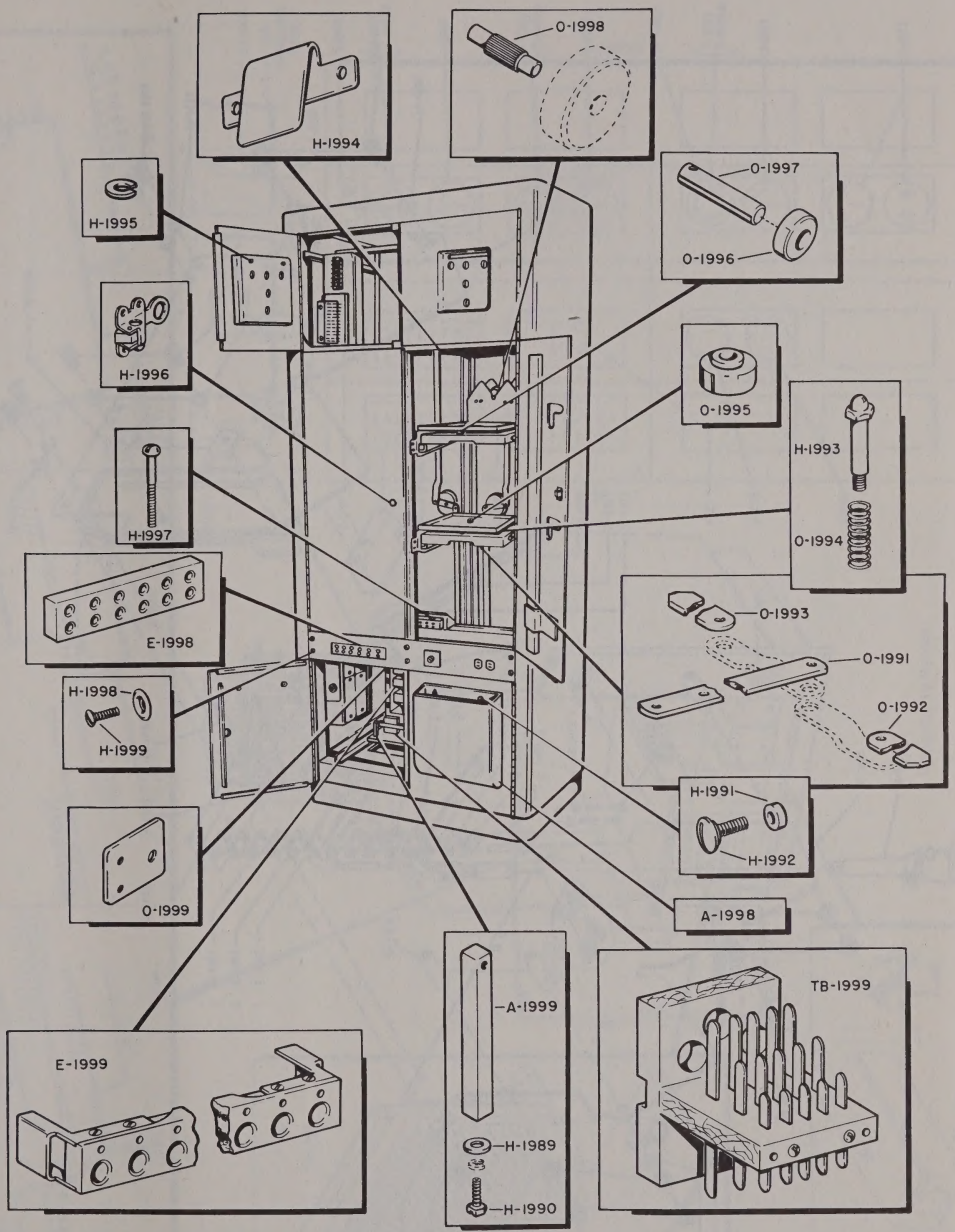

Figure 7—189. Receiver Cabinet, Parts

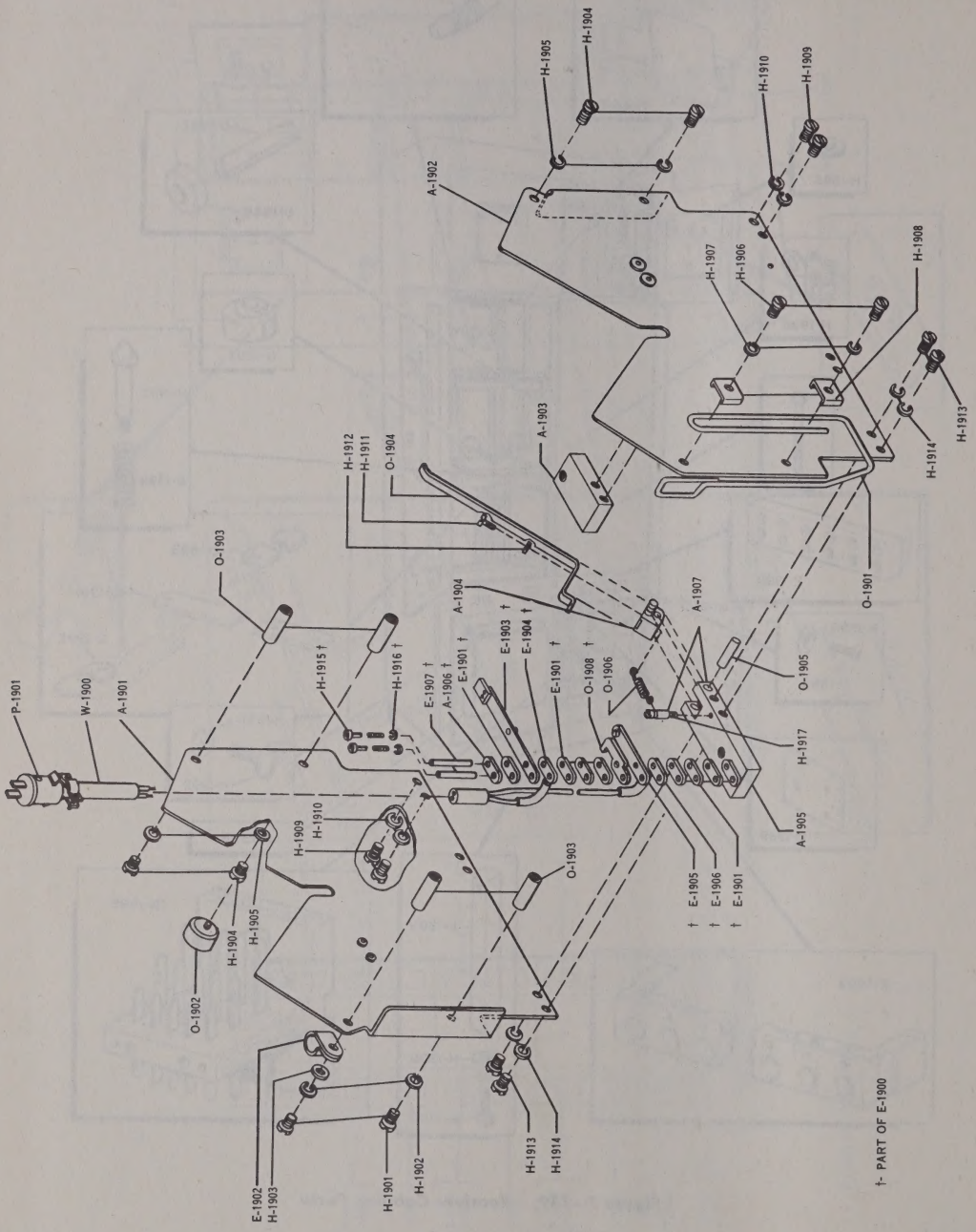

Figure 7–190. Receiver Reperforator Tape Container

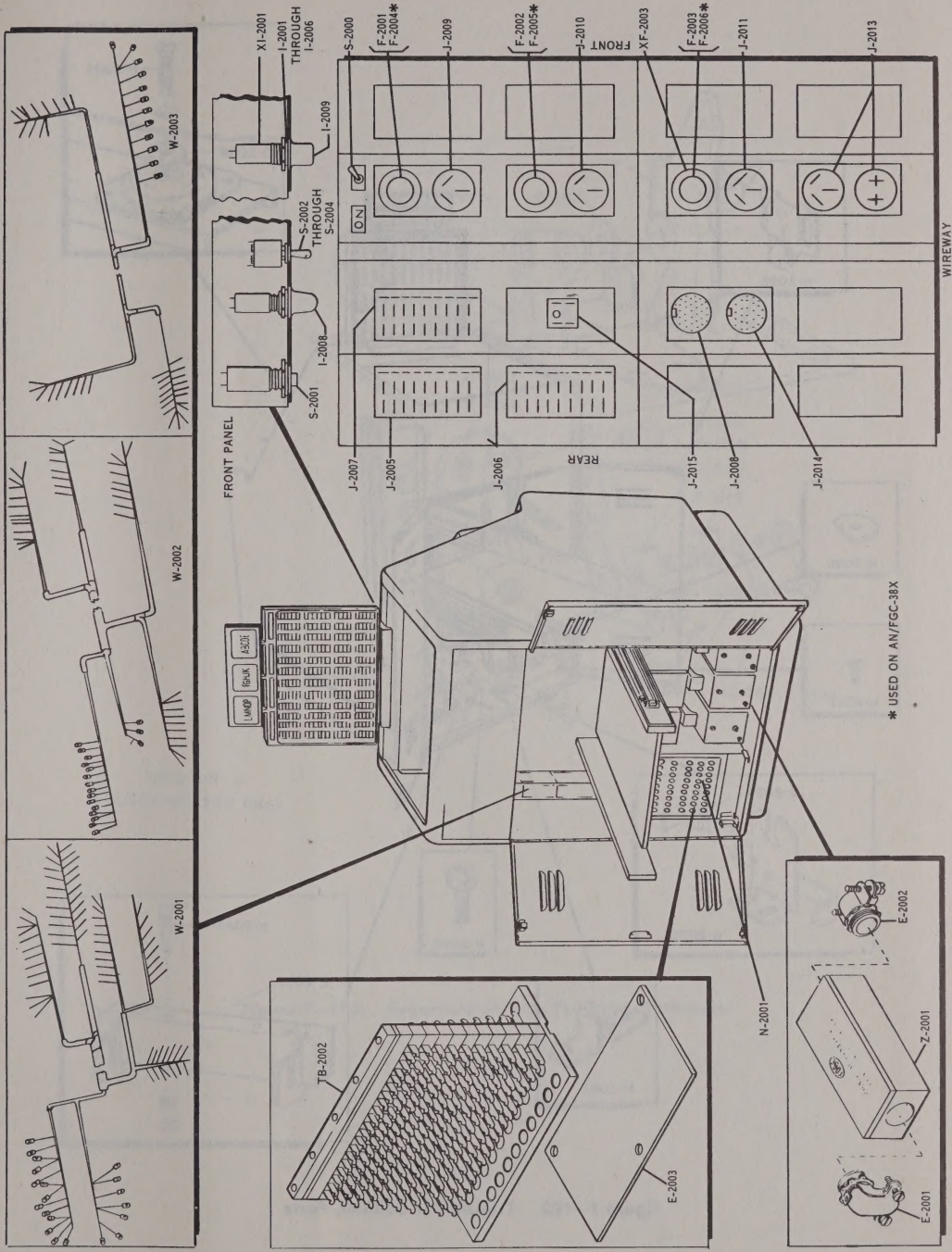

Figure 7—191. Transmitter Cabinet, Parts

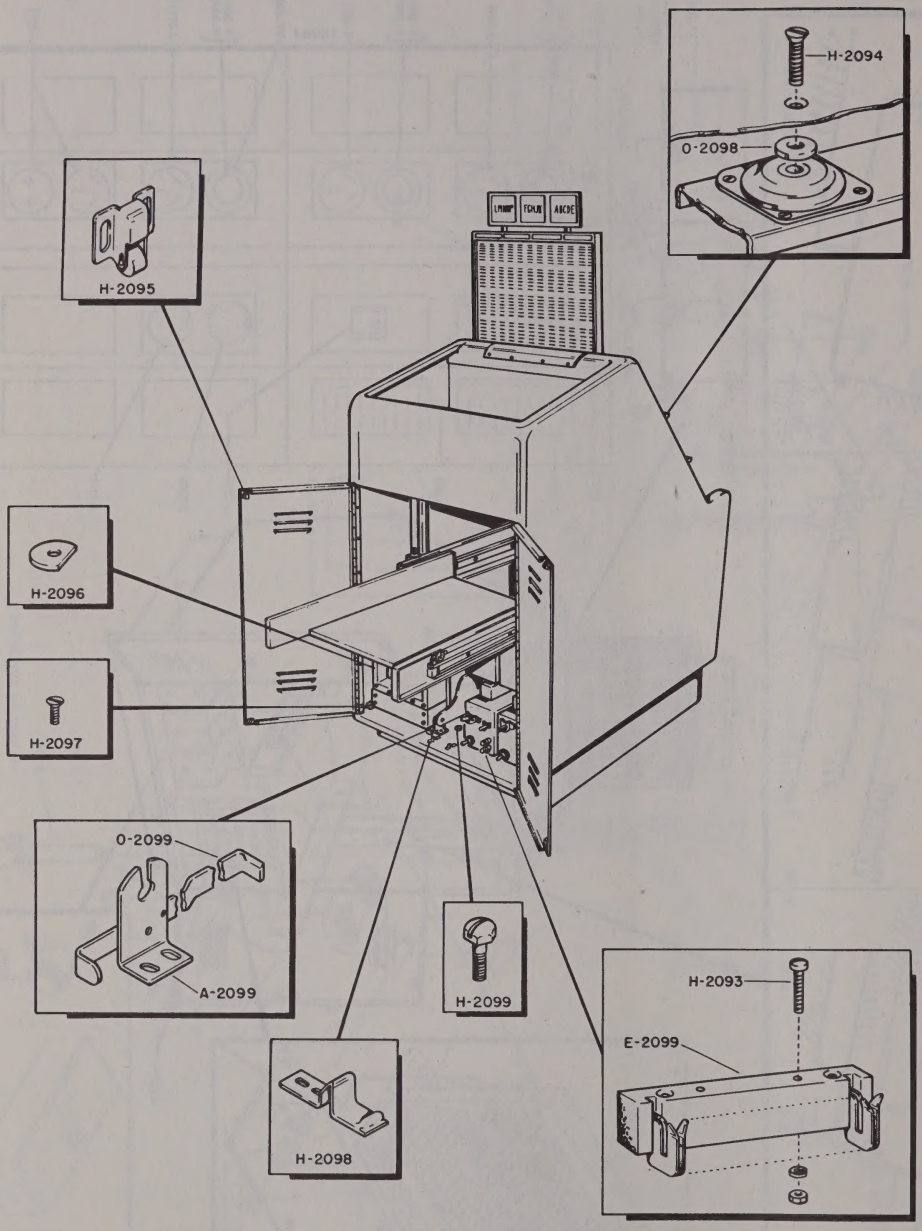

Figure 7—192. Transmitter Cabinet, Parts

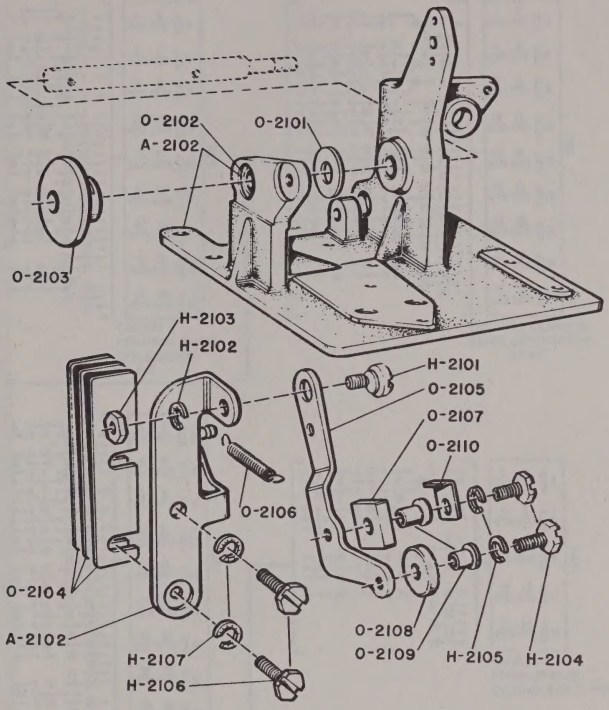

USED ON
TT-162/FGC-38X ONLY

Figure 7—193. Reperforator Tape Feed-out Mechanism

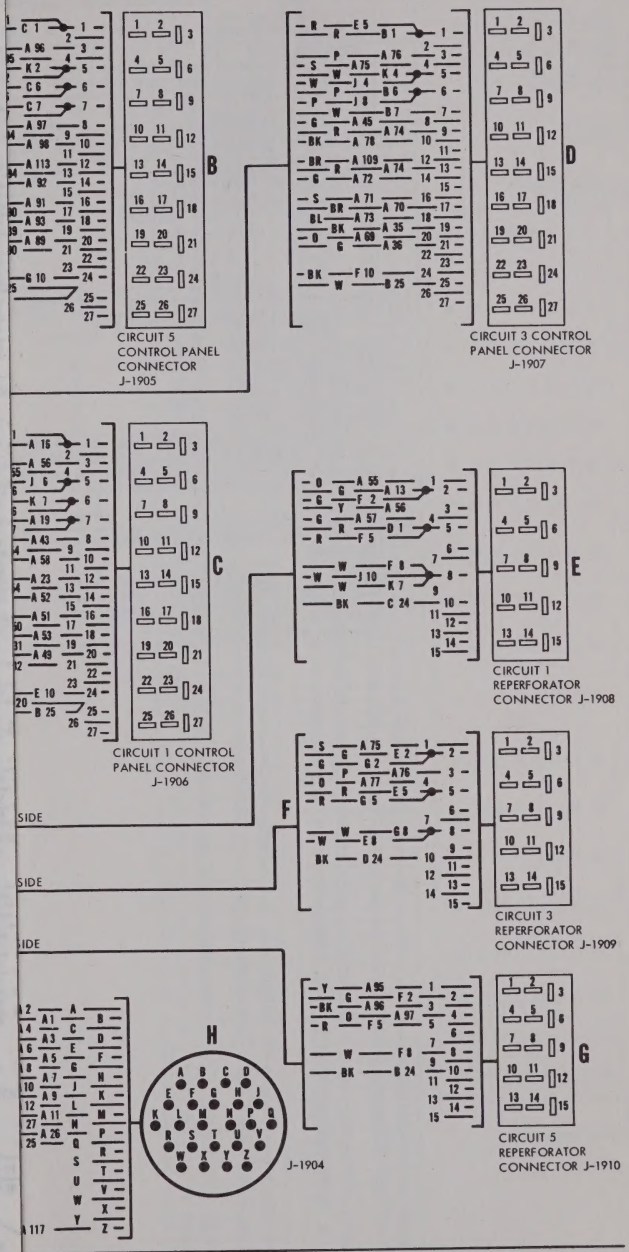

Figure 7—194. Receiver Cabinet CY-1523/FGC, Wiring Diagram

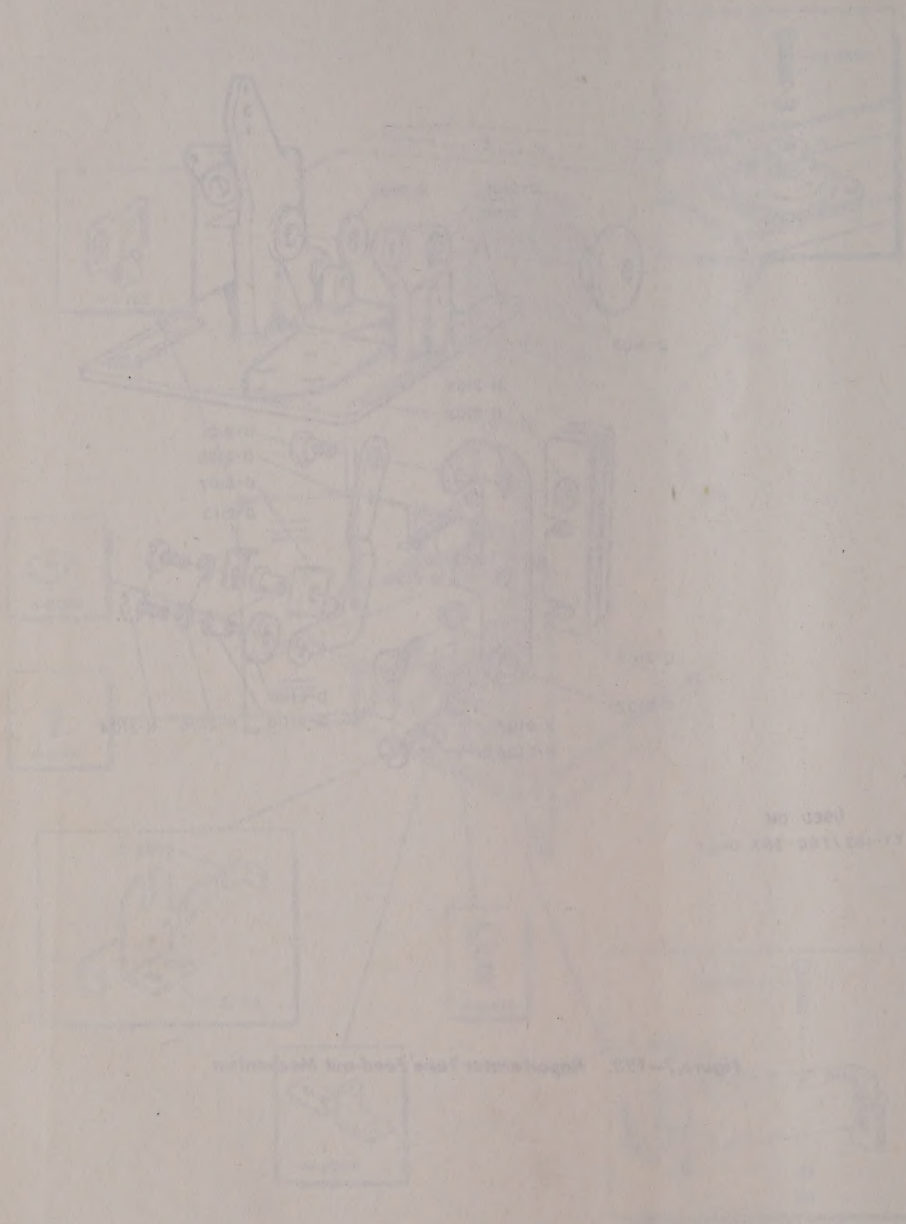

NAVSHIPS 92378 AN/FGC-38, AN/FGC-38X, AN/FGC-39
NAVSHIPS 92378 AN/FGC-38, AN/FGC-38X, AN/FGC-39

NO.	NOTES
1	LEADS CONNECTED TO LEFT SIDE OF 120-POINT TERMINAL BOARD - TB-1902
2	MOTOR POWER FUSETRON MOTOR — FUSETRON OR FUSTAT — FUSE PROTECTION ALTERNATE FUSE 115 V AC-60 CYCLE SYNC. — 3.2 AMP — 6 AMP 115 V AC-60 CYCLE GOV. — 1.6 AMP — 3 AMP
3	ASSOCIATED CABLES ———— AC POWER RIGHT SIDE W-1904 ———— CONTROL RIGHT SIDE W-1902 ———— AC POWER LEFT SIDE W-1903 ———— CONTROL LEFT SIDE W-1901 STRAPS ON JACKS AND TERMINAL BLOCKS; PLASTIC TUBING ON CABLE
4	COLOR CODED STRAPPING INCLUDED IN ASSOCIATED CABLE
5	STRAPPING INDICATED BY DOUBLE LINE (————) IS NOT INCLUDED IN FORMED CABLE
6	WIRE COLOR CODE AND SYMBOLS Y YELLOW — O ORANGE G GREEN — S SLATE BR BROWN — R RED P PURPLE — BK BLACK W WHITE — BL BLUE
7	FEMALE AND MALE CONNECTORS SHOWN FROM SLOT AND PRONG SIDES
8	ASSOCIATION OF JACKS LEVELS, AND CIRCUITS LEVEL — CIRCUIT — JACK NO. UPPER-LEFT SIDE — 1 — 1 UPPER-RIGHT SIDE — 2 — 2 MIDDLE-LEFT SIDE — 3 — 3 MIDDLE-RIGHT SIDE — 4 — 4 LOWER-LEFT SIDE — 5 — 5 LOWER-RIGHT SIDE — 6 — 6
9	ALL 6 CIRCUITS OF THIS CABINET ARE WIRED FOR AUTOMATIC TAPE FEED OUT. TO CONVERT ANY ONE CIRCUIT TO MANUAL TAPE FEED OUT, REMOVE THE FOLLOWING STRAP FROM THE RIGHT HAND SIDE OF THE 120 POINT TERMINAL BOARD TB-101 CIRCUIT: 1 2 3 4 5 6 TERMINALS: 56 TO 57 66 TO 67 76 TO 77 86 TO 87 96 TO 97 106 TO 107
10	FOR SPARE TYPING REPERFORATOR STRAP THE FOLLOWING TERMINALS CIRCUIT: 1 2 3 4 5 6 TERMINALS: 23 TO 24 29 TO 30 109 TO 110 111 TO 112 113 TO 114 115 TO 116 CIRCUIT 4 IN THIS CABINET IS WIRED AS THE SPARE REPERFORATOR
11	LAMP SOCKETS INCLUDE A 30,000 OHM RESISTOR. CONNECT RESISTOR TO COMMON

TERMINAL NUMBER	TERMINATING POINT		COLOR
1	P H	7 B	BK BK
2	P H	1 A	W W
3	P H	14 D	R R
4	P H	8 C	G G
5	P H	21 F	O O
6	P H	15 E	BL BL
7	P H	28 H	Y Y
8	P H	22 G	S S
9	P H	35 K	P P
10	P H	29 J	BR BR
11	P H	42 M	BK BK
12	P H	36 L	W W
13	E	2	G
14	Y	2	BL
15			
16	C	1	R
17	S	1	S
18	J L K	7 7 8	O O O
19	C	7	W
20	S	7	BK
21	M	G	R
22			
23	C	12	S
24	P	3	R
25	Q H	1 Q	R R
26	Q H	4 P	W W
27	Q H	5 N	BK BK
28			
29	S	12	BL
30	P	10	BL
31	C M	19 38	W W
32	C N	21 17	R R
33	M S	31 19	BR BR
34	N S	14 21	P P
35	D M	19 24	BK BK
36	D N	21 11	G G
37	M U	17 19	P P
38	N U	8 21	Y Y
39	B M	19 10	S S
40	B N	21 5	BL BL
41	M T	3 19	BR BR
42	N T	2 21	O O
43	C P	8 4	O O
44	P S	11 8	BK BK
45	D P	8 18	G G
46	P U	25 8	R R
47	B P	8 32	W W
48	P T	39 8	BL BL
49	C	20	BK
50	C	17	S
51	C	16	BR
52	C	14	W
53	C	18	G

TERMINAL NUMBER	TERMINATING POINT		COLOR
54	C C	9 13	Y Y
55	C E	4 1	O O
56	C E	3 3	Y Y
57	E	4	G
58	C	10	BK
59	S	20	S
60	S	17	O
61	S	16	W
62	S	14	R
63	S	18	BL
64	S S	9 13	G G
65	S V	4 1	BR BR
66	S V	3 3	P P
67	V	4	W
68	S	10	Y
69	D	20	O
70	D	17	BR
71	D	16	S
72	D	14	G
73	D	18	BL
74	D D	9 13	R R
75	D F	4 1	S S
76	D F	3 3	P P
77	F	4	O
78	D	10	BK
79	U	20	W
80	U	17	G
81	U	16	O
82	U	14	BL
83	U	18	R
84	U U	9 13	P P
85	U W	4 1	G G
86	U W	3 3	W W
87	W	4	P
88	U	10	R
89	B	20	O
90	B	17	BR
91	B	16	G
92	B	14	W
93	B	18	P
94	B B	9 13	R R
95	B G	4 1	Y Y
96	B G	3 3	BK BK
97	G	4	O
98	B	10	BK
99	T	20	BL
100	T	17	R
101	T	16	P
102	T	14	BR
103	T	18	G
104	T T	9 13	S S
105	T X	4 1	O O
106	T X	3 3	P P
107	X	4	BK
108	T	10	R
109	D	12	BR
110	P	17	BR
111	U	12	W
112	P	24	W
113	B	12	O
114	P	31	O
115	T	12	P
116	P	38	P
117	H	2	G
118			
119	J K L	1 5 1	BK BK BK
120	C S	25 25	W W

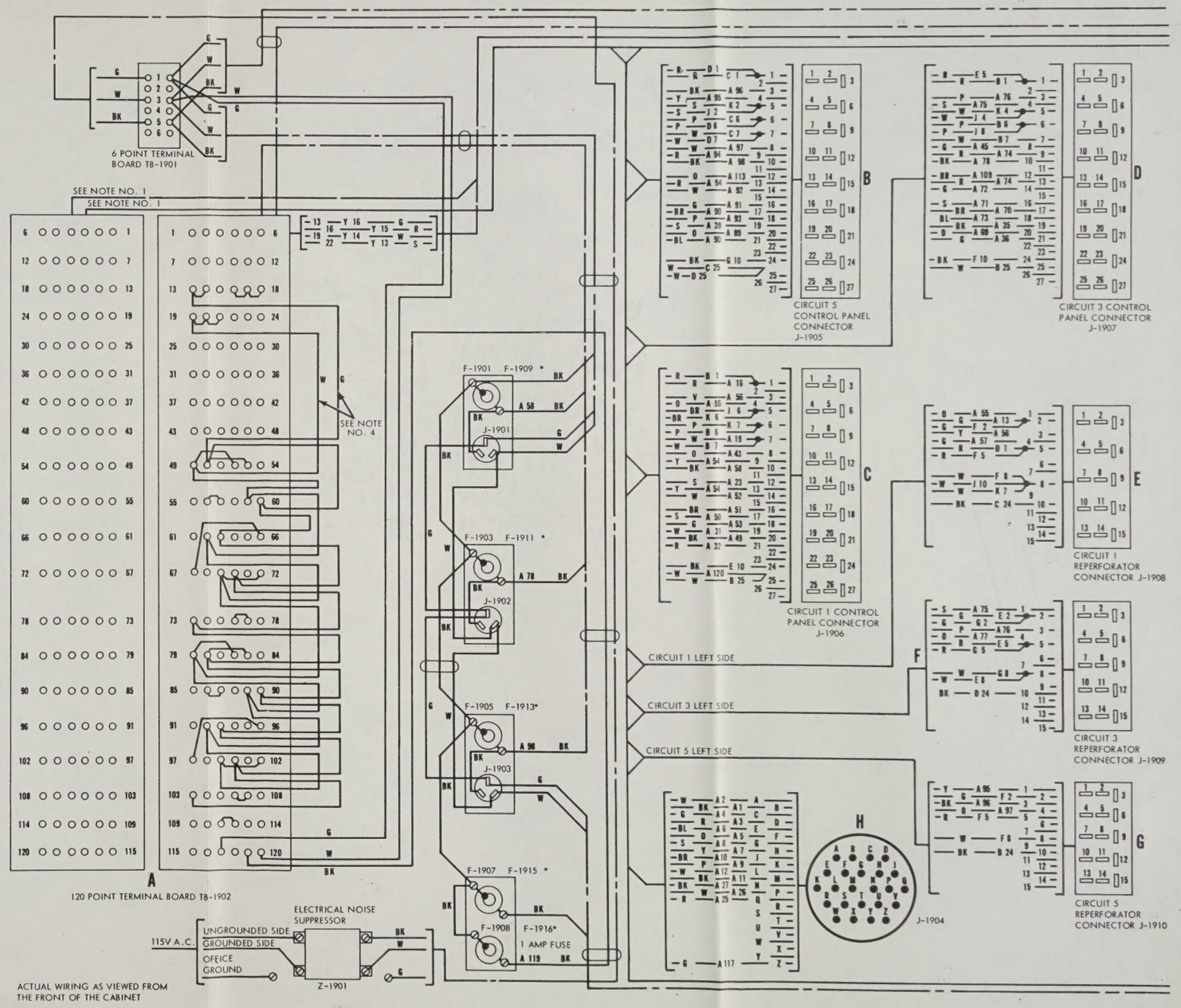

Figure 7—194. Receiver Cabinet CY-1523/FGC, Wiring Diagram

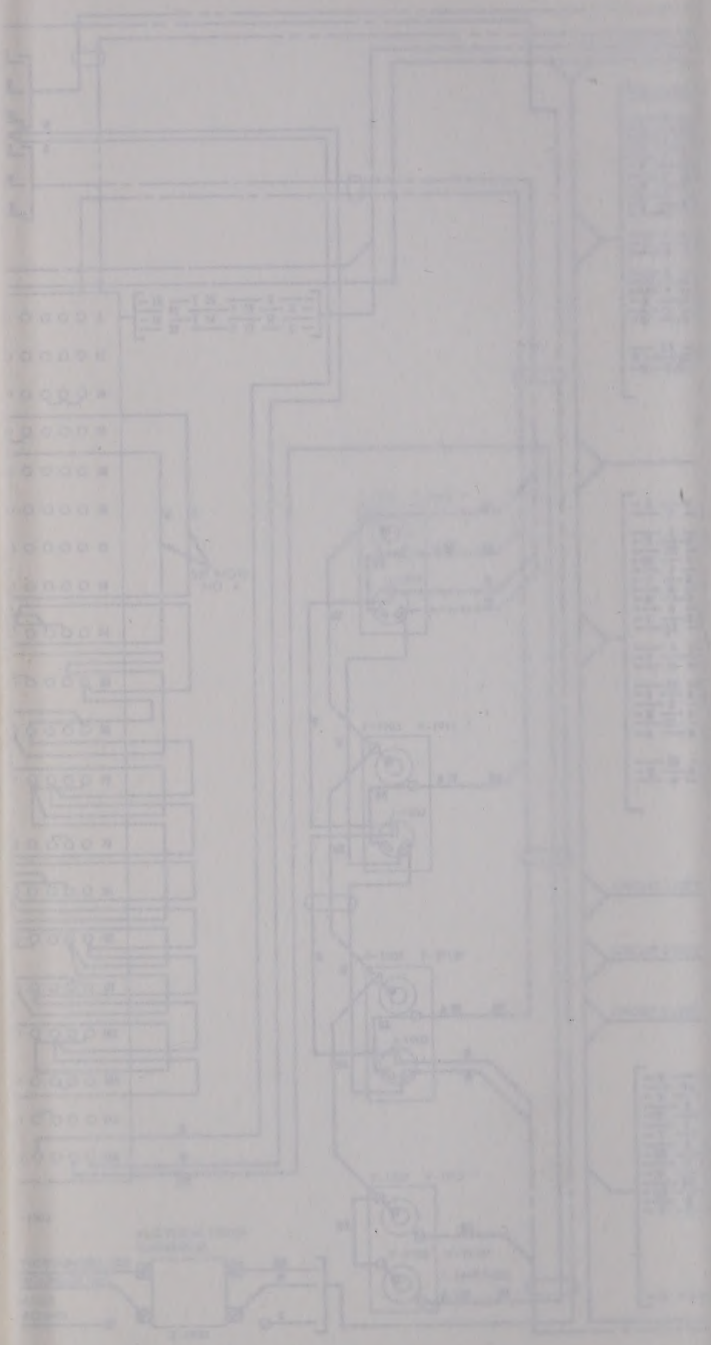

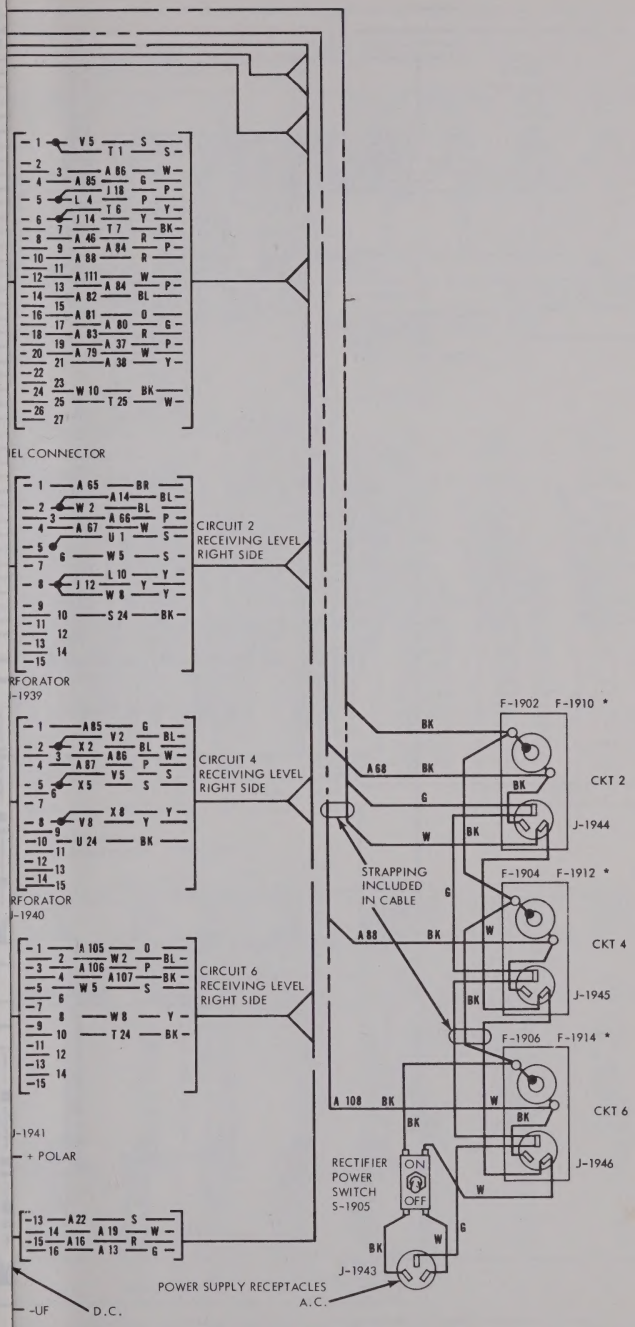

Figure 7—195. Receiver Cabinet CY-1523/FGC, Wiring Diagram

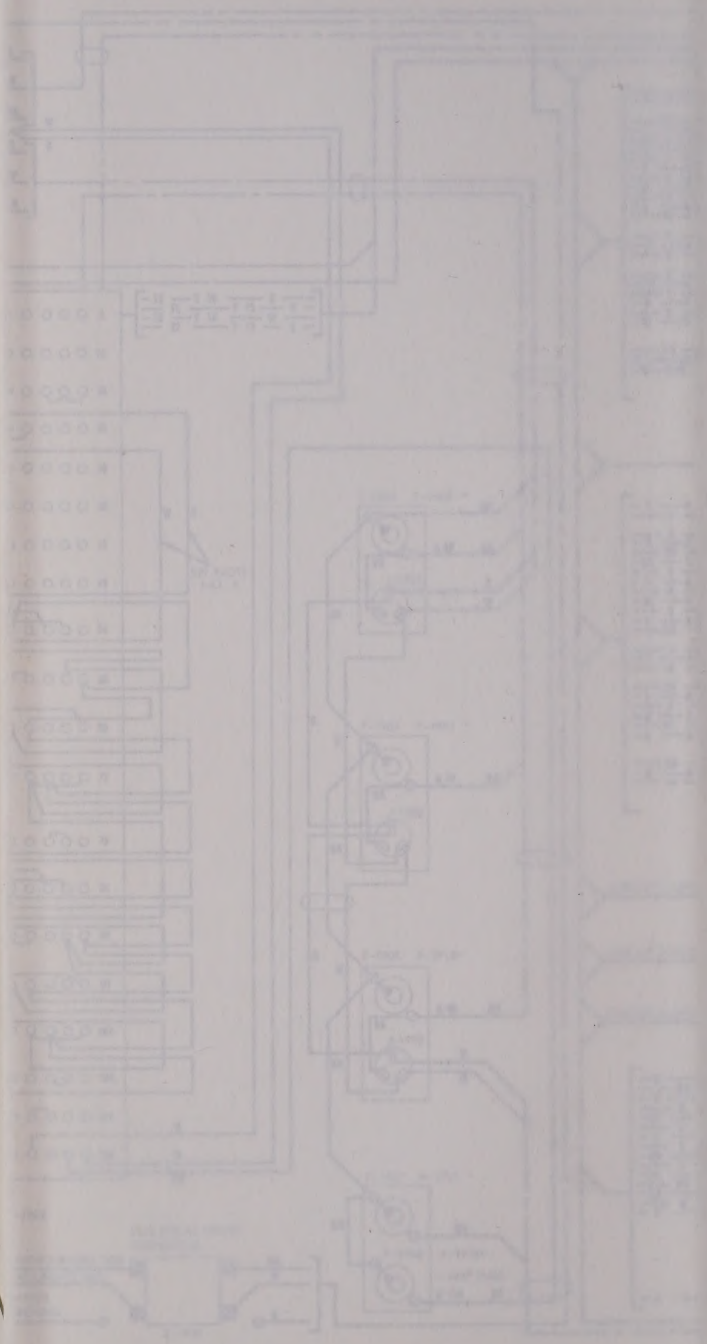

NAVSHIPS 92378 AN/FGC-38, AN/FGC-38X, AN/FGC-39
NAVSHIPS 92378 AN/FGC-38, AN/FGC-38X, AN/FGC-39

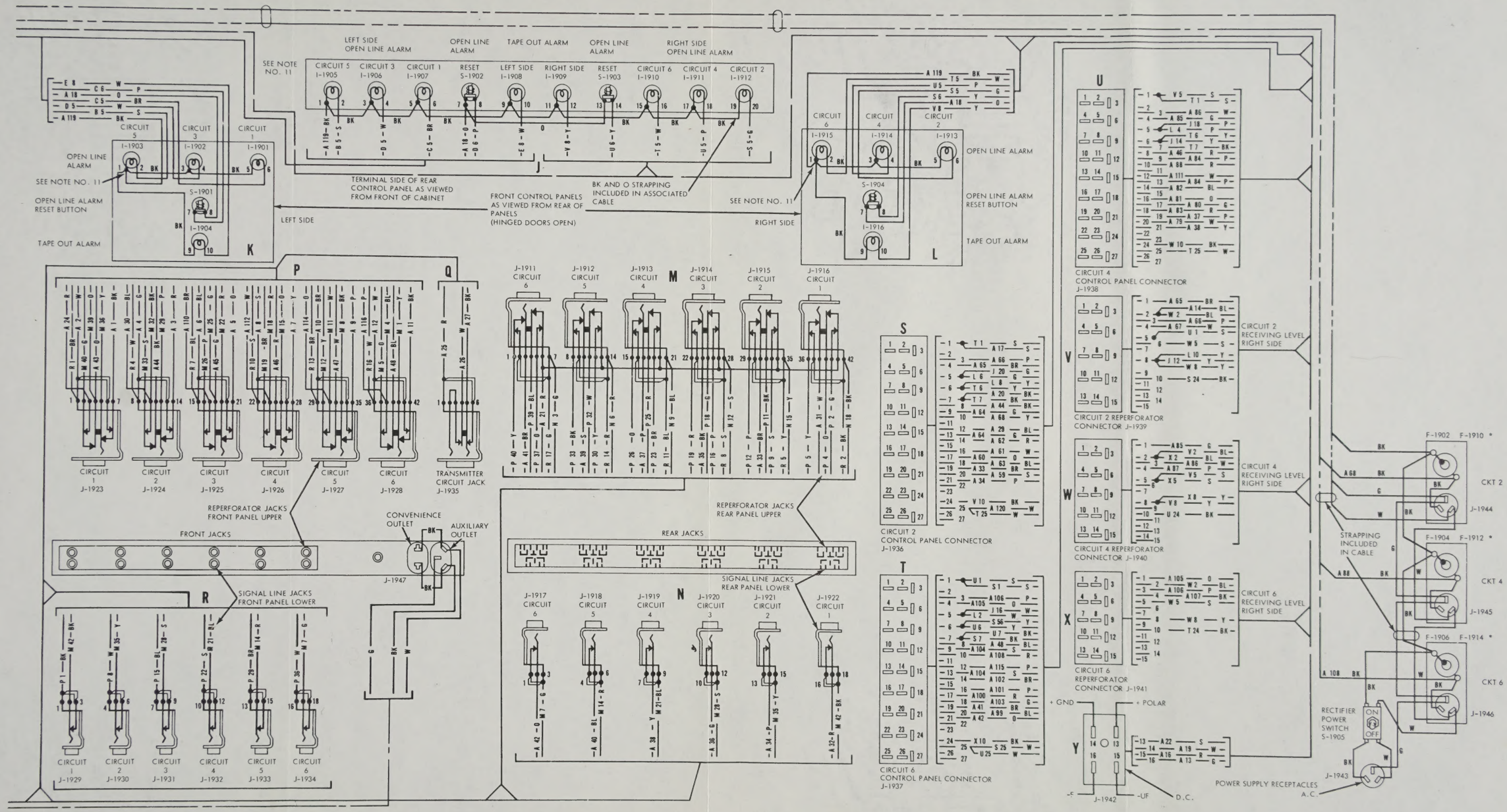

Figure 7—195. Receiver Cabinet CY-1523/FGC, Wiring Diagram

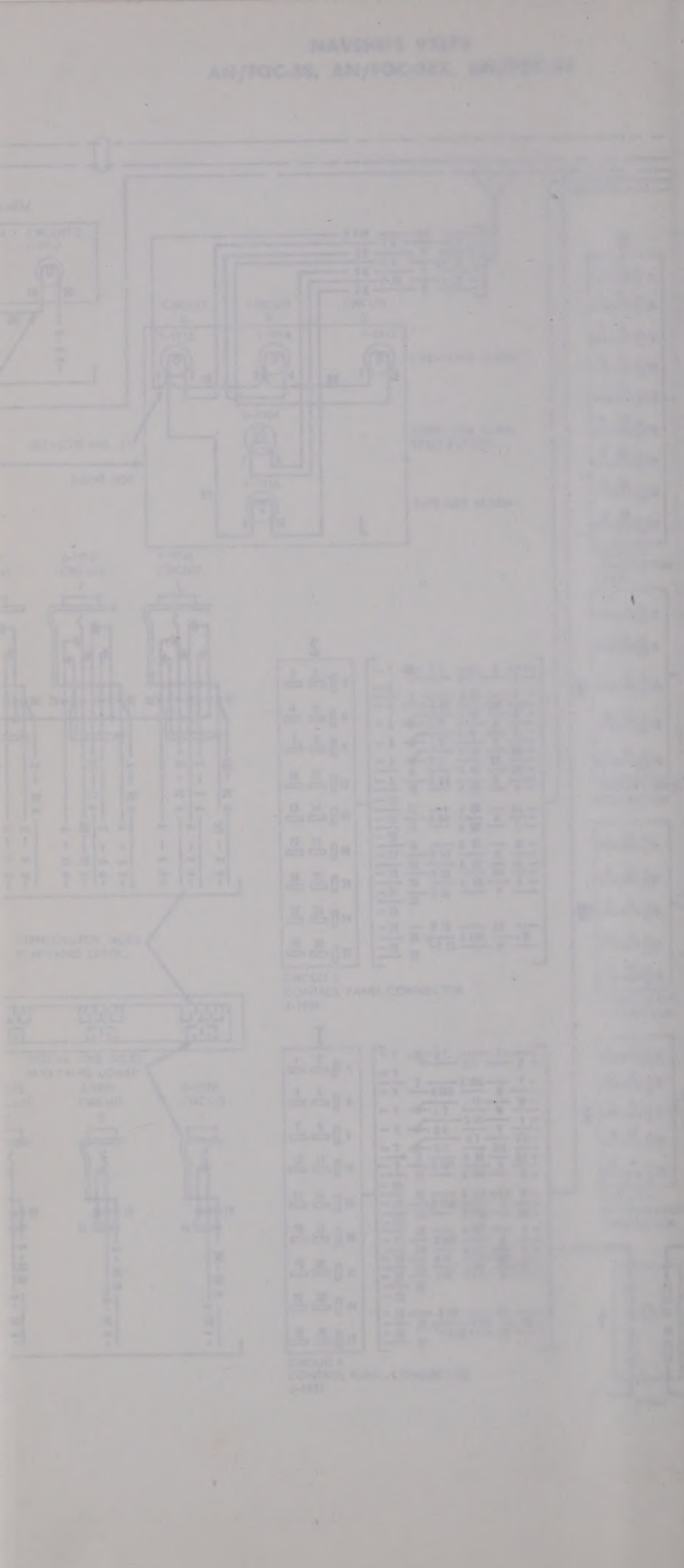

NUMBER	TERMINATING POINT		COLOR	LEADS CONNECTED TO RIGHT SIDE OF 200 POINT TERMINAL BOARD
1				41 M 6 BK, 75 L 2 S, 111 N 11 BK, 151 G 6 W, 188
2	N	23	BK	42 P 6 W, 76 L 18 R, 112 G 26 BL, M 24 W, 189
3	G	3	BL	43 G 22 P, 77 L 7 G, 113 P 7 W, 152 G 5 G, 190 P 19 O
4	J	20	W	J 24 P, 78 M 18 BL, 114, M 22 G, 191 P 13 BL
5				44 G 21 Y, 79, 115 P 17 W, 153, 192
6				J 22 Y, 80 M 3 BR, 116 M 9 O, 154 K 15 BK, 193
7				45 K 2 G, 81 L 3 BK, 117 M 17 R, 194
8				K 14 G, 82, 118 K 9 P, 155, 195
9				46 K 8 O, 83 L 1 P, 119 K 17 Y, 156 M 15 P, 196
10				K 12 O, 84 L 9 W, 120, 157, 197
11	J	6	BK	47 K 1 BL, 85, 121 N 12 O, 158 P 15 Y, 198
12				48 G 2 BR, 86, 122, 159 P 24 BR, 199
13	K	5	W	49 K 23 R, 87, 123 G 4 R, 160 M 24 S, 200
14				50 M 23 S, 88, 124 N 20 BR, 161 K 24 R
15	J	2	R	51 P 23 R, 89 L 16 BL, 125 N 19 P, 162
16	J	18	G	52 P 2 S, 90 L 13 O, 126, 163 N 8 Y
17	J	7	O	P 14 S, 91 L 12 G, 127, 164 L 8 O
18	K	18	BL	53 P 8 O, 92, 128, 165 J 8 BR
19				P 12 O, 93 G 12 O, 129, 166 N 10 BL
20	K	3	BR	54, 94 L 19 BL, 130, 167 L 10 P
21	J	3	P	55 P 1 BL, 95 L 14 BK, 131 N 6 W, 168 J 10 G
22				56, 96 L 21 S, 132, 169 N 4 S
23	J	1	S	57 K 4 BK, 97 M 21 BR, 133 P 5 R, 170 L 4 W
24	J	9	Y	58 M 4 W, 98 M 22 P, 134, 171 J 4 G
25				59 P 4 Y, 99 M 20 Y, 135 N 2 O, 172 P 11 BK
26				60 N 14 G, 100, 136 N 18 S, 173 J 5 BL
27				61 N 21 BR, 101, 137 N 7 Y, 174 L 5 R
28				62 P 21 P, 102, 138 P 18 P, 175 N 5 W
29	J	16	R	63 P 22 G, 103 G 14 G, 139, 176
30	J	13	BK	64 L 20 W, L 24 G, 140 P 3 BK, 177
31	J	12	O	65 P 20 BK, 104 G 13 S, 141 N 3 R, 178 K 10 BR
32				66, L 22 S, 142, 179
33	G	20	R	67, 105 M 2 R, 143 N 1 P, 180 M 10 P
34	J	19	G	68, M 14 R, 144 N 9 BL, 181
35	J	14	BL	69, 106 M 8 O, 145, 182 P 10 R
36	J	21	BR	70, M 12 O, 146, 183
37	K	21	S	71 L 6 Y, 107 M 1 BK, 147, 184 J 15 S
38	K	22	P	72, 108 J 11 W, 148, 185 L 15 Y
39	K	20	Y	73 M 5 BK, 109 P 9 BR, 149 N 16 R, 186 N 15 G
40	K	6	W	74, 110 L 11 P, 150 N 13 O, 187

TABLE 2

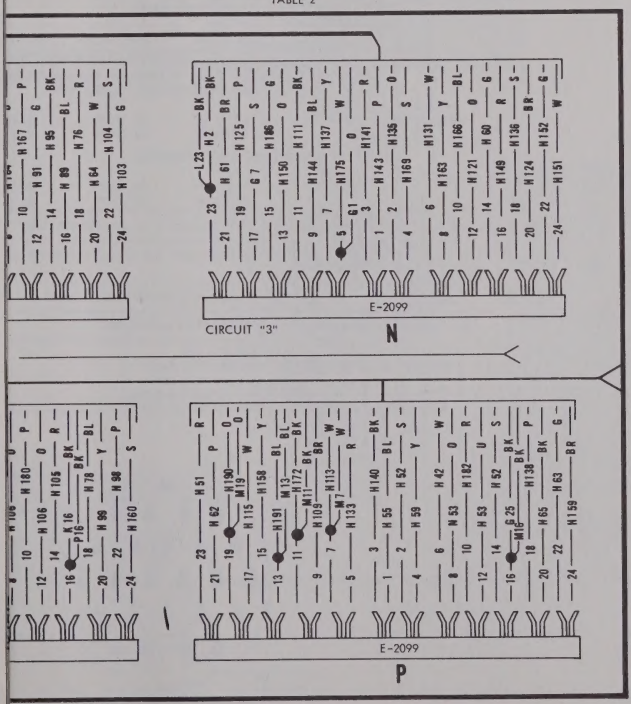

Transmitter Cabinet CY-1524/FGC, Wiring Diagram

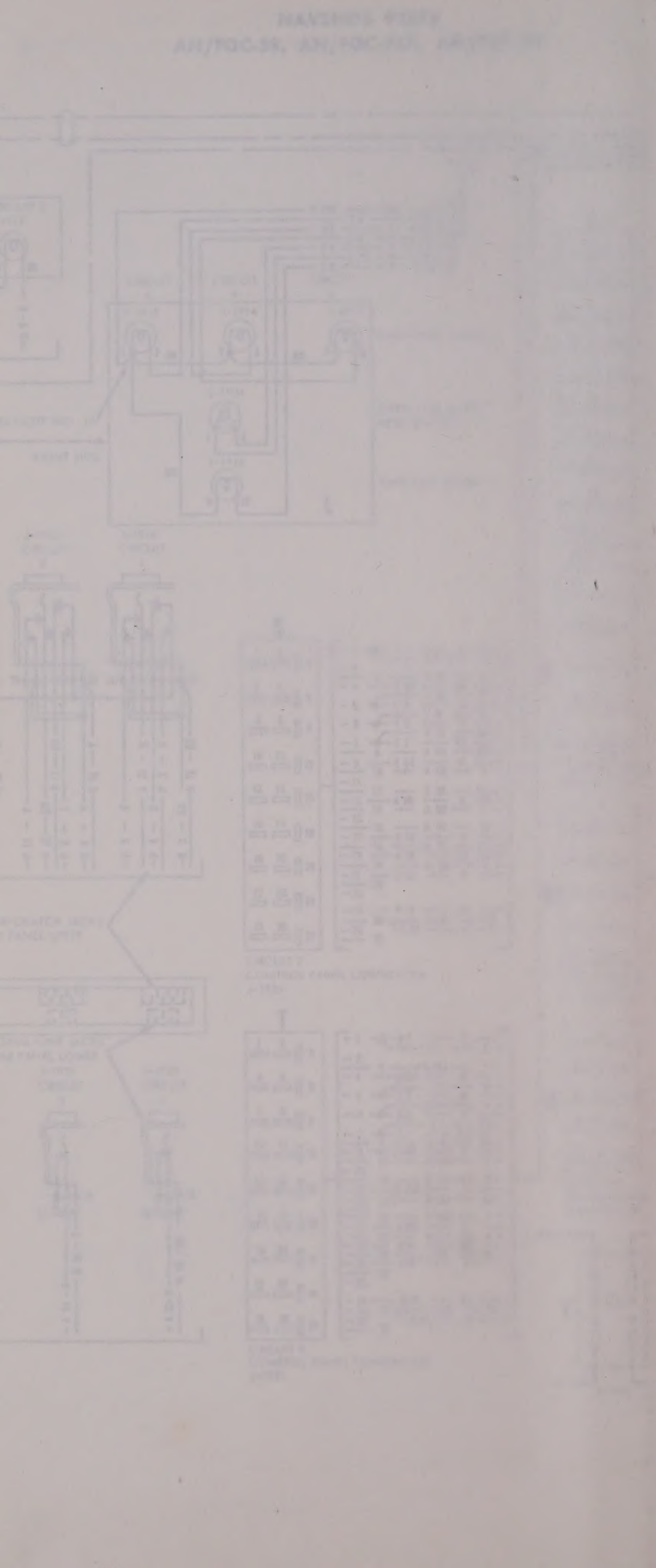

NO.	NOTES
1	ASSOCIATED CABLES: 128606 A.C. POWER CABLE; 128924 CONTROL CABLE RELAY SHELF; 128925 CONTROL CABLE ELECT SERVICE. STRAPS ON TERMINAL BOARD - 39522 RM; PLASTIC TUBING FOR STRAPS - 60019 RM
2	WIRE COLOR CODE AND SYMBOLS: Y YELLOW, P PURPLE, S SLATE, BL BLUE, G GREEN, W WHITE, R RED, BR BROWN, O ORANGE, BK BLACK
3	FEMALE AND MALE CONNECTORS SHOWN FROM SLOT AND PRONG SIDES
4	FOR USE WITH EXTERNAL SYNCHRONIZING PULSE, REMOVE THE FOLLOWING STRAPS FROM THE LEFT SIDE OF TERMINAL BOARD "H": CIRCUIT TERMINALS 29 TO 30, 89 TO 90, 149 TO 150, 100 TO 108, 101 TO 110, 102 TO 111. AND STRAP THE FOLLOWING TERMINALS: CIRCUIT 1, 2, 3; TERMINALS 108-TO 184, 110 TO 185, 111 TO 186
5	FOR USE WITHOUT THE "NUMBER DELETE" SWITCH AND WITH MESSAGE NUMBERING, REMOVE THE FOLLOWING STRAPS FROM THE LEFT SIDE OF TERMINAL BOARD "H": CIRCUIT 1, 2, 3; TERMINALS 31 TO 33, 91 TO 93, 121 TO 123. AND STRAP THE FOLLOWING TERMINALS: CIRCUIT 1, 2, 3; TERMINALS 31 TO 32, 91 TO 92, 121 TO 122
6	FOR USE WITHOUT THE "NUMBER DELETE" SWITCH AND WITHOUT MESSAGE NUMBERING, REMOVE THE FOLLOWING STRAPS FROM THE LEFT SIDE OF TERMINAL BOARD "H": CIRCUIT 1, 2, 3; TERMINALS 31 TO 33, 91 TO 93, 121 TO 123, 32 TO 34, 92 TO 94, 122 TO 124. AND STRAP THE FOLLOWING TERMINALS: CIRCUIT 1, 2, 3; TERMINALS 43 TO 44, 103 TO 104, 151 TO 152
7	FOR USE WITH MONITOR RERUNS WITHOUT NUMBERING - WHEN CIRCUIT IS WIRED FOR NORMAL MESSAGE NUMBERING, REMOVE THE FOLLOWING STRAPS ON THE LEFT SIDE FROM TERMINAL BOARD "H": CIRCUIT 1, 2, 3; TERMINALS 35 TO 36, 95 TO 96, 60 TO 61, 38 TO 39, 98 TO 99, 63 TO 65. AND STRAP THE FOLLOWING TERMINALS: CIRCUIT 1, 2, 3; TERMINALS 36 TO 37, 96 TO 97, 61 TO 62, 37 TO 38, 97 TO 98, 62 TO 63
8	COLOR CODED STRAPPING INCLUDED IN ASSOCIATED CABLE
9	STRAPPING INDICATED BY DOUBLE LINE ═══ IS NOT INCLUDED IN FORMED CABLES
10	THE LAMP SOCKETS INCLUDE A 30,000 OHM SERIES RESISTOR
11	* DENOTES EQUIPMENT USED IN AN/FGC-38X
12	FOR RELATED ILLUSTRATIONS SEE: 7-191 CABINET CY-1524/FGC PARTS; 7-192 CABINET CY-1524/FGC PARTS; 7-207 TRANSMITTER GROUP SCHEMATIC

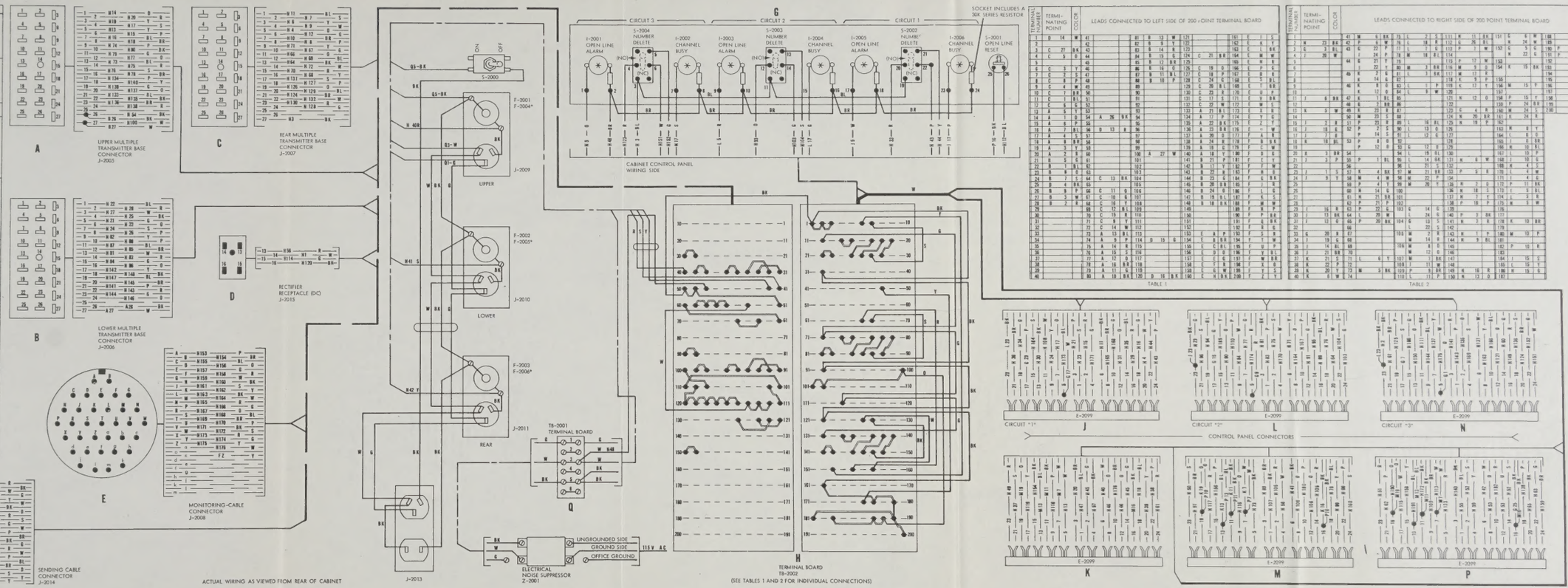

TABLE 1

TERMINAL NO.	TERMINATING POINT	COLOR	LEADS CONNECTED TO LEFT SIDE OF 200 POINT TERMINAL BOARD
1	1	B	14 W 41
2	2		42
3	3	C	27 BK 43
4	4	C	5 O 44
5	5		45
6	6	C	3 Y 46
7	7	C	2 S 47
8	8	C	8 P 48
9	9	C	4 W 49
10	10	C	1 BR 50
11	11	C	1 BL 51
12	12	C	6 G 52
13	13	A	1 O 53
14	14	A	1 O 54 A 26 BK 54
15	15	A	6 P 55
16	16	A	7 BL 56 D 13 R 56
17	17	A	4 S 57
18	18	A	5 Y 58
19	19	A	3 Y 59
20	20	A	2 S 60
21	21	B	5 G 61
22	22	B	1 BL 62
23	23	B	8 O 63
24	24	B	7 S 64 C 13 BK 104
25	25	B	6 BR 65
26	26	B	P 66 C 11 O 106
27	27	B	W 67 C 10 G 107
28	28	B	2 R 68 C 12 T 108
29			69 C 17 BL 109
30			70 C 15 R 110
31			71 C 9 Y 111
32			72 C 14 W 112
33			73 A 13 BL 113
34			74 A 9 P 114 D 15 G 154
35			75 A 14 R 115 E 154
36			76 A 15 S 116 156
37			77 A 12 B 117 157
38			78 A 16 BR 118 158
39			79 A 11 G 119 160
40			80 A 10 BR 120 D 16 BK 160

TERMINAL NO.	TERMINATING POINT	COLOR	LEADS CONNECTED TO RIGHT SIDE OF 200 POINT TERMINAL BOARD
1	41	M	G BK 75 L 2 S 111 M 11 BK 151 G R W 188
2	N 23	BK	42 P S W 76 L 18 R 112 G 20 BL K 24 W 189
3	J 27	W	43 G 22 P 77 L 3 BL 113 G 21 BL 152 G S W 190
4	J 28	W	44 P 78 M 18 BL 114 W 22 G 153 P 13 BL
5	44	R	21 Y 79 115 P 17 W 153 192
6			22 Y 80 M 3 BR 116 M 9 G 154 K 15 BK 193
7	45	K	2 G 81 L 3 BK 117 M 13 R 194
8			14 G 82 118 K 155 195
9	46	K	8 O 83 L 17 P 119 G 11 Y 156 M 15 Y 196
10			12 G 84 L 5 W 120 P 157 197
11	6	BK	47 K 1 BL 85 121 K 12 O 158 P 19 Y 198
12			48 G 2 BR 86 122 P 159 199
13	K 3	W	49 K 23 P 87 123 C 4 R 160 M 24 R 200
14			50 M 23 S 88 124 N 20 BR 161 K 24 R
15	2	R	51 P 25 G 89 16 BL 125 N 19 P 162
16	18	G	52 P 5 90 L 13 O 126 163 K R Y
17	7	E	P 14 S 91 L 12 G 127 164 C S Y
18	10	BL	53 P 12 O 92 L 128 165 C S BR
19	12	O	93 G 12 O 129 166 K 10 BL
20	3	BK	54 L 19 BL 130 167 C S BK
21	3	P	55 P 1 BL 95 L 14 BK 131 K R W 168 J 10 G
22			56 95 L 21 C 132 169 K 4 L
23	1	S	57 K 4 BK 97 M 21 BR 133 P S R 170 C L R
24	3	Y	58 M 4 W 98 M 22 P 134 171 J 4 G
25			59 M 20 BR 99 M 20 135 K 2 O 172 J 11 BK
26			60 M 14 G 100 136 M 18 S 173 J S BL
27			61 M 21 BR 101 137 K S 174 L S Y
28			62 P 22 G 102 138 P 18 P 175 M S W
29	16	R	63 P 22 G 103 C 14 O 139 P 176
30	17	R	64 P 23 W 140 P 177
31	12	O	65 P 20 BK 104 G 13 S 141 M 3 R 178 K 10 BR
32			66 142 P 179
33	20	R	67 M 7 S 143 K 1 P 180 M 10 P
34	19	G	68 M 14 O 144 K 9 BL 181
35	14	BL	69 M 8 O 145 182 P 10 K
36	21	BR	70 M 12 O 146 183
37	1	L	6 Y 107 M 1 BK 147 M 184
38	22	S	71 M 1 BK 148 185 C 15 Y
39	23	Y	72 M 3 BK 109 P 9 BR 149 K 16 R 186 K 15 G
40	24	W	74 110 L 9 P 150 K 12 O 187

TABLE 2

Figure 7—196. Transmitter Cabinet CY-1524/FGC, Wiring Diagram

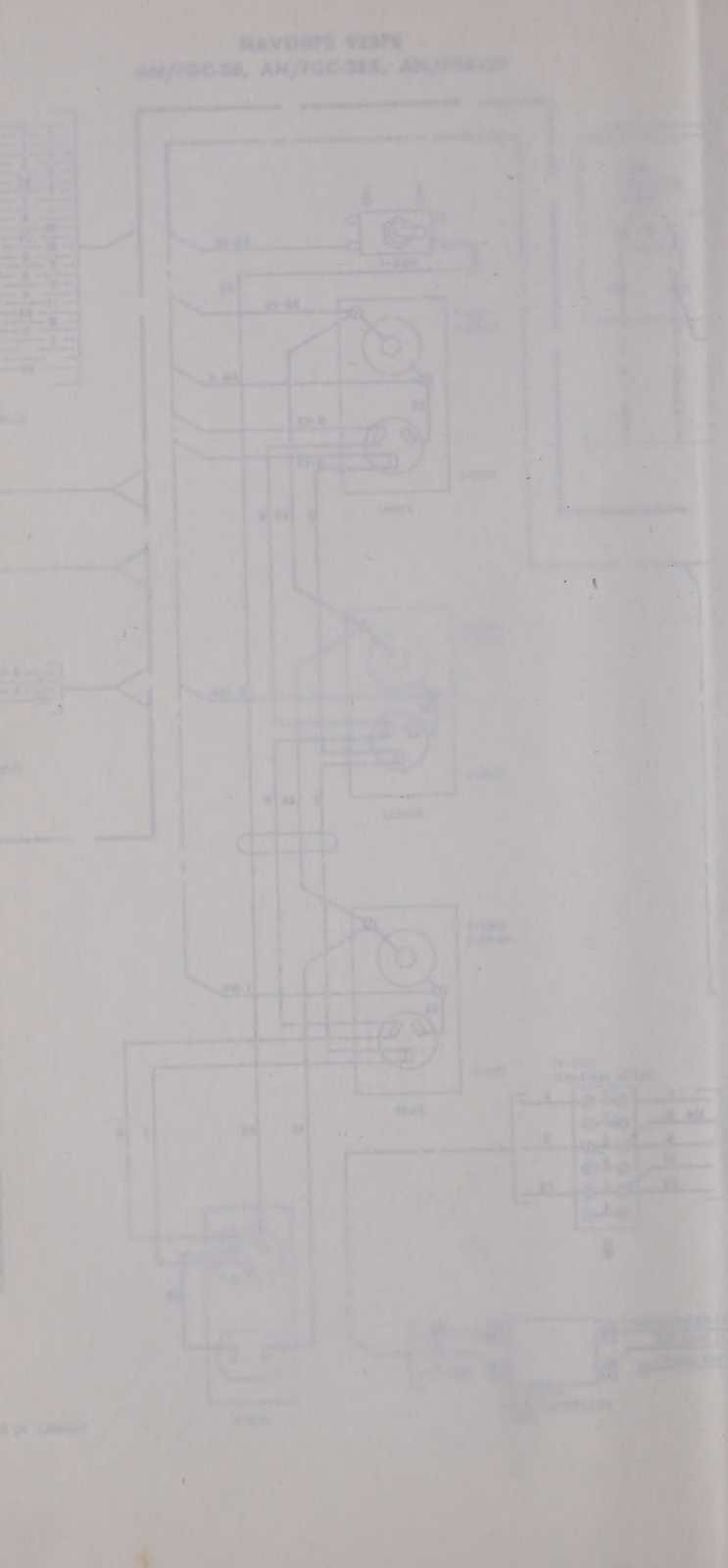

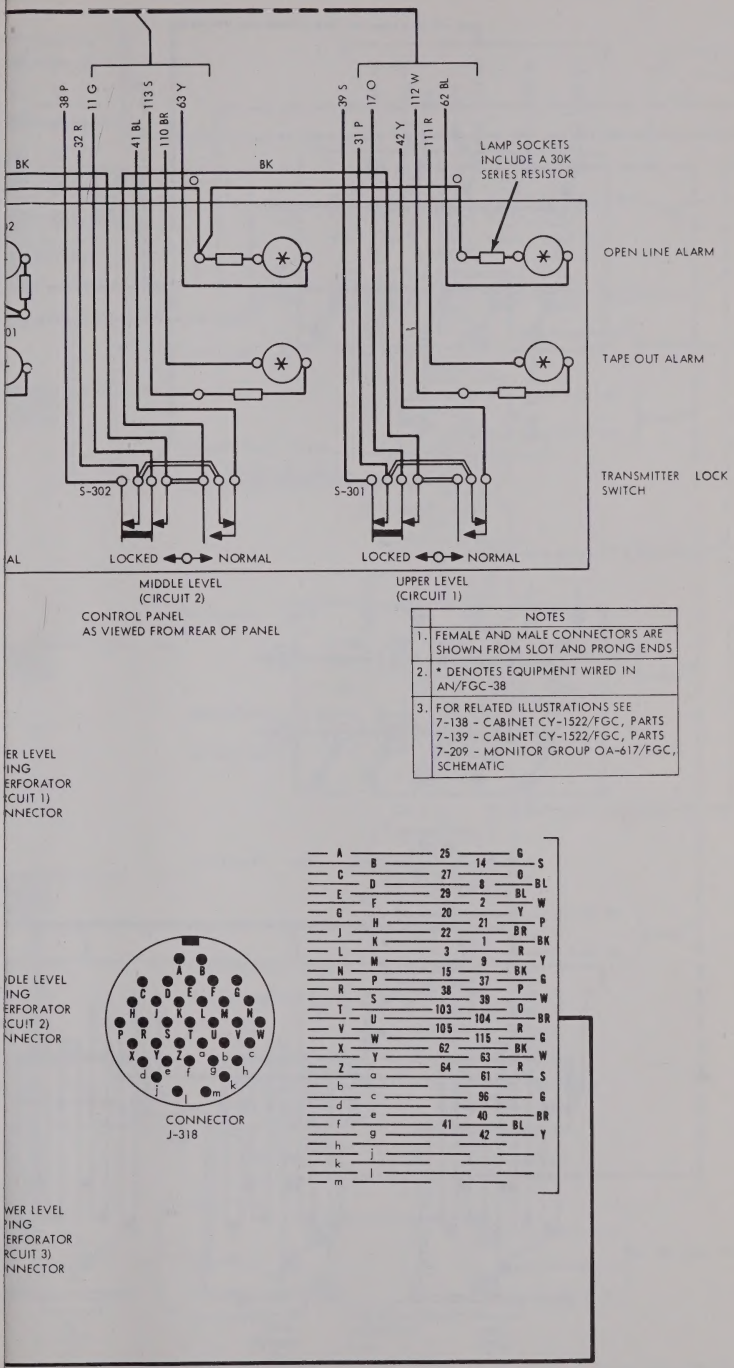

	NOTES
1.	FEMALE AND MALE CONNECTORS ARE SHOWN FROM SLOT AND PRONG ENDS
2.	* DENOTES EQUIPMENT WIRED IN AN/FGC-38
3.	FOR RELATED ILLUSTRATIONS SEE 7-138 - CABINET CY-1522/FGC, PARTS 7-139 - CABINET CY-1522/FGC, PARTS 7-209 - MONITOR GROUP OA-617/FGC, SCHEMATIC

Figure 7—197. Monitor Cabinet CY-1522/FGC, Wiring Diagram

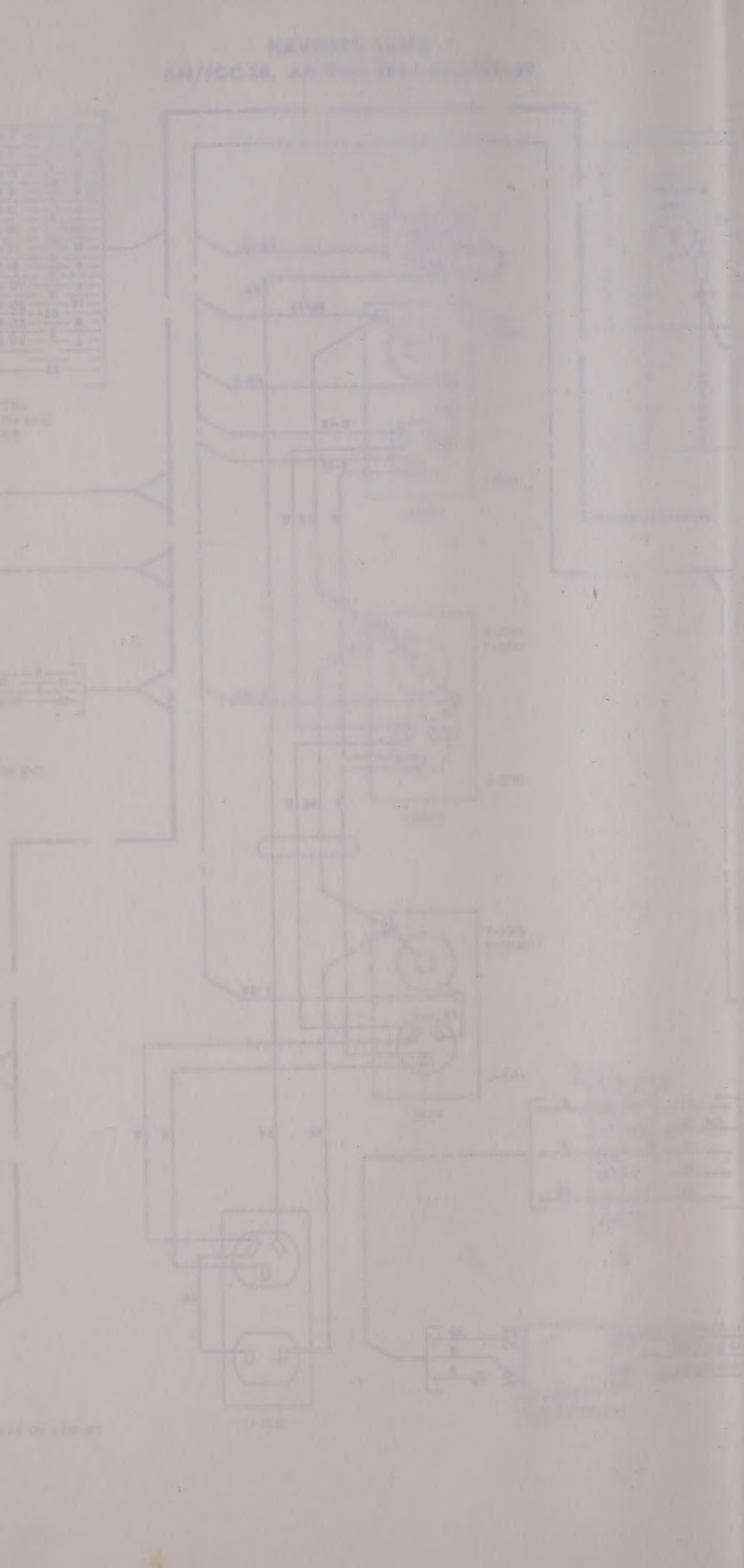

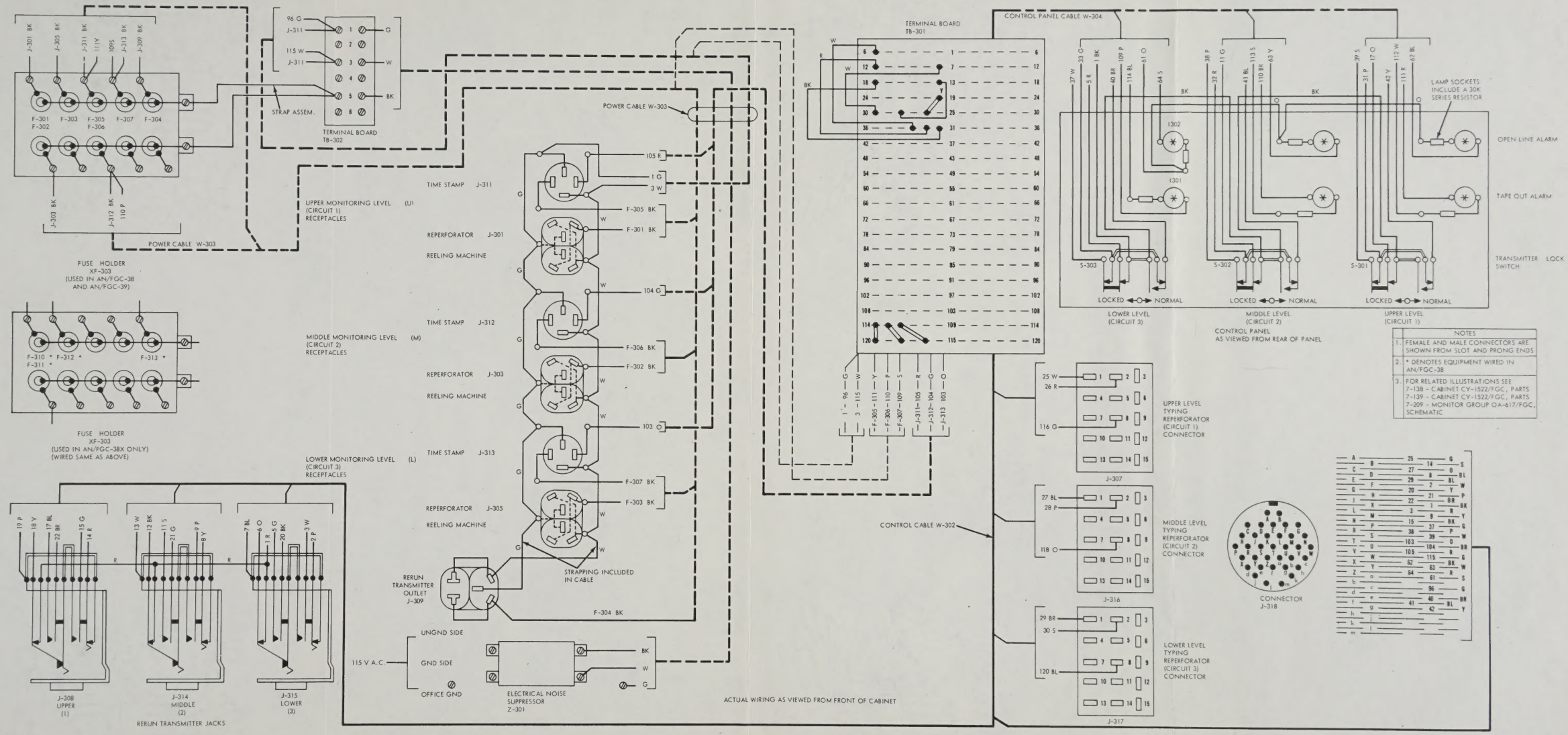
TERMINAL BOARD TB-302
STRAP ASSEM.
POWER CABLE W-303
FUSE HOLDER XF-303 (USED IN AN/FGC-38 AND AN/FGC-39)
FUSE HOLDER XF-303 (USED IN AN/FGC-38X ONLY) (WIRED SAME AS ABOVE)
UPPER MONITORING LEVEL (U) (CIRCUIT 1) RECEPTACLES
MIDDLE MONITORING LEVEL (M) (CIRCUIT 2) RECEPTACLES
LOWER MONITORING LEVEL (L) (CIRCUIT 3) RECEPTACLES
TIME STAMP J-311
REPERFORATOR J-301 REELING MACHINE
TIME STAMP J-312
REPERFORATOR J-303 REELING MACHINE
TIME STAMP J-313
REPERFORATOR J-305 REELING MACHINE
RERUN TRANSMITTER OUTLET J-309
STRAPPING INCLUDED IN CABLE
F-304 BK
UNGND SIDE
GND SIDE
OFFICE GND
115 V A.C.
ELECTRICAL NOISE SUPPRESSOR Z-301
J-308 UPPER (1)
J-314 MIDDLE (2)
J-315 LOWER (3)
RERUN TRANSMITTER JACKS
ACTUAL WIRING AS VIEWED FROM FRONT OF CABINET
TERMINAL BOARD TB-301
CONTROL CABLE W-302
CONTROL PANEL CABLE W-304
LAMP SOCKETS INCLUDE A 30K SERIES RESISTOR
OPEN LINE ALARM
TAPE OUT ALARM
TRANSMITTER LOCK SWITCH
S-303
S-302
S-301
LOCKED ◄-O-► NORMAL
LOWER LEVEL (CIRCUIT 3)
MIDDLE LEVEL (CIRCUIT 2)
UPPER LEVEL (CIRCUIT 1)
CONTROL PANEL AS VIEWED FROM REAR OF PANEL
UPPER LEVEL TYPING REPERFORATOR (CIRCUIT 1) CONNECTOR
MIDDLE LEVEL TYPING REPERFORATOR (CIRCUIT 2) CONNECTOR
LOWER LEVEL TYPING REPERFORATOR (CIRCUIT 3) CONNECTOR
J-307
J-316
J-317
CONNECTOR J-318
NOTES
1. FEMALE AND MALE CONNECTORS ARE SHOWN FROM SLOT AND PRONG ENDS
2. * DENOTES EQUIPMENT WIRED IN AN/FGC-38
3. FOR RELATED ILLUSTRATIONS SEE 7-138 - CABINET CY-1522/FGC, PARTS 7-139 - CABINET CY-1522/FGC, PARTS 7-209 - MONITOR GROUP OA-617/FGC, SCHEMATIC

Figure 7—197. Monitor Cabinet CY-1522/FGC, Wiring Diagram

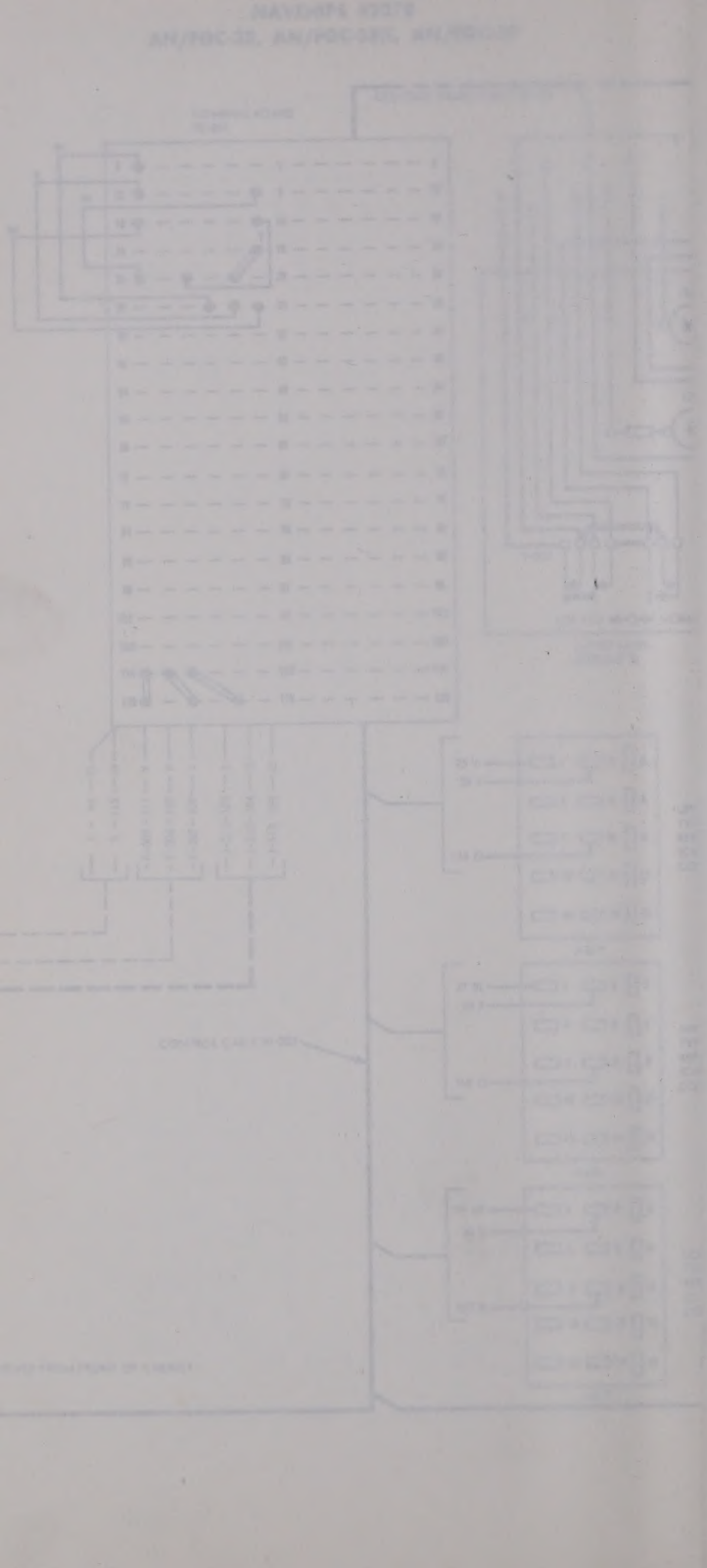

	NOTE:
1	ALL WIRES NOT COLOR CODED ARE WHITE.

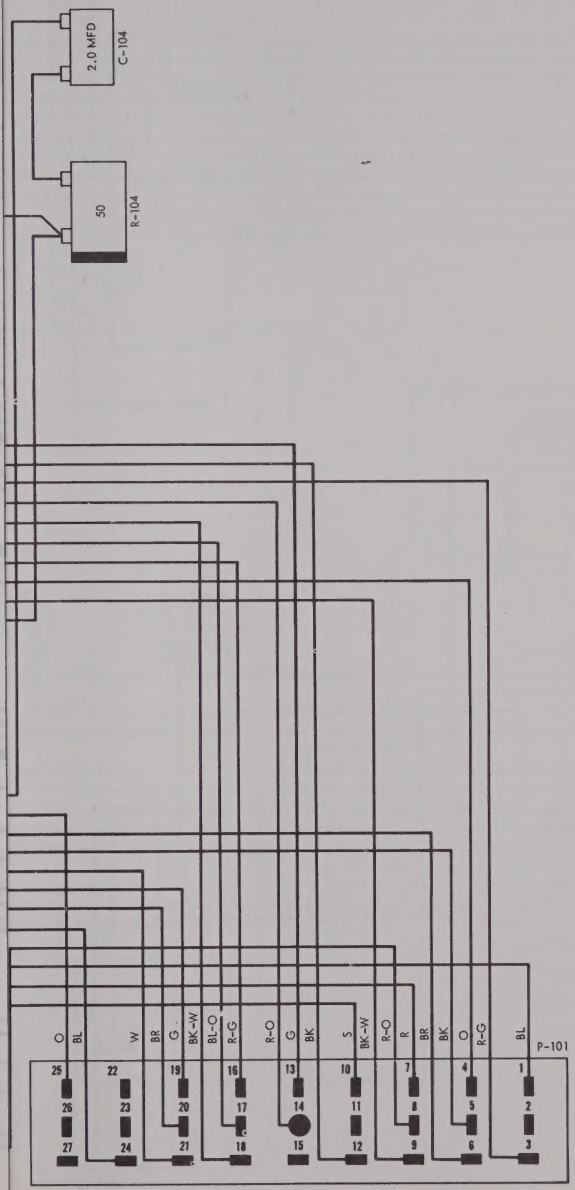

Figure 7—198. Control Panel SB-357/FGC, Wiring Diagram

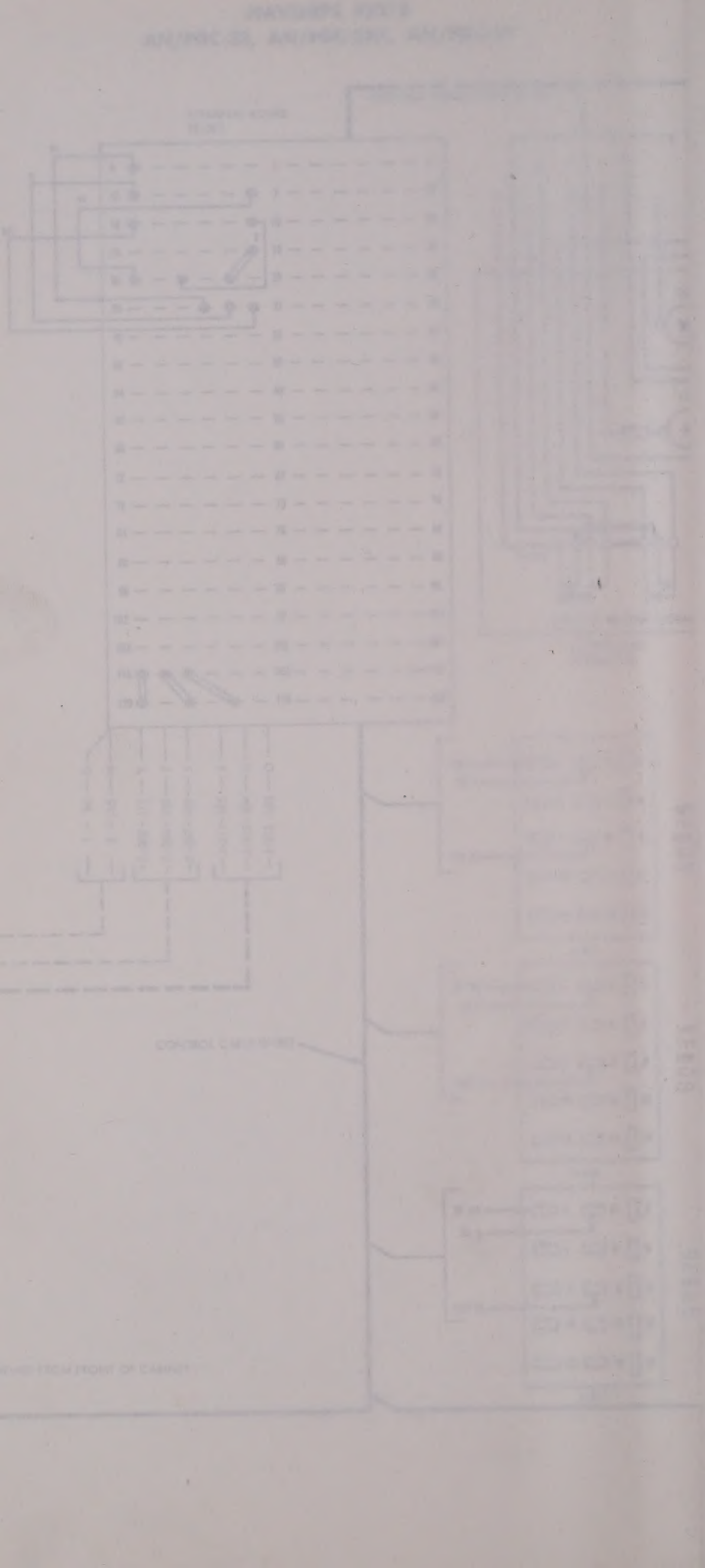

NAVSHIPS 92378 AN/FGC-38, AN/FGC-38X, AN/FGC-39
NAVSHIPS 92378 AN/FGC-38, AN/FGC-38X, AN/FGC-39

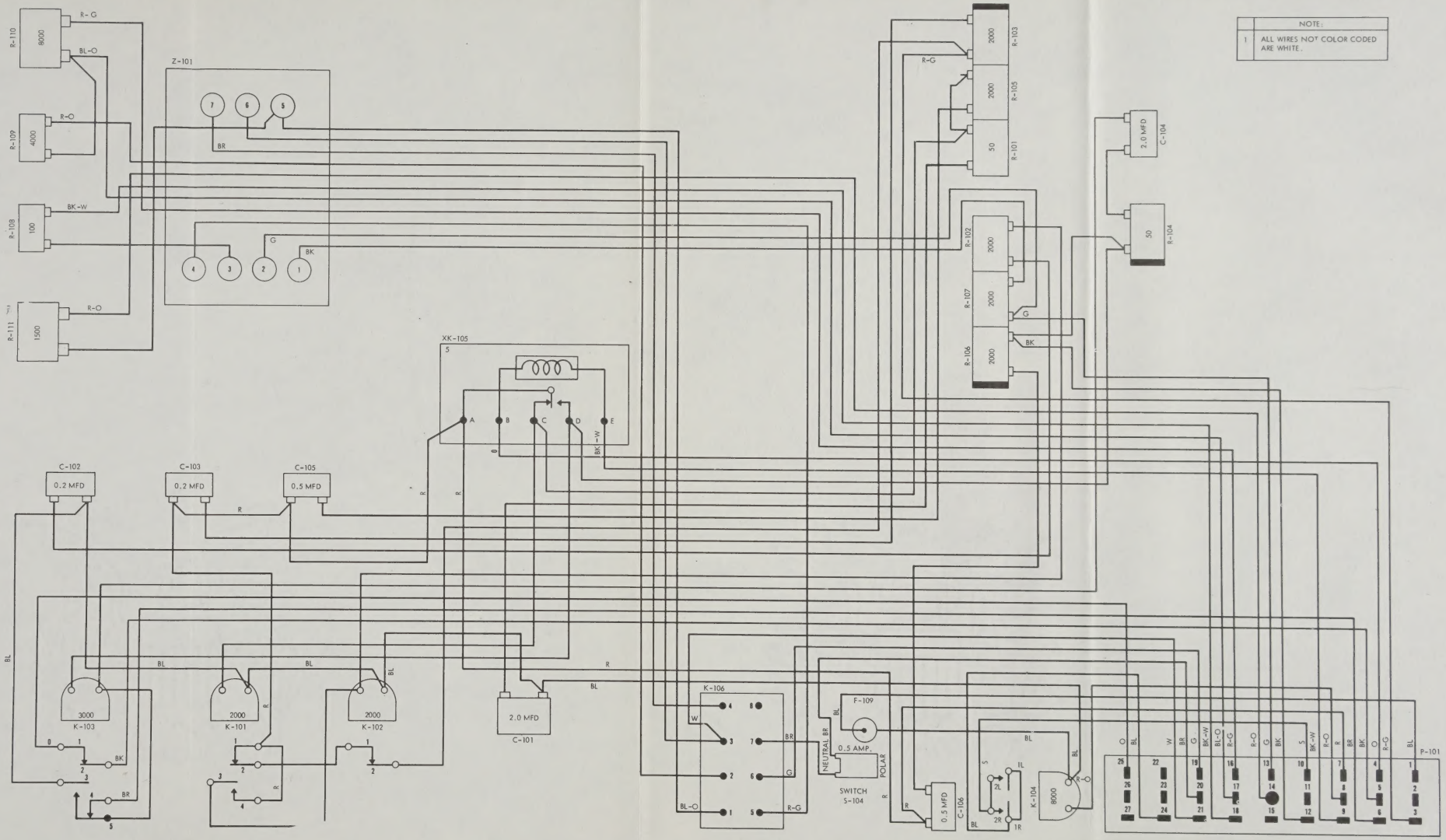

Figure 7—198. Control Panel SB-357/FGC, Wiring Diagram

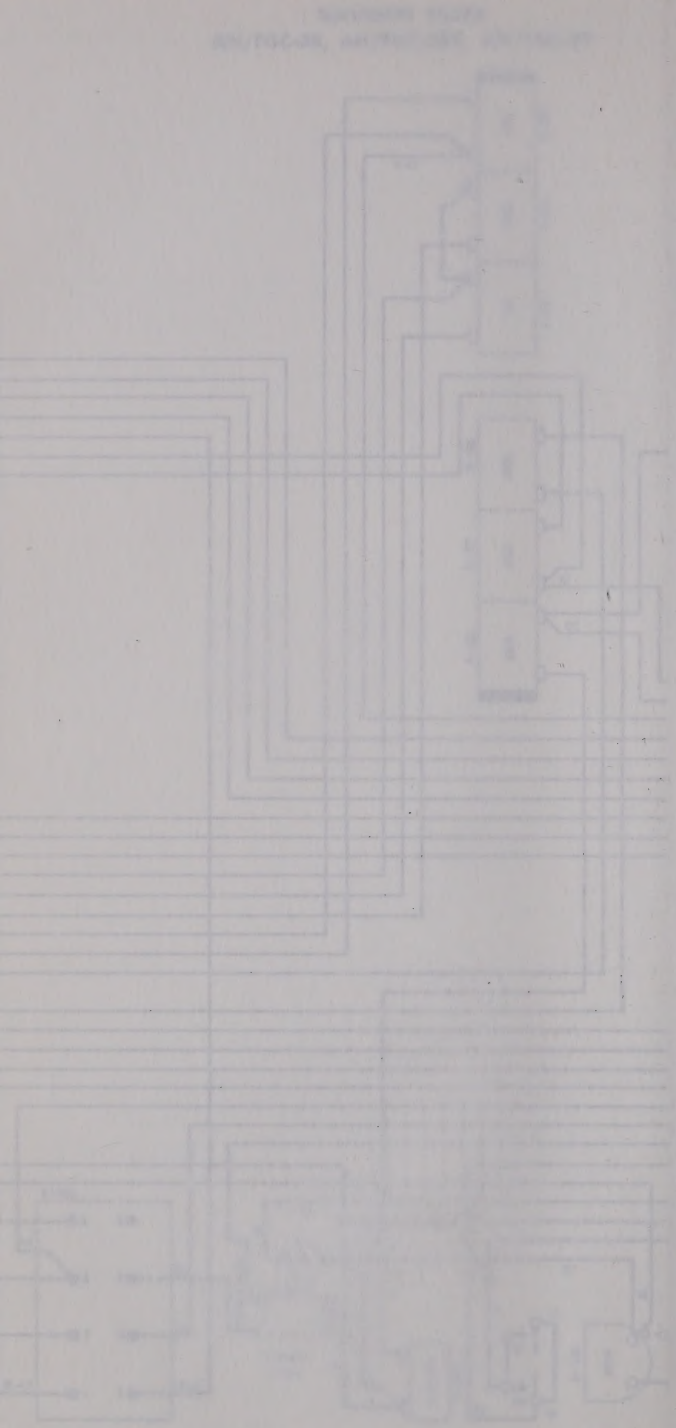

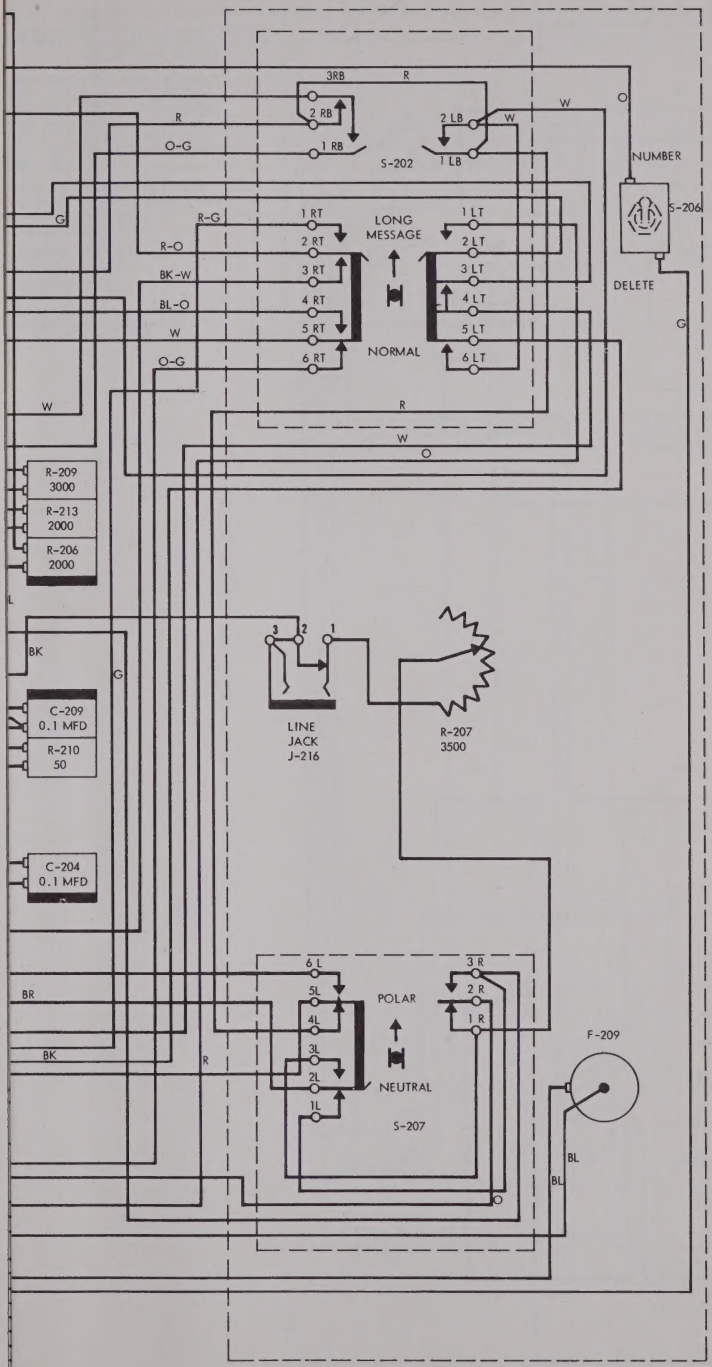

–199. Control Panel SB-358/FGC, Wiring Diagram

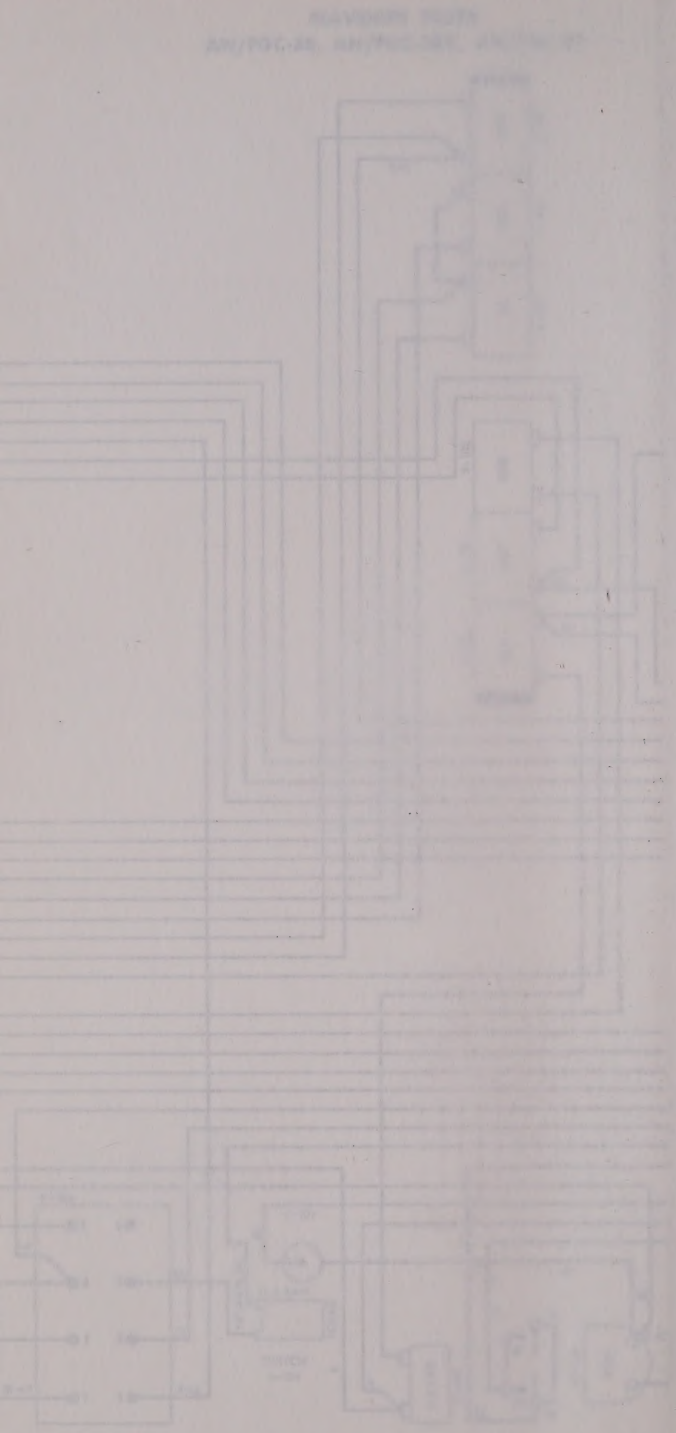

NAVSHIPS 92378
AN/FGC-38, AN/FGC-38X, AN/FGC-39
NAVSHIPS 92378
AN/FGC-38, AN/FGC-38X, AN/FGC-39

NOTE:

1. WIRE COLOR CODE: (WIRES MAY BE SOLID COLOR OR TRACER IN WHITE WIRE)

O	ORANGE	R–G	RED–GREEN
G	GREEN	R–O	RED–ORANGE
BR	BROWN	BL–O	BLUE–ORANGE
BK	BLACK	BL–W	BLUE–WHITE
R	RED	BK–W	BLACK–WHITE
BL	BLUE	O–G	ORANGE–GREEN
W	WHITE		

ALL BLUE WIRE IS NEGATIVE BATTERY
ALL RED WIRE IS POSITIVE BATTERY (GROUND)

2. FOR RELATED ILLUSTRATIONS SEE:
CONTROL PANEL–FRONT VIEW
CONTROL PANEL–REAR VIEW
TRANSMITTER SCHEMATIC
CABINET WIRING DIAGRAM

3. ALL WIRES NOT COLOR CODED ARE WHITE.

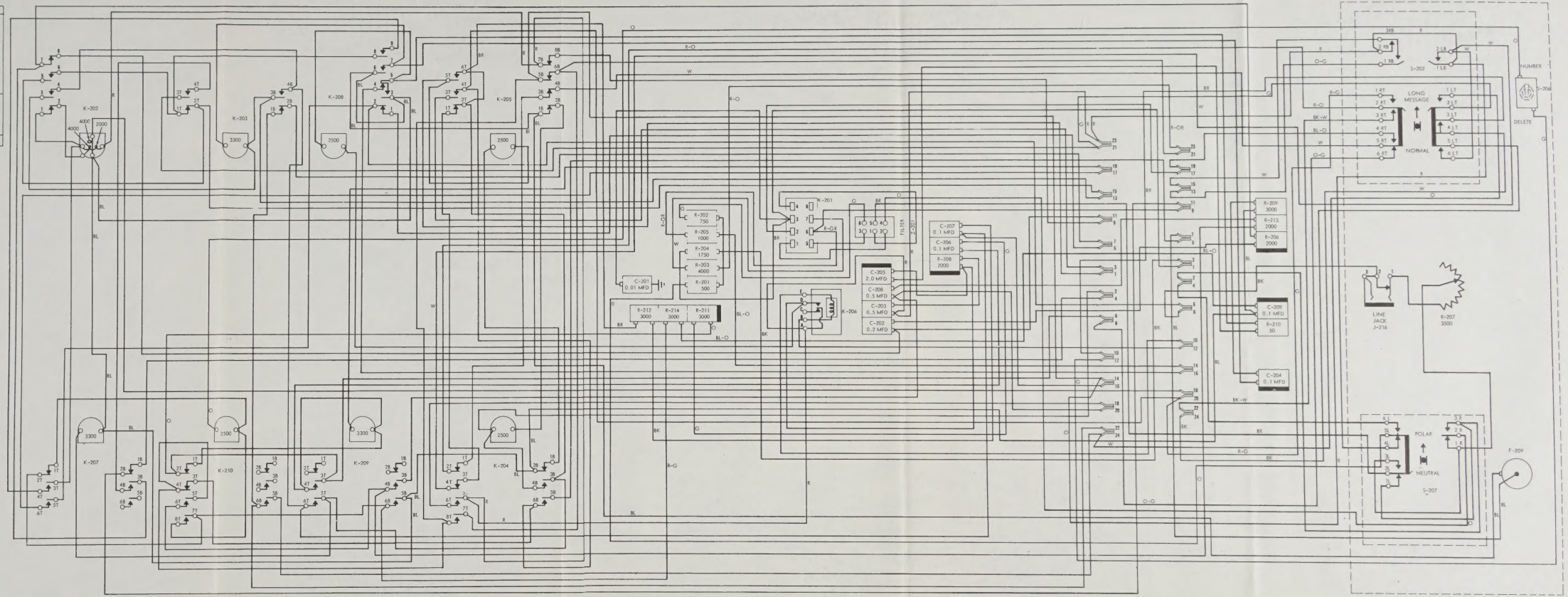

Figure 7–199. Control Panel SB-358/FGC, Wiring Diagram

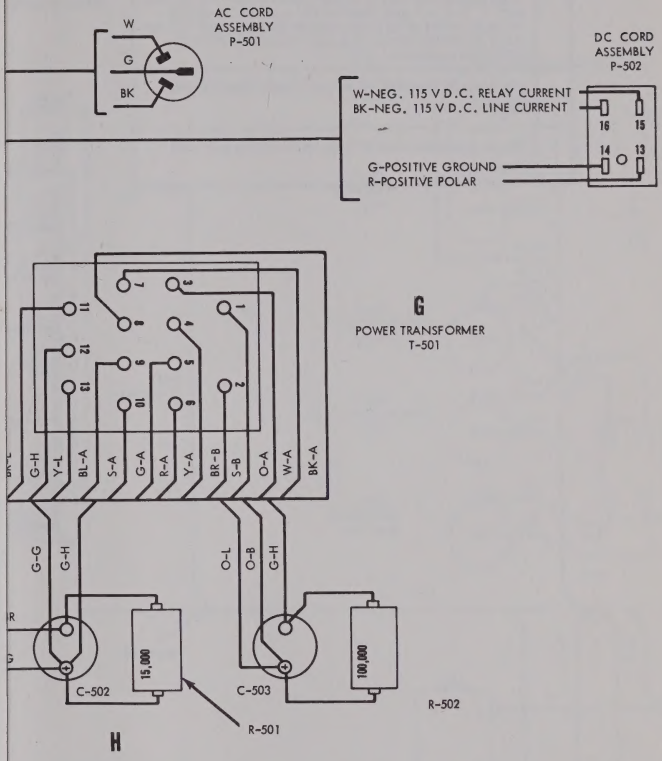

Figure 7—200. Power Supply PP-987/U, Wiring Diagram

NAVSHIPS 92378 AN/FGC-38, AN/FGC-38X, AN/FGC-39
NAVSHIPS 92378 AN/FGC-38, AN/FGC-38X, AN/FGC-39

NO.	NOTES
1.	VARISTOR AGEING MAY BE COMPENSATED FOR BY USE OF FINE TAPS 1, 2, 3, 4, 5 AND COARSE TAPS L, M, H. IF OUTPUT VOLTAGE DROPS AFTER LONG PERIODS OF USE, MOVE FLEXIBLE LEADS TO HIGHER TAPS AS REQUIRED TO RESTORE OUTPUT VOLTAGE TO ORIGINAL LEVEL
2.	ARROWHEADS TERMINATING FLEXIBLE LEADS INDICATE SPADE LUGS.
3.	FEMALE AND MALE CONNECTORS SHOWN FROM SLOT AND PRONG END.

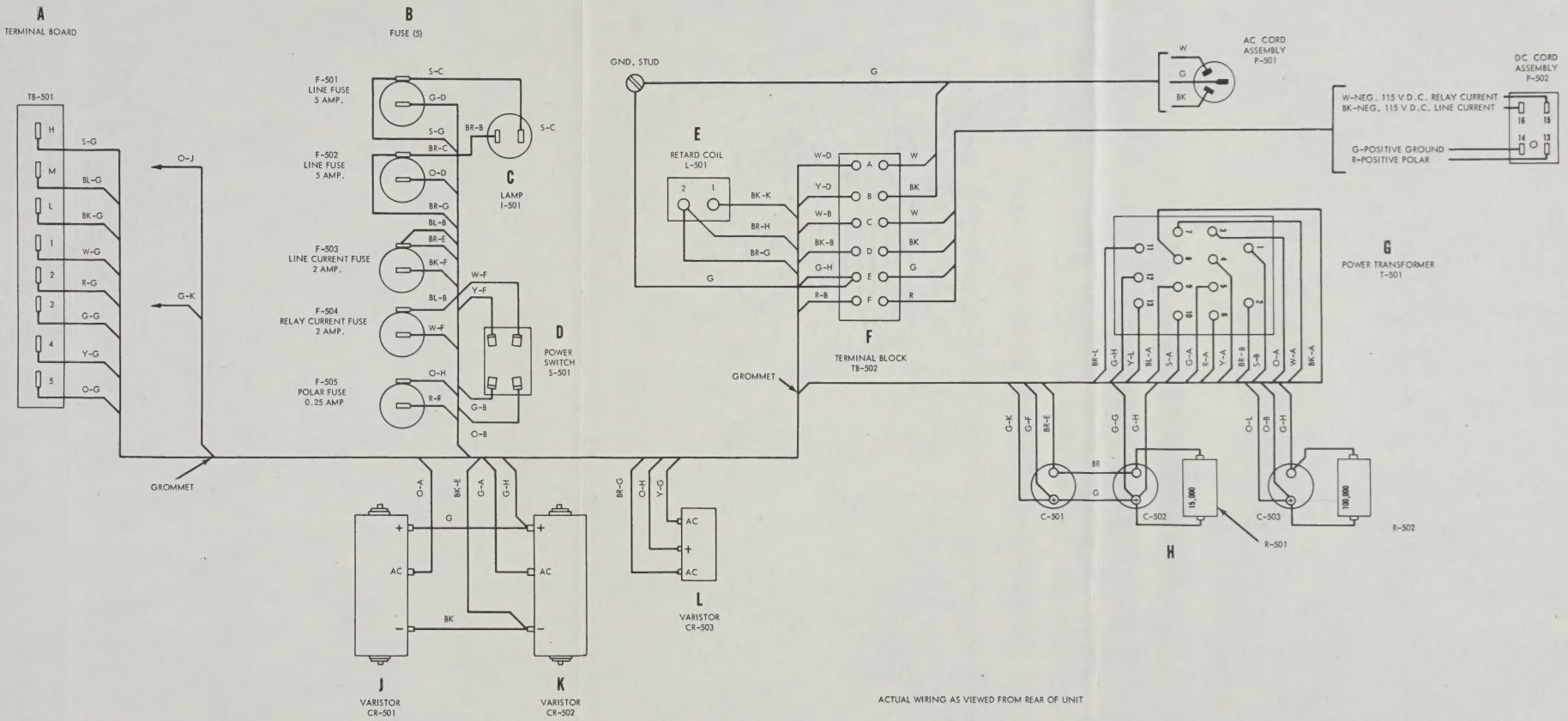

Figure 7—200. Power Supply PP-987/U, Wiring Diagram

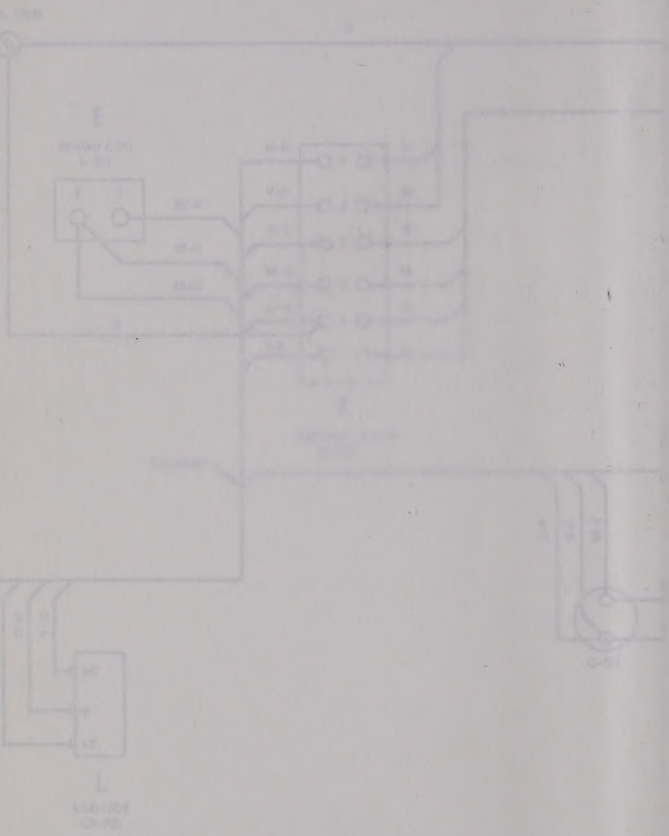

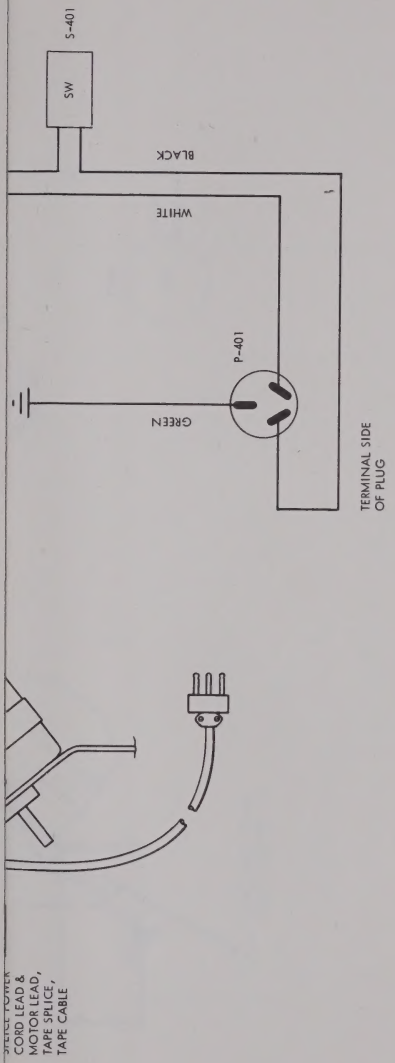

Figure 7—201. Reeling Machine RL-173/FGC, Wiring Diagram

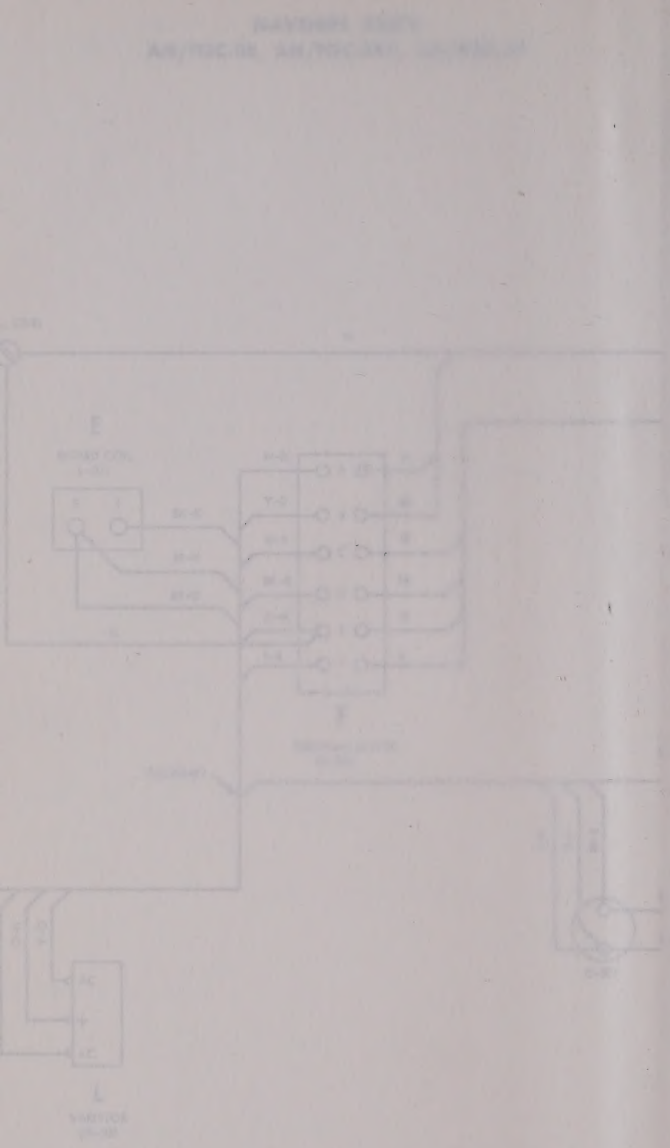

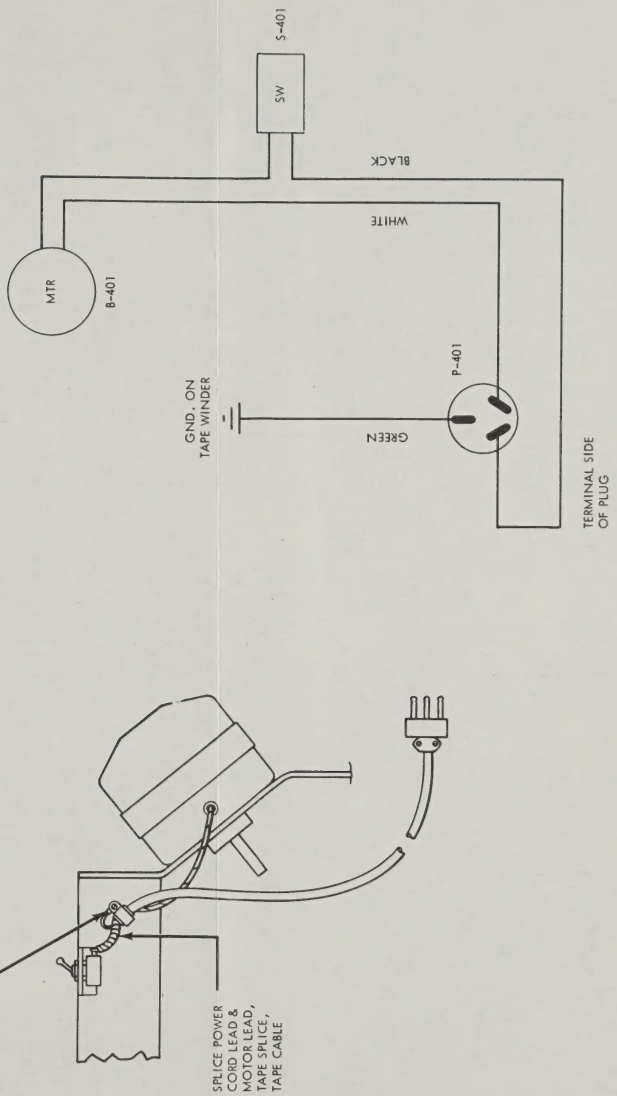

Figure 7—201. Reeling Machine RL-173/FGC, Wiring Diagram

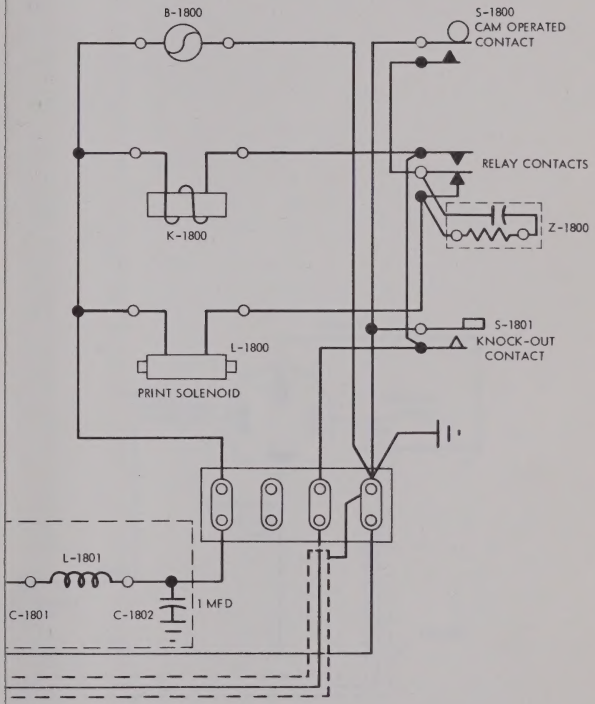

Figure 7—202. Time Stamp MX-1527/U, Wiring Diagram

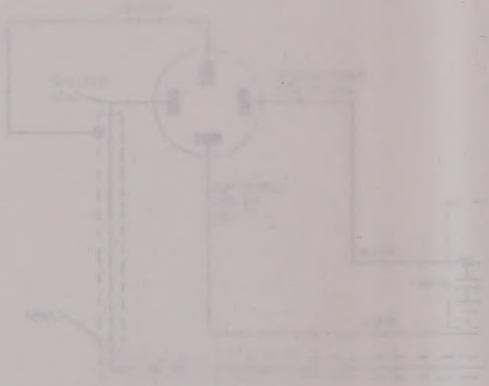

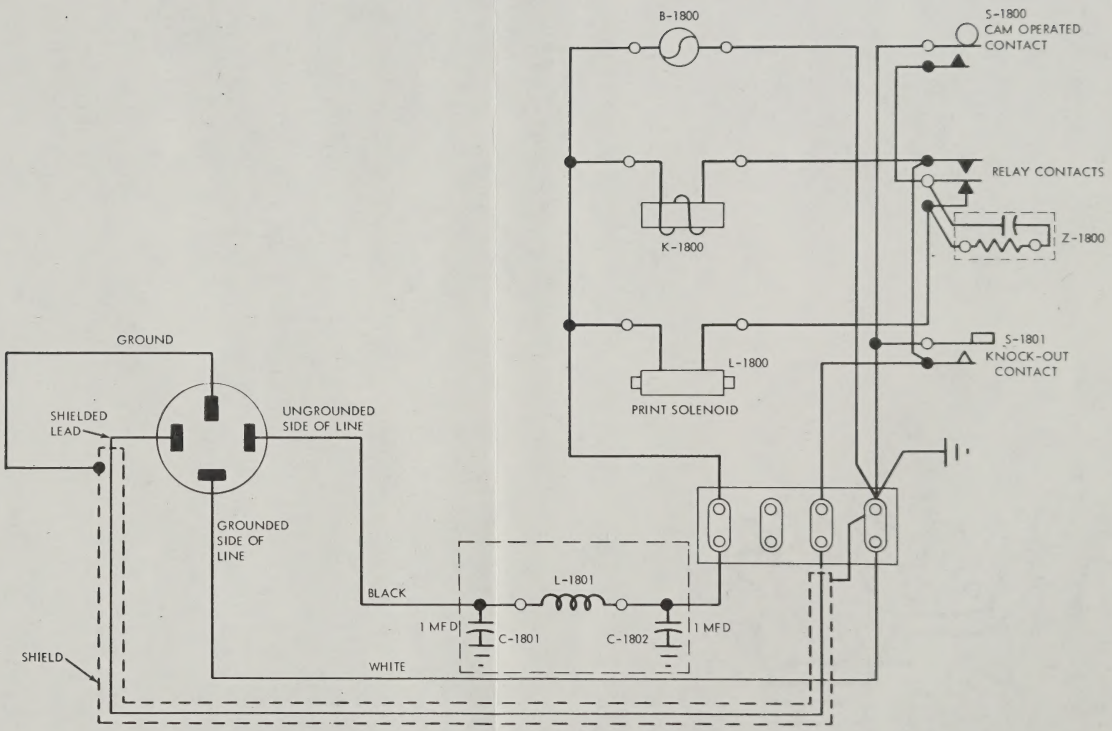

Figure 7—202. Time Stamp MX-1527/U, Wiring Diagram

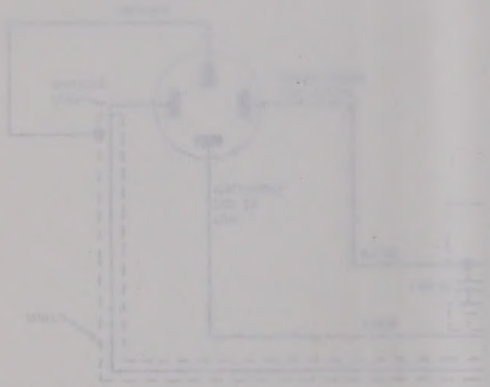

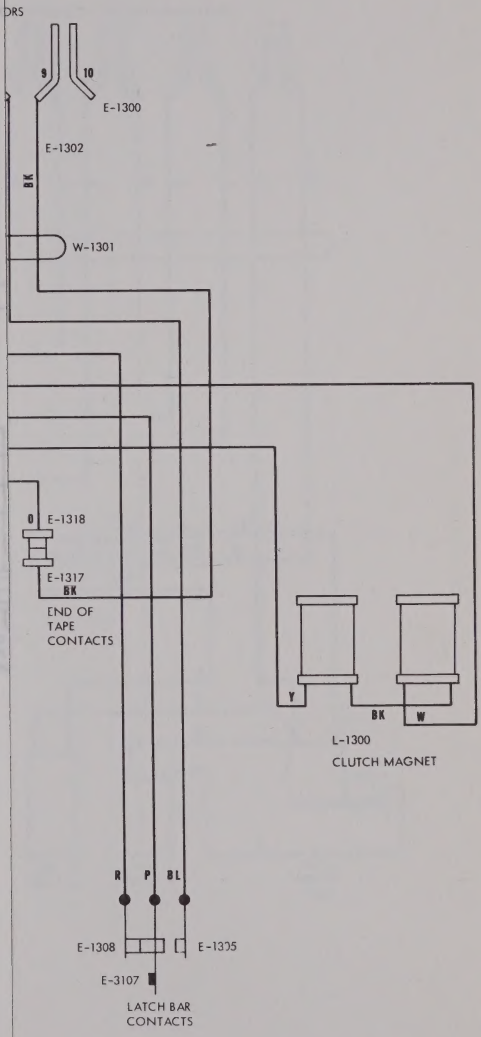

Figure 7—203. Distributor-Transmitter 59/FGC-38 and TT-170/FGC-39, Wiring Diagram

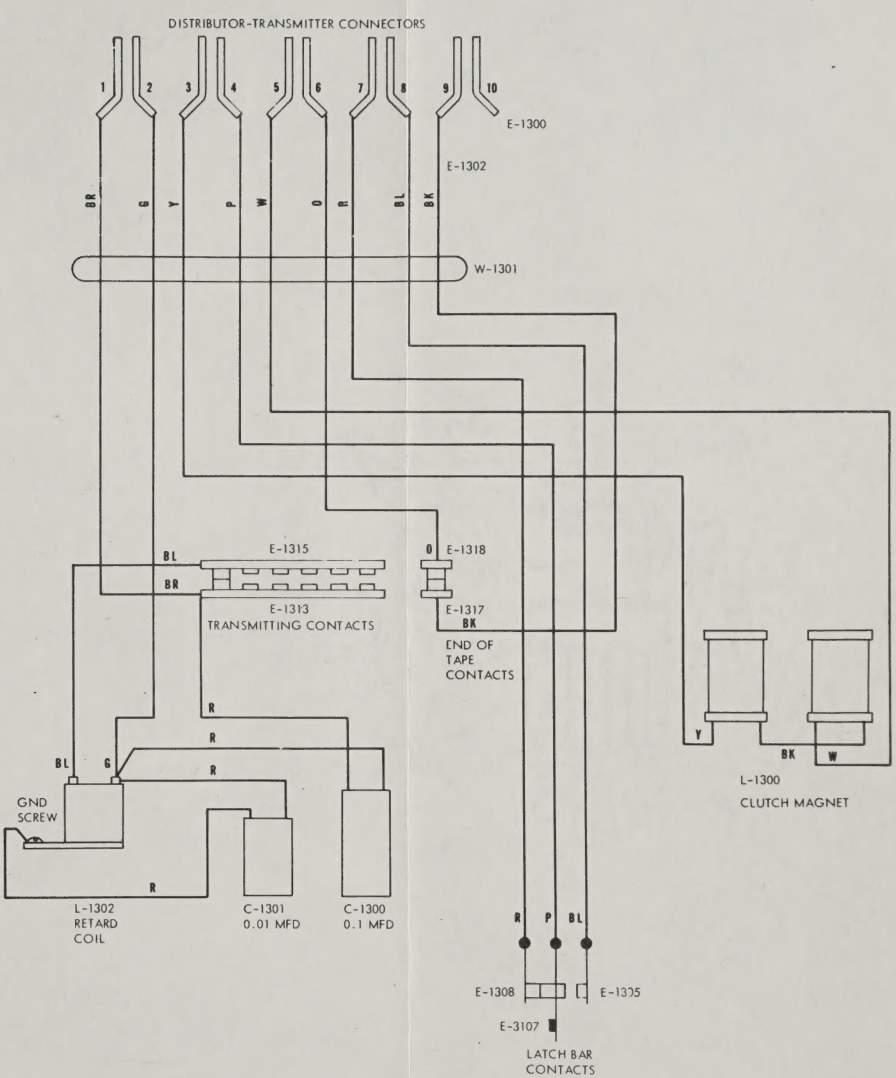

Figure 7—203. Distributor-Transmitter TT-169/FGC-38 and TT-170/FGC-39, Wiring Diagram

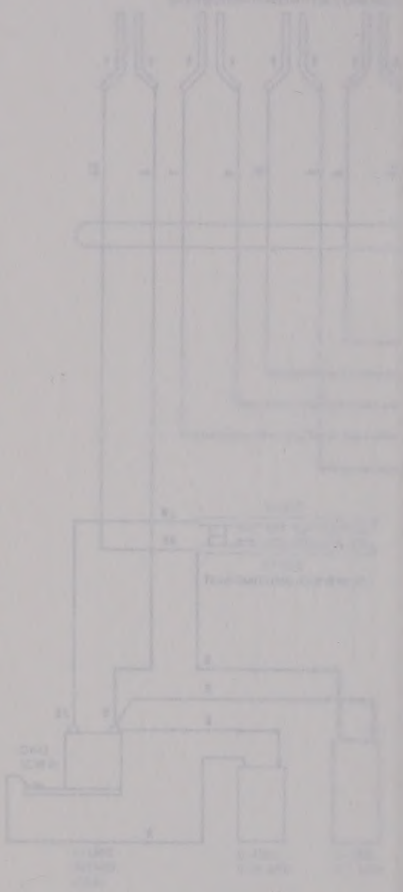

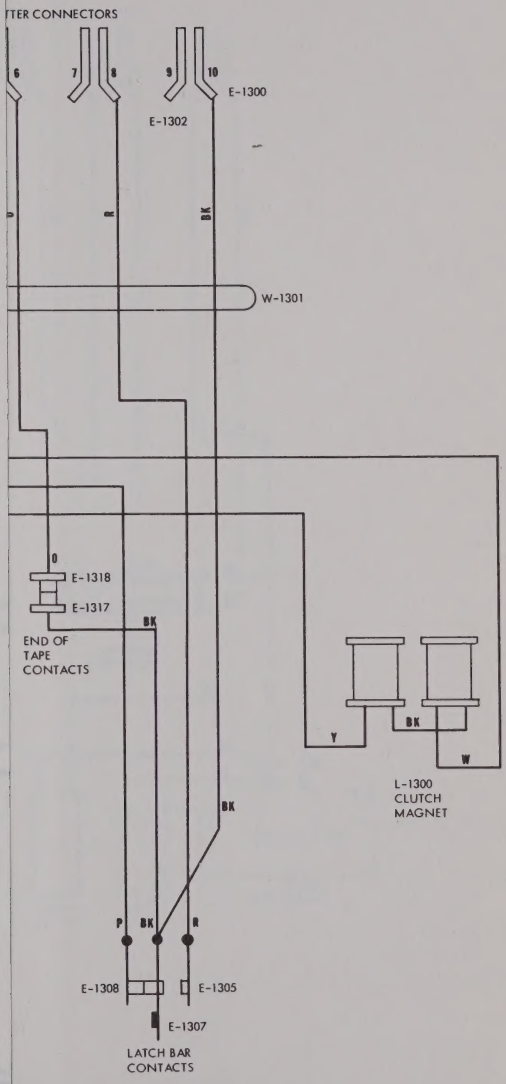

Figure 7—204. Distributor-Transmitter T-167/FGC-38 and TT-168/FGC-39, Wiring Diagram

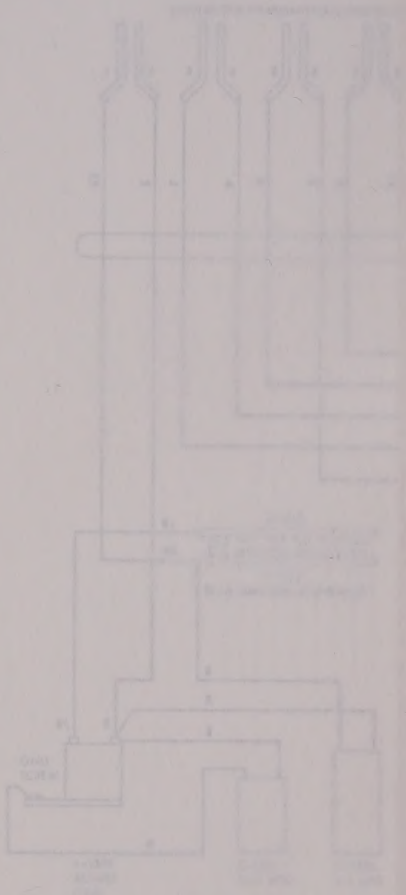

ORIGINAL

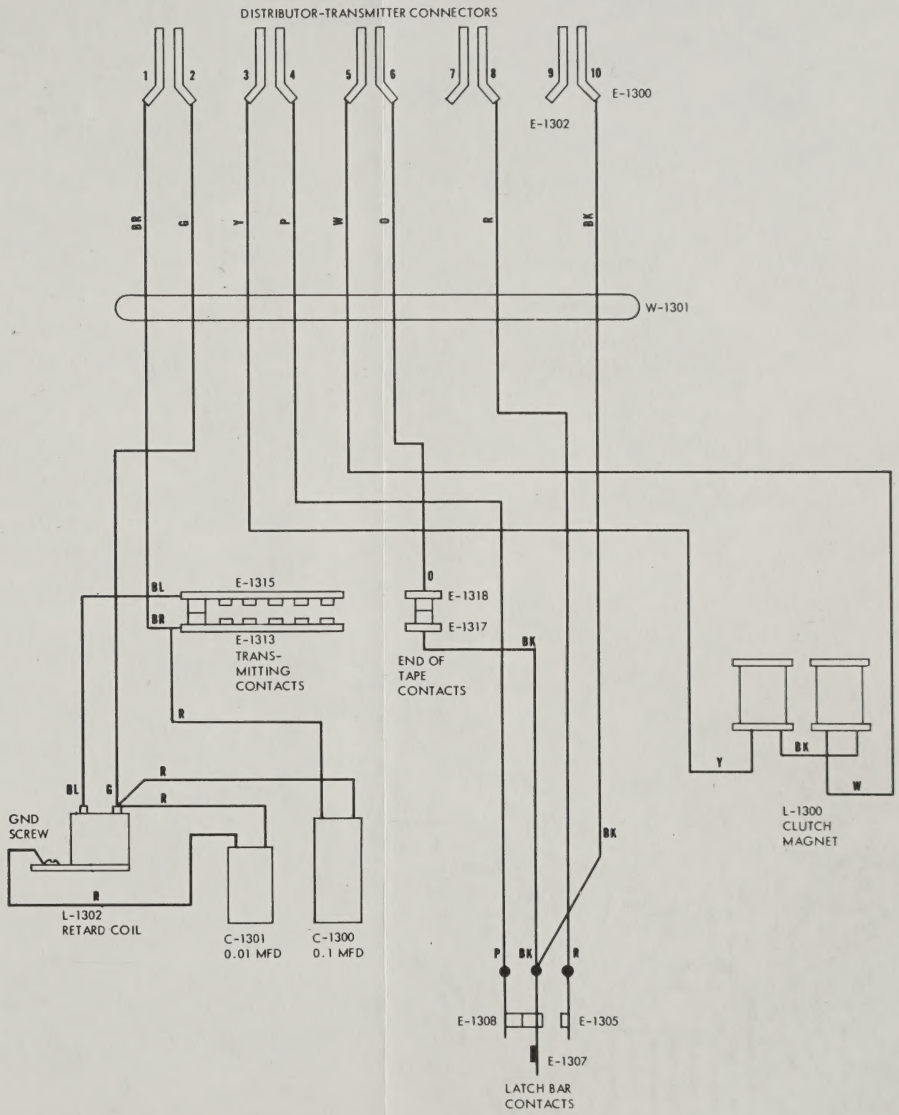

Figure 7—204. Distributor-Transmitter TT-167/FGC-38 and TT-168/FGC-39, Wiring Diagram

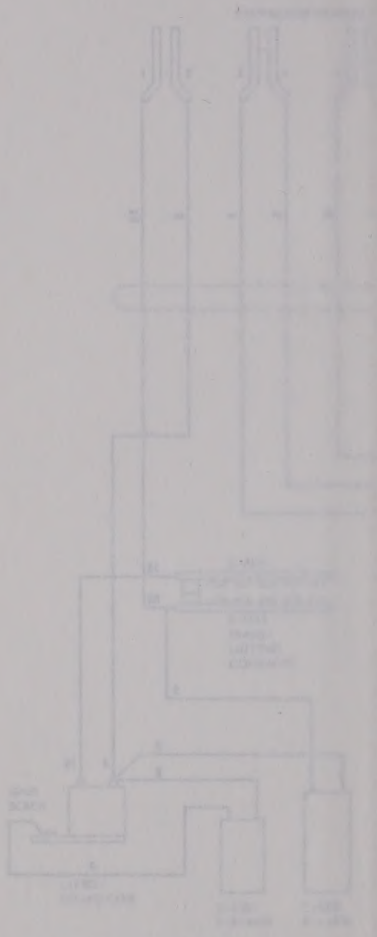

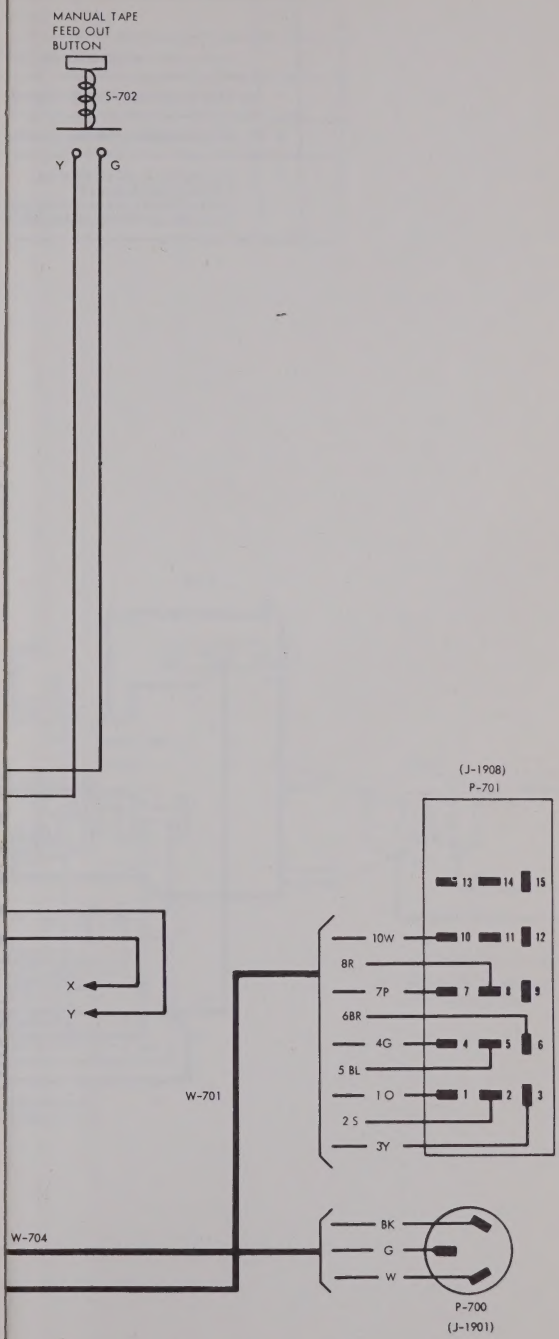

r Reperforator TT-161/FGC-38, TT-162/FGC-38X,
-163/FGC-39, Wiring Diagram

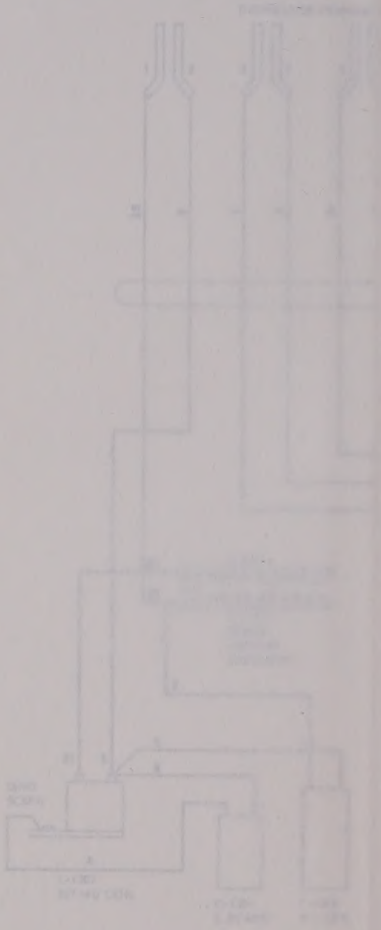

NO	NOTES
1	——————X DENOTES WIRES TAPED, OR SPLICED AND TAPED
2	MALE AND FEMALE CONNECTORS ARE SHOWN FROM PRONG AND SLOT ENDS
3	PLUG AND JACK REFERENCE SYMBOLS IN PARENTHESIS INDICATE MATING UNIT
4	FOR RELATED ILLUSTRATIONS SEE: 7-206-RECEIVER SCHEMATIC 7-193-RECEIVER CABINET WIRING DIAGRAM 7-154-DISTRIBUTOR-TRANSMITTER BASE, PARTS

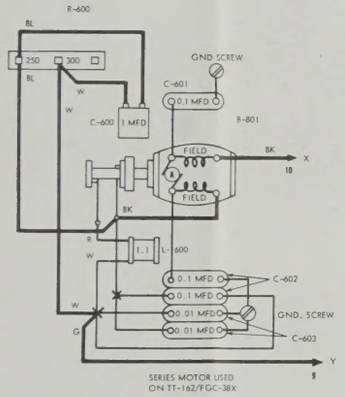

SERIES MOTOR USED ON TT-162/FGC-38X

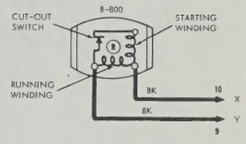

SYNCHRONOUS MOTOR

USED ON TT-161/FGC-38 AND TT-163/FGC-39

NAVSHIPS 92378
AN/FGC-38, AN/FGC-38X, AN/FGC-39

NAVSHIPS 92378
AN/FGC-38, AN/FGC-38X, AN/FGC-39

NAVSHIPS 92378
AN/FGC-38, AN/FGC-38X, AN/FGC-39

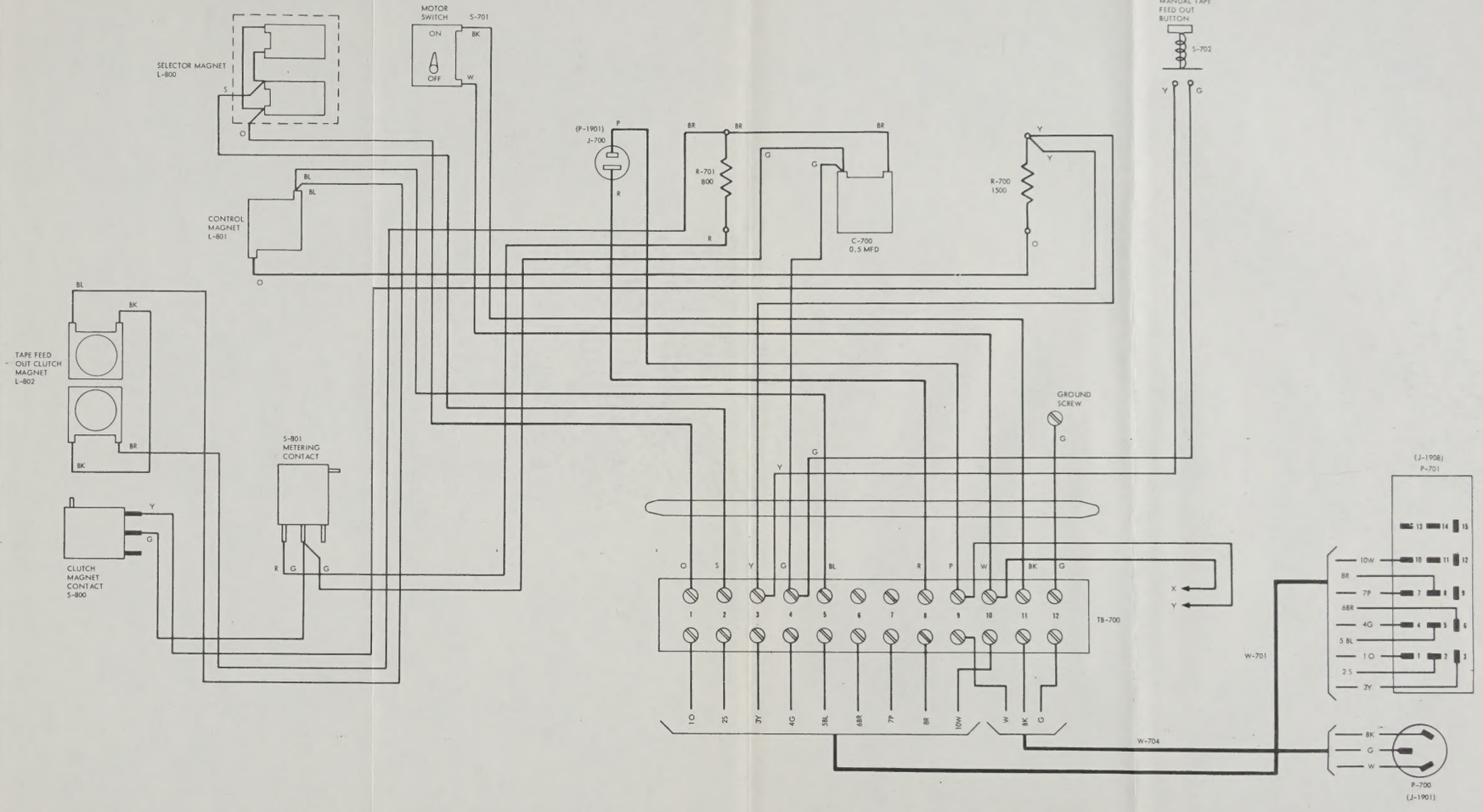

Figure 7—205. Receiver Reperforator TT-161/FGC-38, TT-162/FGC-38X, and TT-163/FGC-39, Wiring Diagram

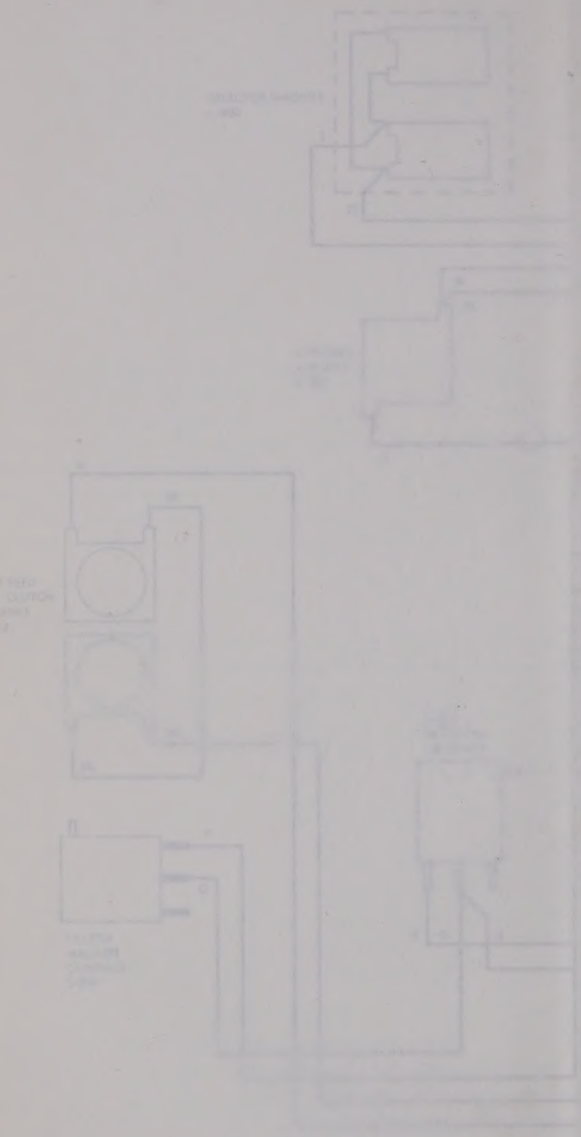

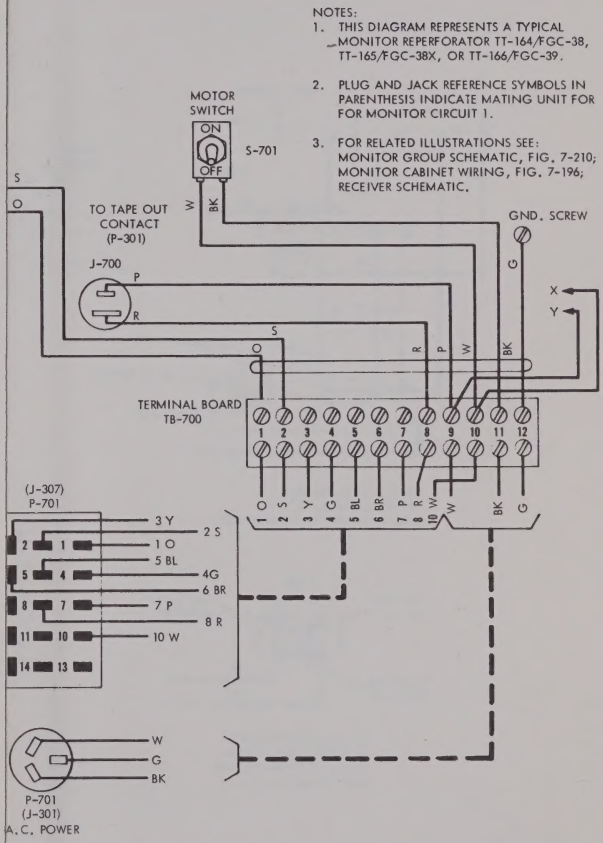

Figure 7—206. Monitor Reperforator, Wiring Diagram

NAVSHIPS 92378
AN/FGC-38, AN/FGC-38X, AN/FGC-39

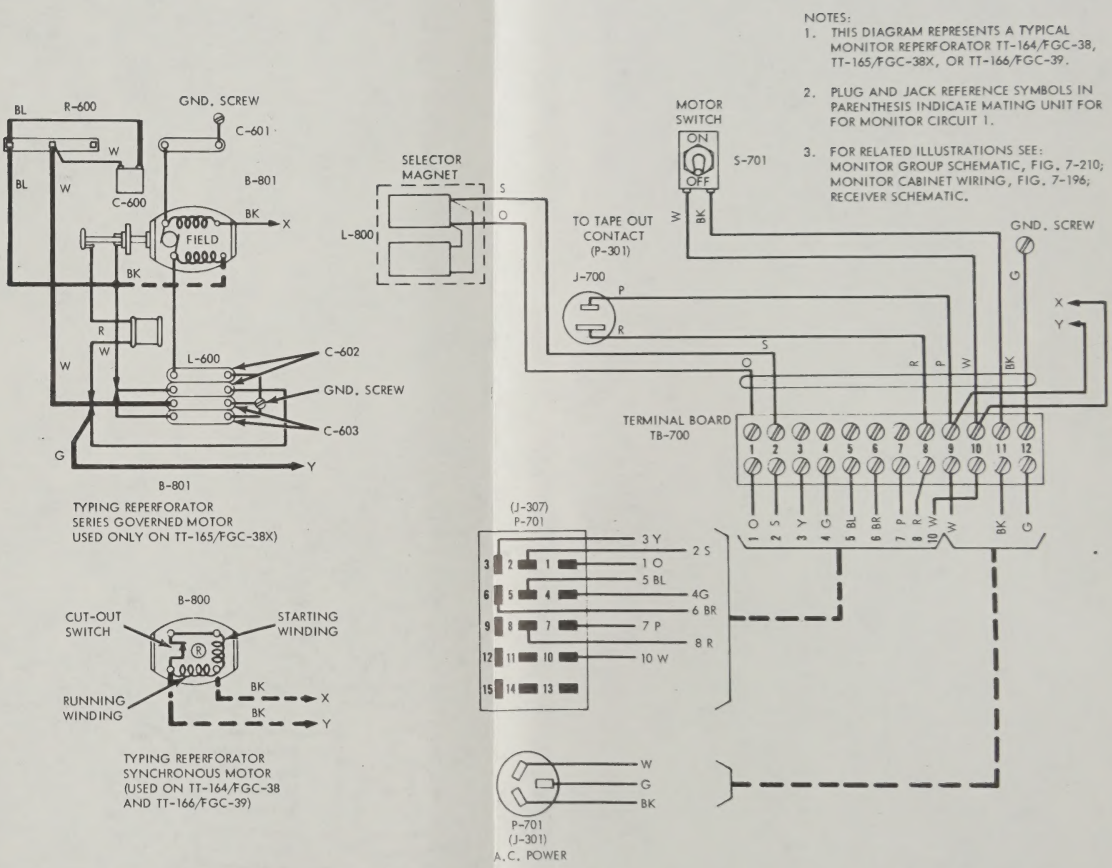

Figure 7—206. Monitor Reperforator, Wiring Diagram

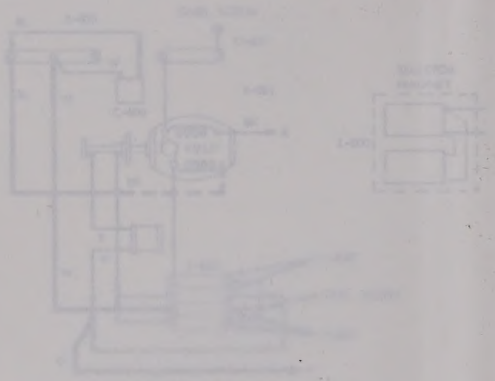

	NOTES
1	DENOTES WIRES TO BE SPLICED & TAPED
2	TRANSMITTER SCHEMATIC CABINET CY-1524/FGC WIRING DIAGRAM DISTRIBUTOR-TRANSMITTER WIRING DIAGRAM 7-179 BASE, BOTTOM VIEW 7-174 BASE ASSEMBLY 7-177 BASE COVERS 7-191 CABINET CY-1524/FGC PARTS 7-192 CABINET CY-1524/FGC PARTS
3	MALE CONNECTORS SHOWN FROM PRONG END
4	APPARATUS SHOWN DOTTED IS ON UNDERSIDE OF BASE
5	FOR FIELD CONVERSION TO 110 V D.C. REMOVE SHUNT FROM 10 OHM AND 300 OHM RESISTORS.

1501

P-1500

W-1500

W G BK

Y
27

POWER
SWITCH
S-1500

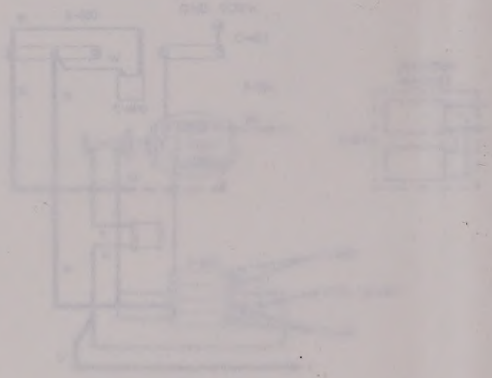

NAVSHIPS 92378
AN/FGC-38, AN/FGC-38X, AN/FGC-39

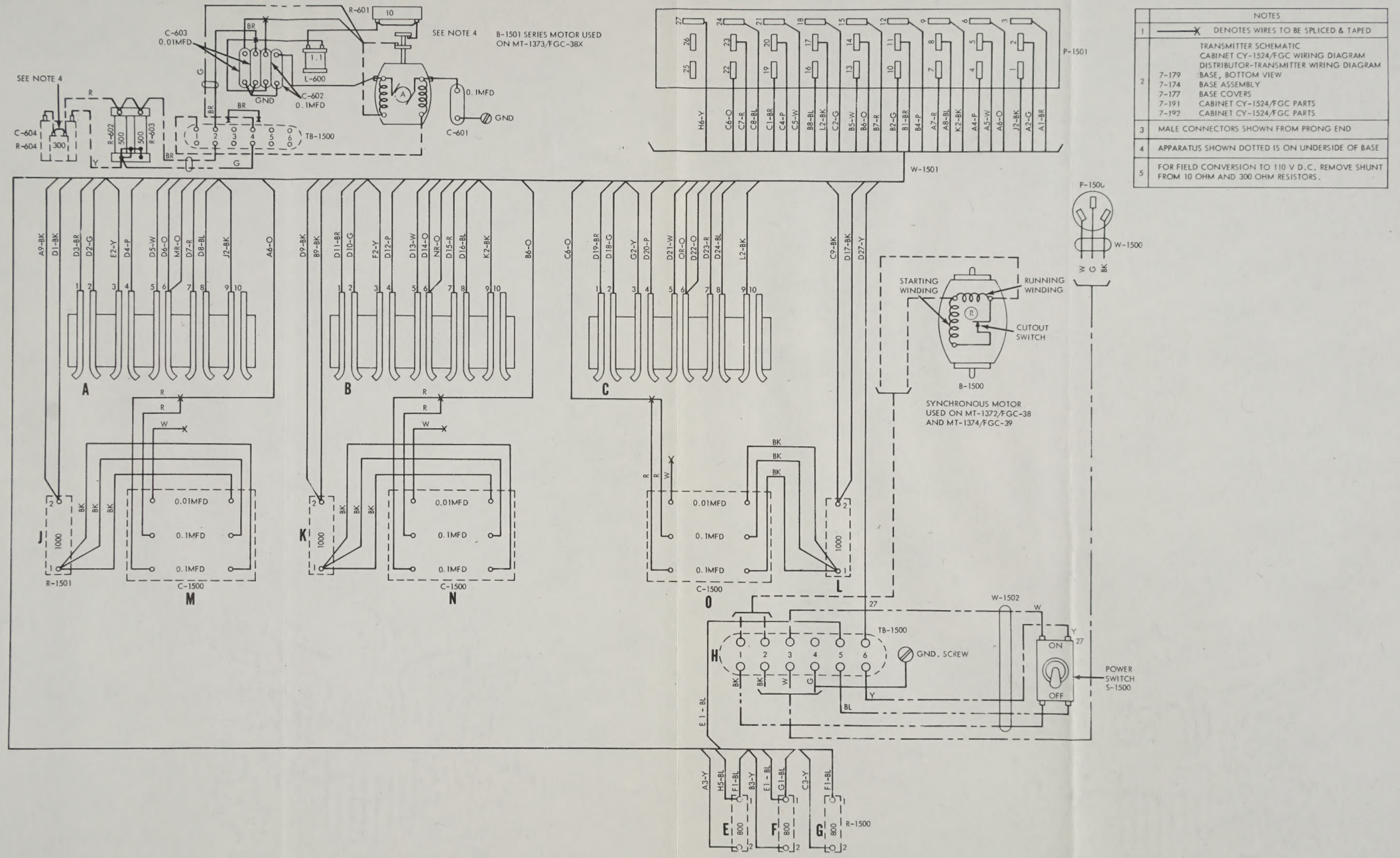

Figure 7—207. Distributor-Transmitter Base MT-1372/FGC-38, MT-1373/FGC-38X, and MT-1374/FGC-39, Wiring Diagram

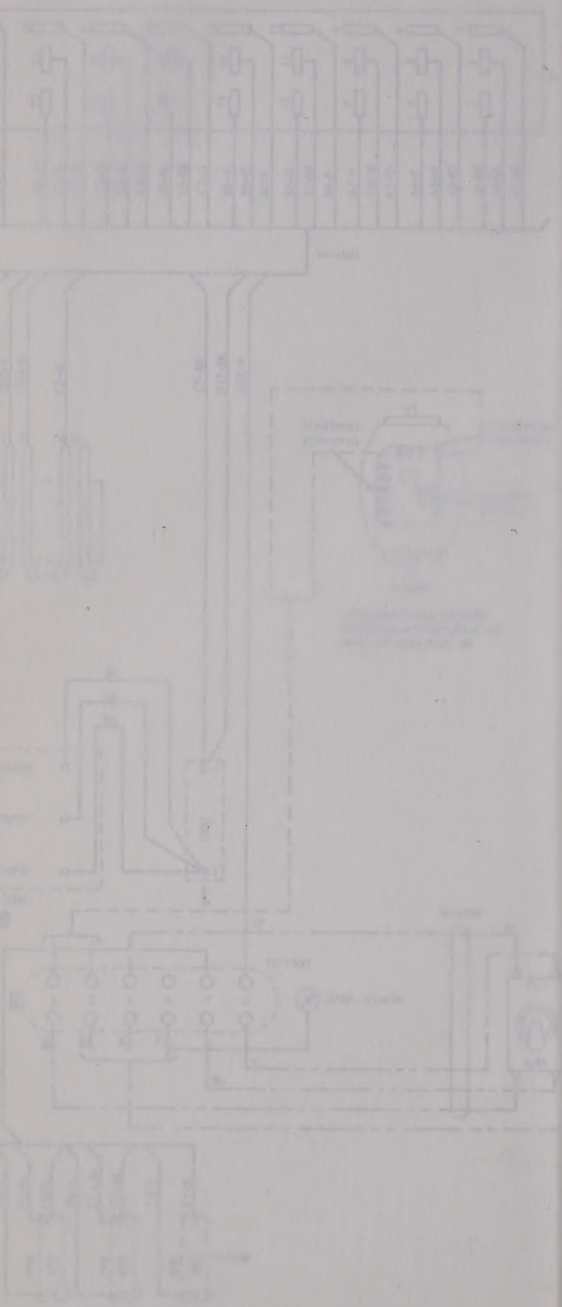

ure 7-207. Distributor-Transmitter Base MT-1372/FGC-3
Wiring Diagram

	NOTES:
1	——X DENOTES WIRES TO BE SPLICED AND TAPED
2	MALE CONNECTORS SHOWN FROM PRONG END.
3	APPARATUS SHOWN DOTTED IS ON UNDERSIDE OF BASE.
4	FOR D.C. OPERATION REMOVE SHUNT FROM 10 OHM & 300 OHM RESISTORS
5	FOR RELATED ILLUSTRATIONS SEE TRANSMITTER SCHEMATIC CABINET CY-1524/FGC WIRING DIAGRAM DISTRIBUTOR-TRANSMITTER WIRING DIAGRAM 7-179 BASE, BOTTOM VIEW 7-180 BASE ASSEMBLY 7-182 BASE COVERS 7-191 CABINET CY-1524/FGC PARTS 7-192 CABINET CY-1524/FGC PARTS

W-1700

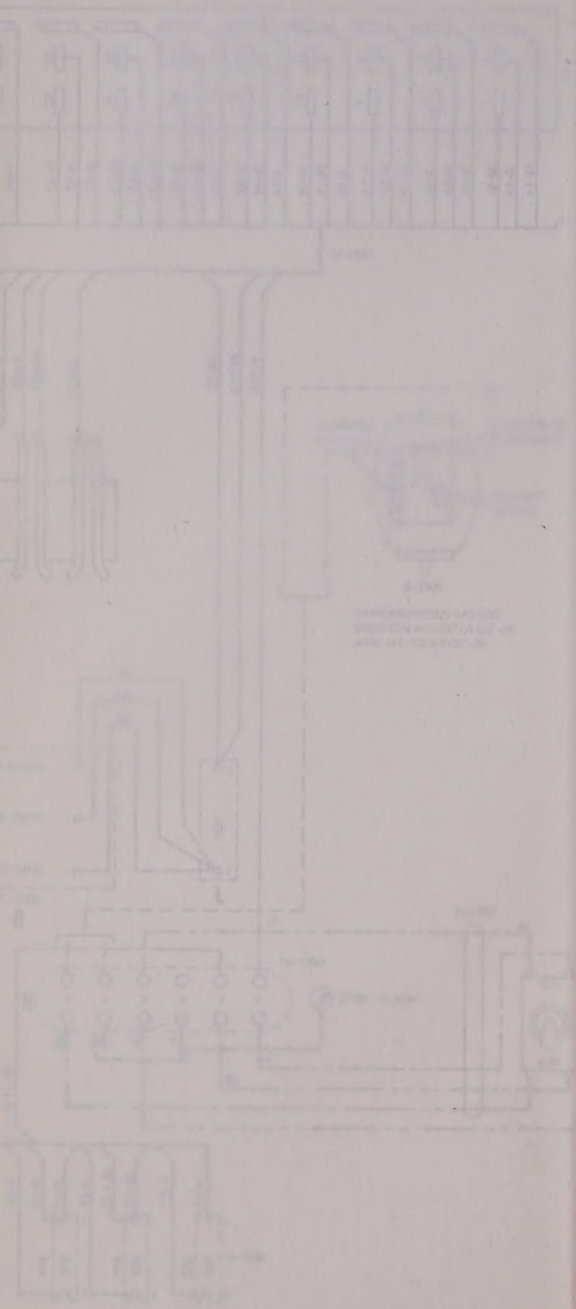

NAVSHIPS 92378
AN/FGC-38, AN/FGC-38X, AN/FGC-39

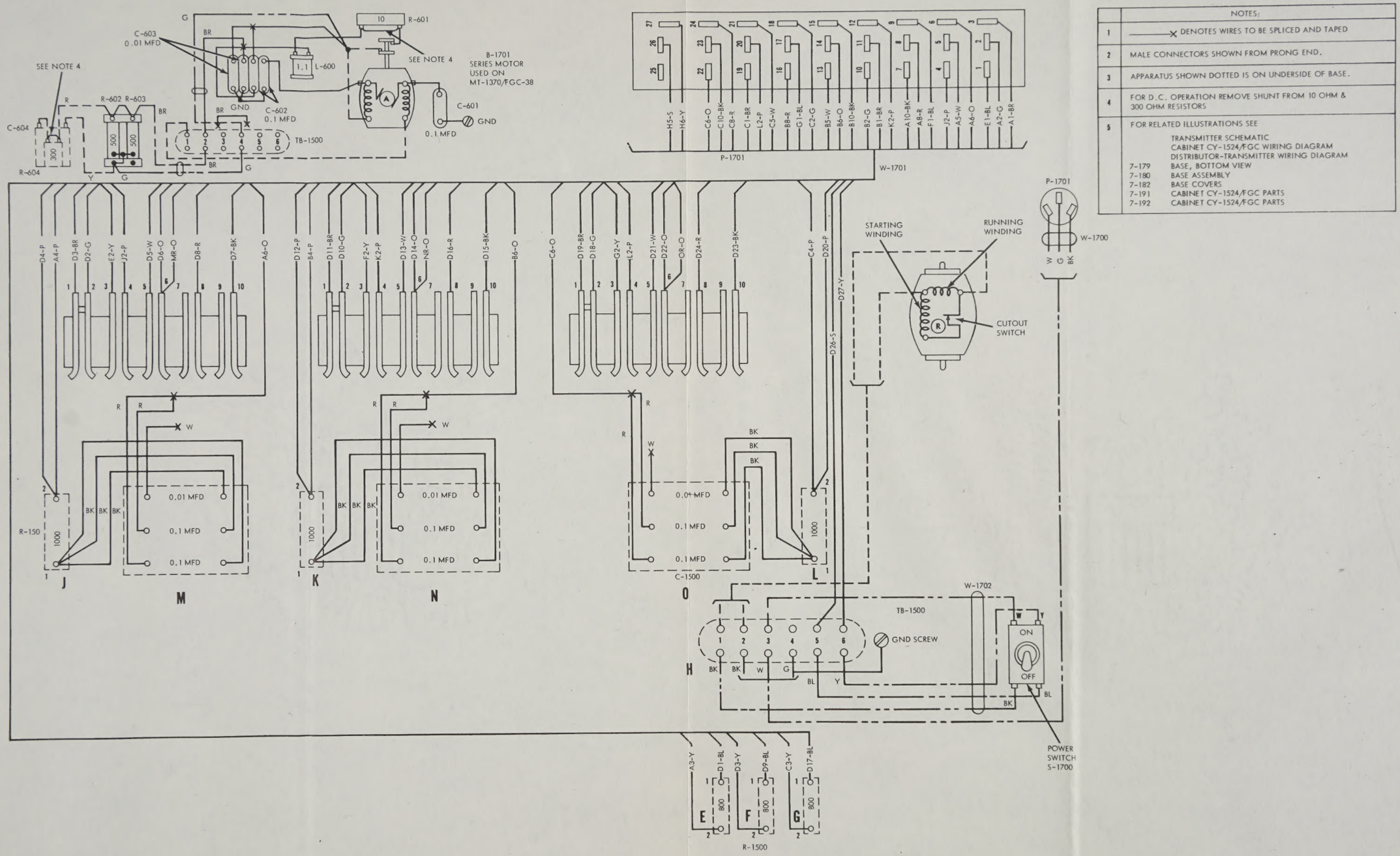

Figure 7—208. Distributor-Transmitter Base MT-1369/FGC-38, MT-1370/FGC-38X, and MT-1371/FGC-39, Wiring Diagram

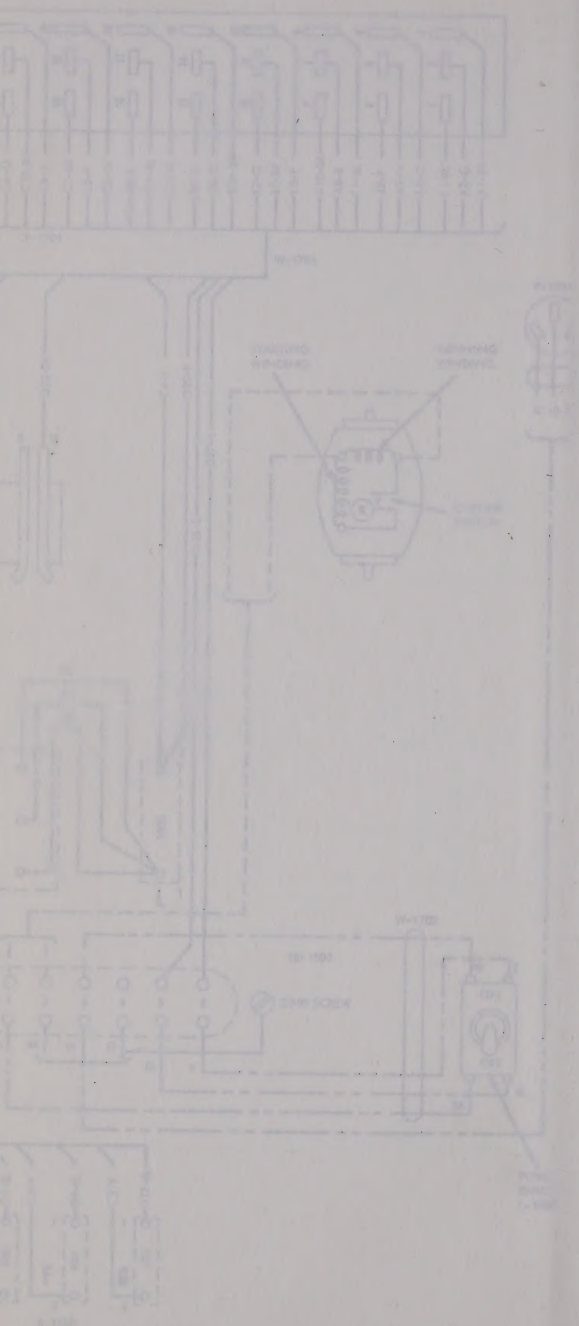

Figure 7-208. Distributor-Transmitter Set, MT-1369/FQC-
Wiring Diagram

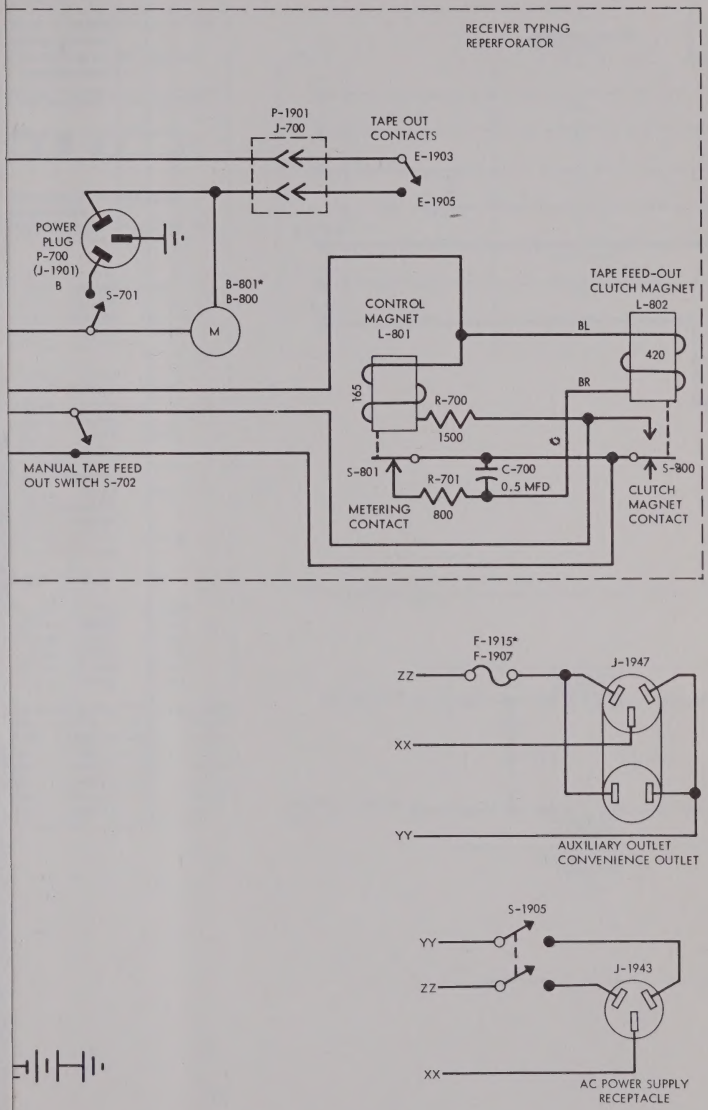

re 7—209. Receiver Group, Schematic Diagram

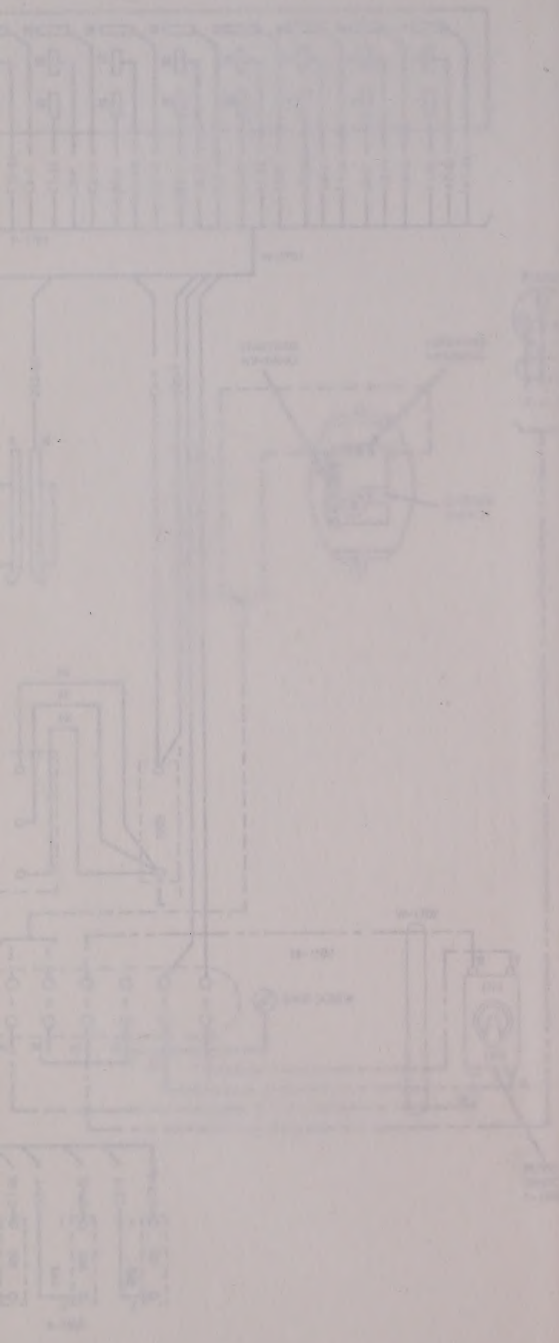

Figure 7-208. Distributor-Transmitter Base MT-1369/FOC-
Wiring Diagra

NAVSHIPS 92378
AN/FGC-38, AN/FGC-38X, AN/FGC-39
NAVSHIPS 92378
AN/FGC-38, AN/FGC-38X, AN/FGC-39

NO	NOTES
1	HEAVY LINES INDICATE SIGNAL CIRCUITS - LOCAL AND EXTERNAL
2	FEMALE AND MALE CONNECTORS ARE SHOWN FROM SLOT AND PRONG END
3	REFERENC - SYMBOLS IN PARENTHESIS INDICATE THE FIRST CIRCUIT OF THE MULTIPLE. TO DETERMINE THE REFERENCE SYMBOL FOR ANY OTHER CIRCUIT, SEE THE TABLE BELOW.
	TYPES OF RELAYS ARE DESIGNATED AS FOLLOWS: SLOW RELEASE RELAY HEEL END SLUG; POLAR RELAY
	RELAY CONTACTS ARE NUMBERED FROM CO'L OUT

A P-701 FPR SIG	CCT-1	J-1908	LEFT	
	CCT-3	J-1909		
	CCT-5	J-1910		
	CCT-2	J-1939		
	CCT-4	J-1940	RIGHT	
	CCT-6	J-1941		
B P-700 FPR PWR	CCT-1	J-1901	LEFT	
	CCT-3	J-1902		
	CCT-5	J-1903		
	CCT-2	J-1944	RIGHT	
	CCT-4	J-1945		
	CCT-6	J-1946		
C P-101 CONTROL PANEL	CCT-1	J-1906	LEFT	
	CCT-3	J-1907		
	CCT-5	J-1905		
	CCT-2	J-1936	RIGHT	
	CCT-4	J-1937		
	CCT-6	J-1938		

AN/FGC -	38,39	38X
FUSES	CCT-1 F-1901	F-1909*
	CCT-3 F-1903	F-1911
	CCT-5 F-1905	F-1913
	CCT-2 F-1902	F-1910
	CCT-4 F-1904	F-1912
	CCT-6 F-1906	F-1914

OPEN LINE RESET REAR	FRONT	OPEN LINE LAMPS REAR	FRONT
CCT-1 S-1902	S-1901	I-1907	I-1901
CCT-2 S-1903	S-1904	I-1912	I-1913
CCT-3 S-1902	S-1901	I-1906	I-1902
CCT-4 S-1903	S-1904	I-1911	I-1914
CCT-5 S-1902	S-1901	I-1905	I-1903
CCT-6 S-1903	S-1904	I-1910	I-1915

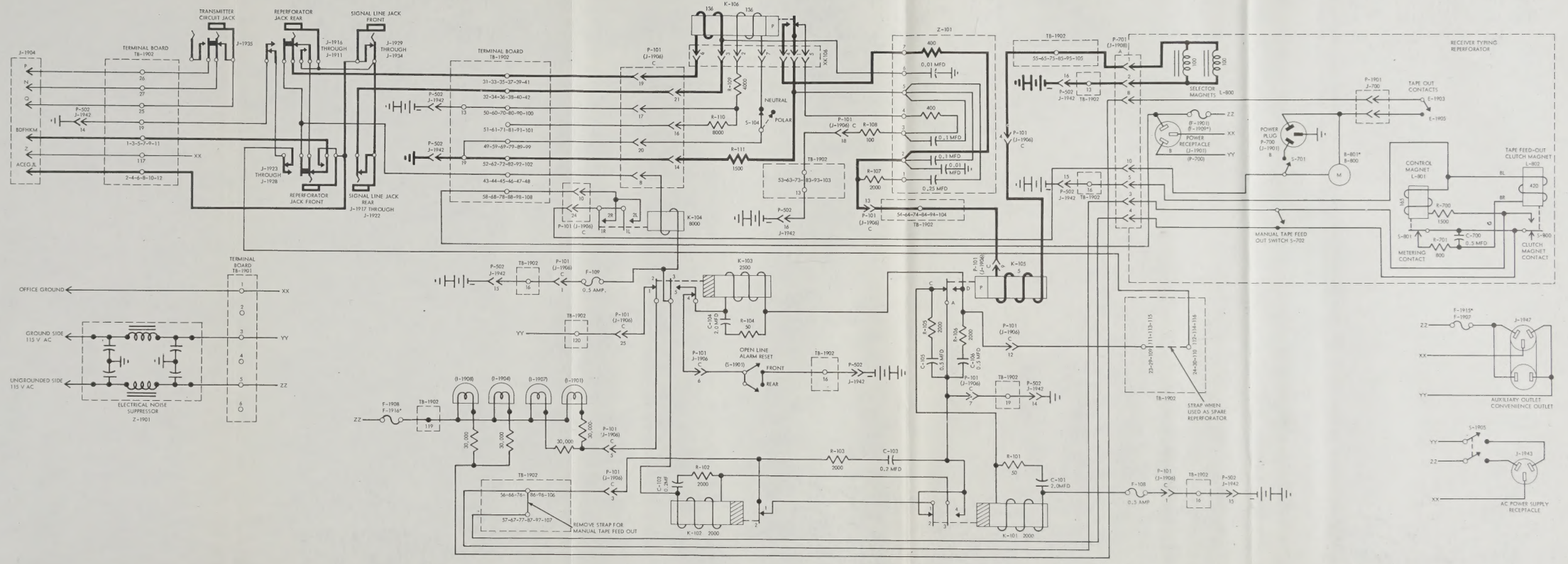

Figure 7—209. Receiver Group, Schematic Diagram

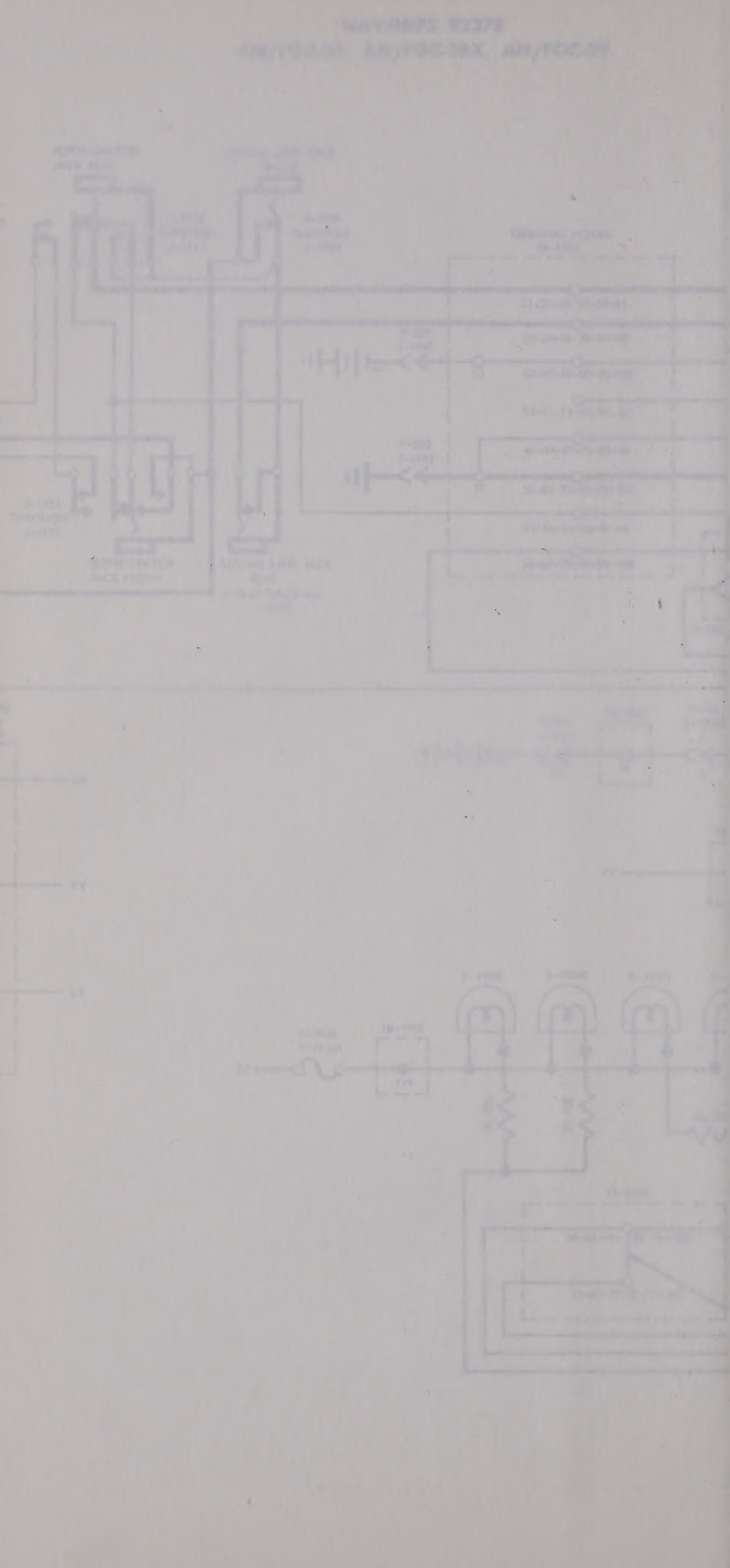

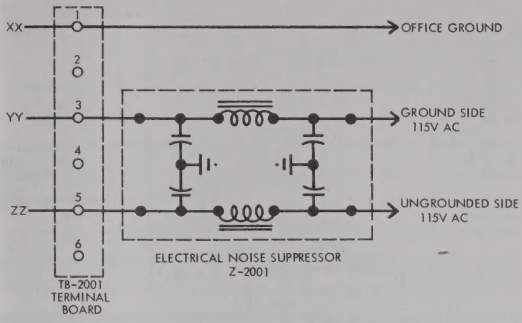

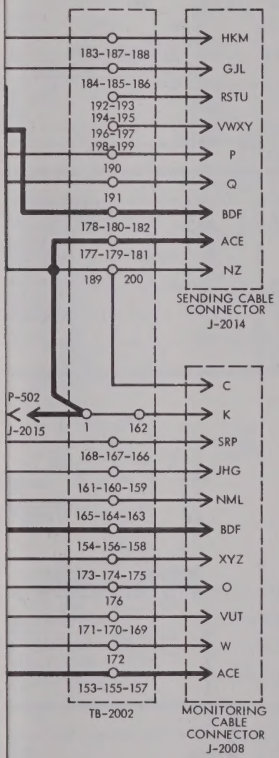

NO.	NOTES
1	*DENOTES EQUIPMENT USED ON AN/FGC-38X.
2	FEMALE AND MALE CONNECTORS ARE SHOWN FROM SLOT AND PRONG END.
3	CIRCUIT DESIGNATIONS ARE AS FOLLOWS: JLN—UPPER RELAY GROUP SLIP CONNECTIONS FOR CIRCUITS 1, 2 AND 3 RESPECTIVELY. KMP—LOWER RELAY GROUP SLIP CONNECTIONS FOR CIRCUITS 1, 2 AND 3 RESPECTIVELY.
4	TYPES OF RELAY ARE DESIGNATED AS FOLLOWS: 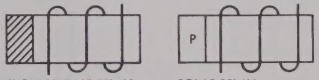 SLOW RELEASE RELAY HEEL END SLUG POLAR RELAY RELAY CONTACTS ARE NUMBERED FROM COIL OUT.
5	HEAVY LINES INDICATE SIGNAL CIRCUITS—LOCAL AND EXTERNAL.
6	THIS DIAGRAM REPRESENTS ONE CIRCUIT OF THE TRANSMITTER GROUP. CIRCUIT DESIGNATIONS AND REFERENCE SYMBOLS FOR ALL THE TRANSMITTER CIRCUITS ARE GIVEN IN ORDER.
7	PLUG AND JACK REFERENCE SYMBOLS IN PARENTHESIS INDICATE MATING UNIT.
8	FOR RELATED ILLUSTRATIONS SEE: 7-194 CABINET CY-1524/FGC WIRING DIAGRAM 7-196 CONTROL PANEL SB-358/FGC WIRING DIAGRAM. 7-204 DISTRIBUTOR TRANSMITTER BASE WIRING DIAGRAM. 7-205 DISTRIBUTOR TRANSMITTER BASE WIRING DIAGRAM. 7-201 TELETYPEWRITER DISTRIBUTOR TRANSMITTER WIRING DIAGRAM. 7-201A TELETYPEWRITER DISTRIBUTOR TRANSMITTER WIRING DIAGRAM.

XX

YY

BASE

-210. *Transmitter Group, Schematic Diagram*

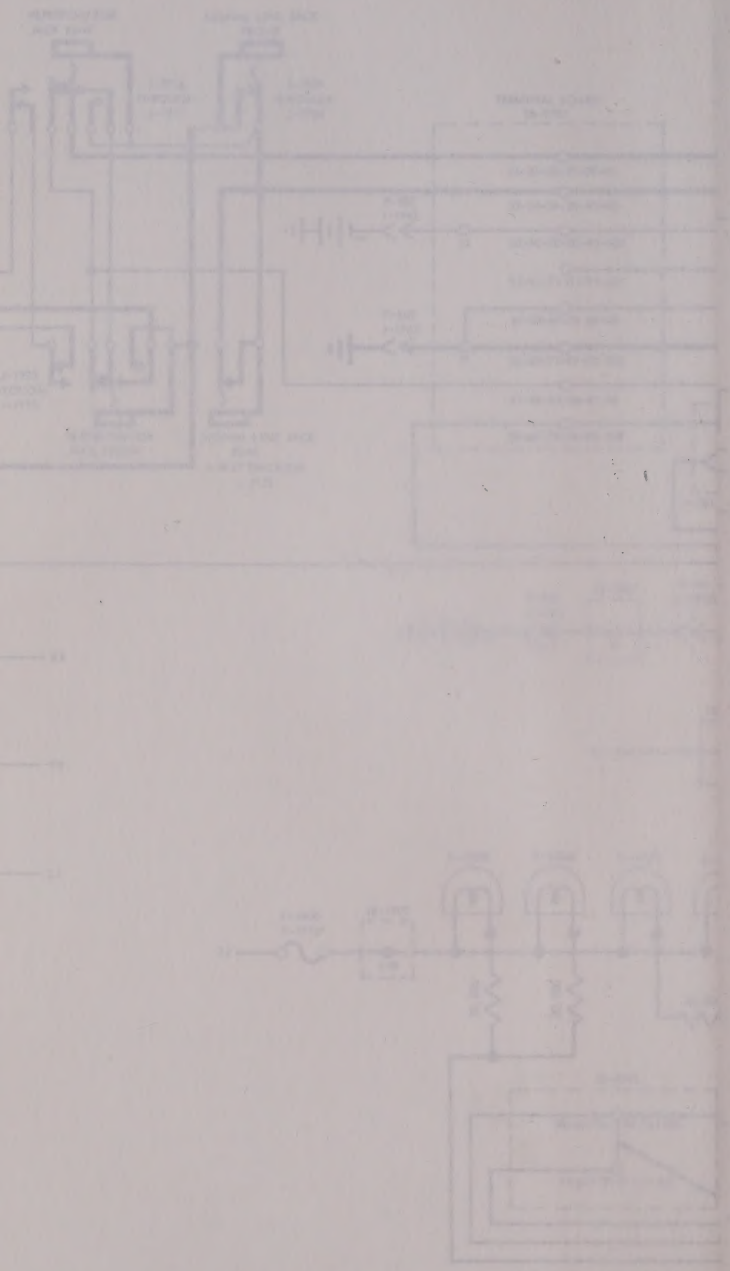

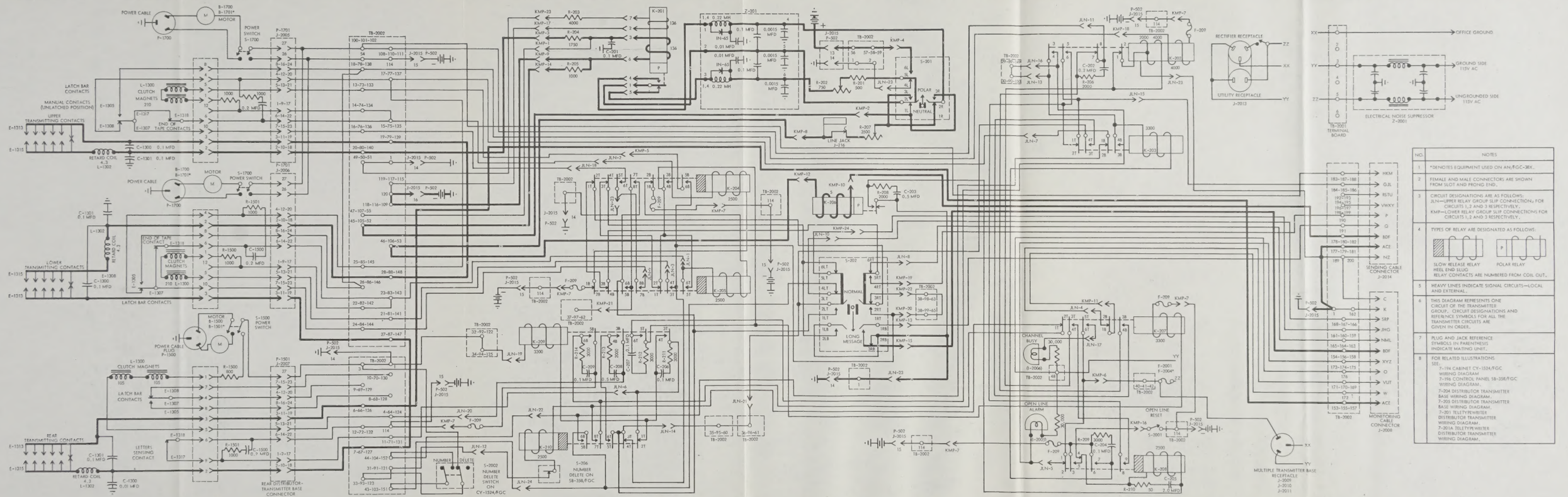

NO.	NOTES
1	*DENOTES EQUIPMENT USED ON AN/FGC-38X.
2	FEMALE AND MALE CONNECTORS ARE SHOWN FROM SLOT AND PRONG END.
3	CIRCUIT DESIGNATIONS ARE AS FOLLOWS: JLN—UPPER RELAY GROUP SLIP CONNECTIONS, FOR CIRCUITS 1, 2 AND 3 RESPECTIVELY. KMP—LOWER RELAY GROUP SLIP CONNECTIONS FOR CIRCUITS 1, 2 AND 3 RESPECTIVELY.
4	TYPES OF RELAY ARE DESIGNATED AS FOLLOWS: SLOW RELEASE RELAY (REEL END SLUG) POLAR RELAY. RELAY CONTACTS ARE NUMBERED FROM COIL OUT.
5	HEAVY LINES INDICATE SIGNAL CIRCUITS—LOCAL AND EXTERNAL.
6	THIS DIAGRAM REPRESENTS ONE CIRCUIT OF THE TRANSMITTER GROUP. CIRCUIT DESIGNATIONS AND REFERENCE SYMBOLS FOR ALL THE TRANSMITTER CIRCUITS ARE GIVEN IN ORDER.
7	PLUG AND JACK REFERENCE SYMBOLS IN PARENTHESIS INDICATE MATING UNIT.
8	FOR RELATED ILLUSTRATIONS SEE: 7-194 CABINET CY-1524/FGC WIRING DIAGRAM. 7-196 CONTROL PANEL SB-358/FGC WIRING DIAGRAM. 7-204 DISTRIBUTOR TRANSMITTER BASE WIRING DIAGRAM. 7-205 DISTRIBUTOR TRANSMITTER BASE WIRING DIAGRAM. 7-206 TELETYPEWRITER DISTRIBUTOR TRANSMITTER WIRING DIAGRAM. 7-207A TELETYPEWRITER DISTRIBUTOR TRANSMITTER WIRING DIAGRAM.

Figure 7—210. Transmitter Group, Schematic Diagram

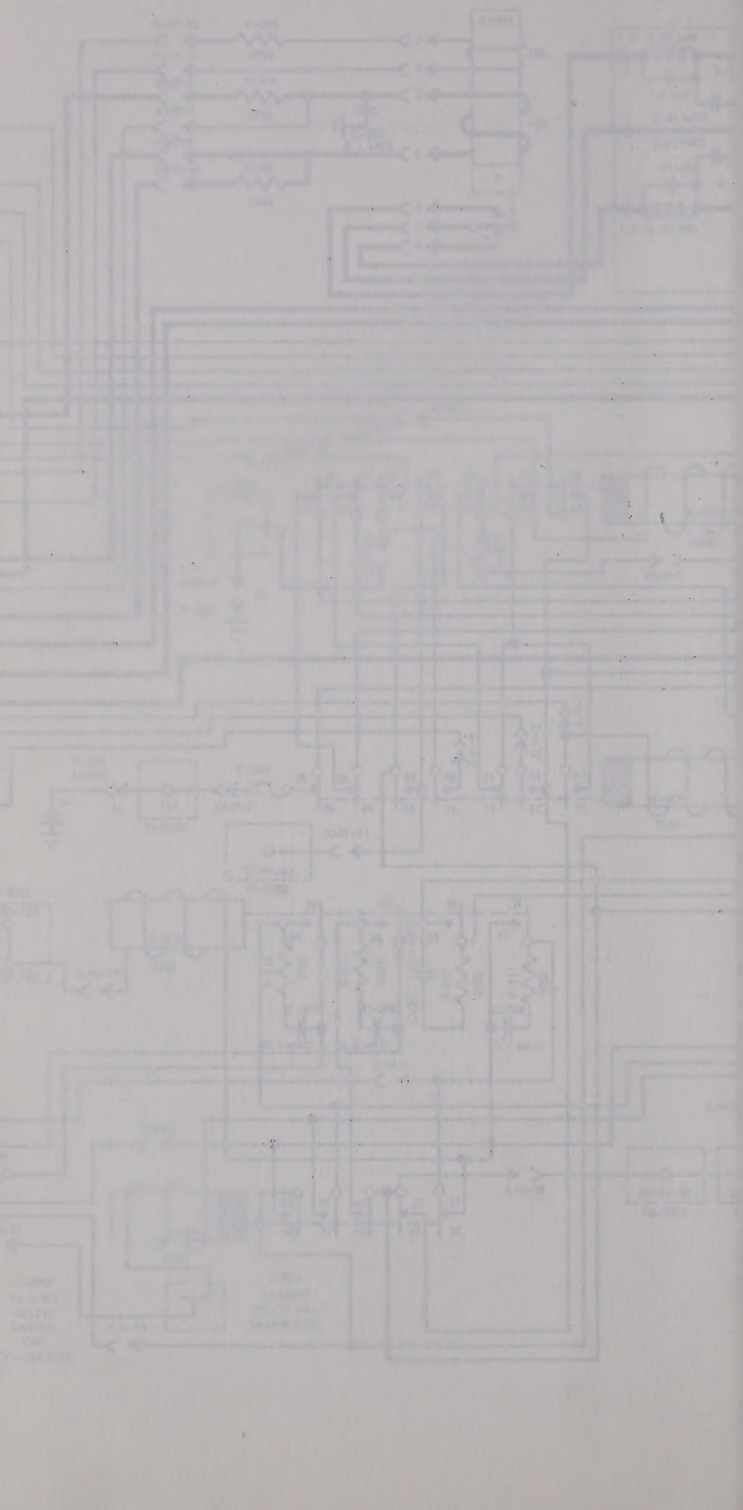

OTE 1

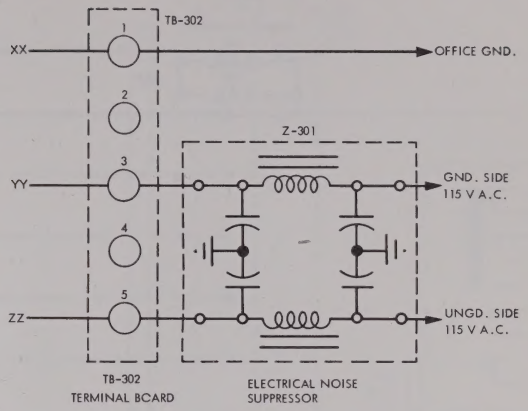

	NOTES:
1.	THIS DIAGRAM REPRESENTS ONE CIRCUIT OF THE MONITOR GROUP. CIRCUIT DESIGNATIONS AND REFERENCE SYMBOLS FOR ALL THREE MONITOR CIRCUITS OR LEVELS ARE GIVEN IN ORDER: CIRCUIT 1 (UPPER LEVEL), CIRCUIT 2 (MIDDLE LEVEL), CIRCUIT 3 (LOWER LEVEL).
2.	PLUG AND JACK REFERENCE SYMBOLS IN PARENTHESIS INDICATE MATING UNIT.
3.	*DENOTES EQUIPMENT USED ON AN/FGC-38X.
4.	FOR RELATED ILLUSTRATIONS SEE: 7-195 - MONITOR CABINET WIRING DIAGRAM 7-203 - MONITOR REPERFORATOR WIRING DIAGRAM
5.	SEQUENCES REPRESENT UPPER, MIDDLE AND LOWER LEVEL RESPECTIVELY
6.	FEMALE AND MALE CONNECTORS ARE SHOWN FROM SLOT AND PRONG END

Figure 7—211. Monitor Group, Schematic Diagram

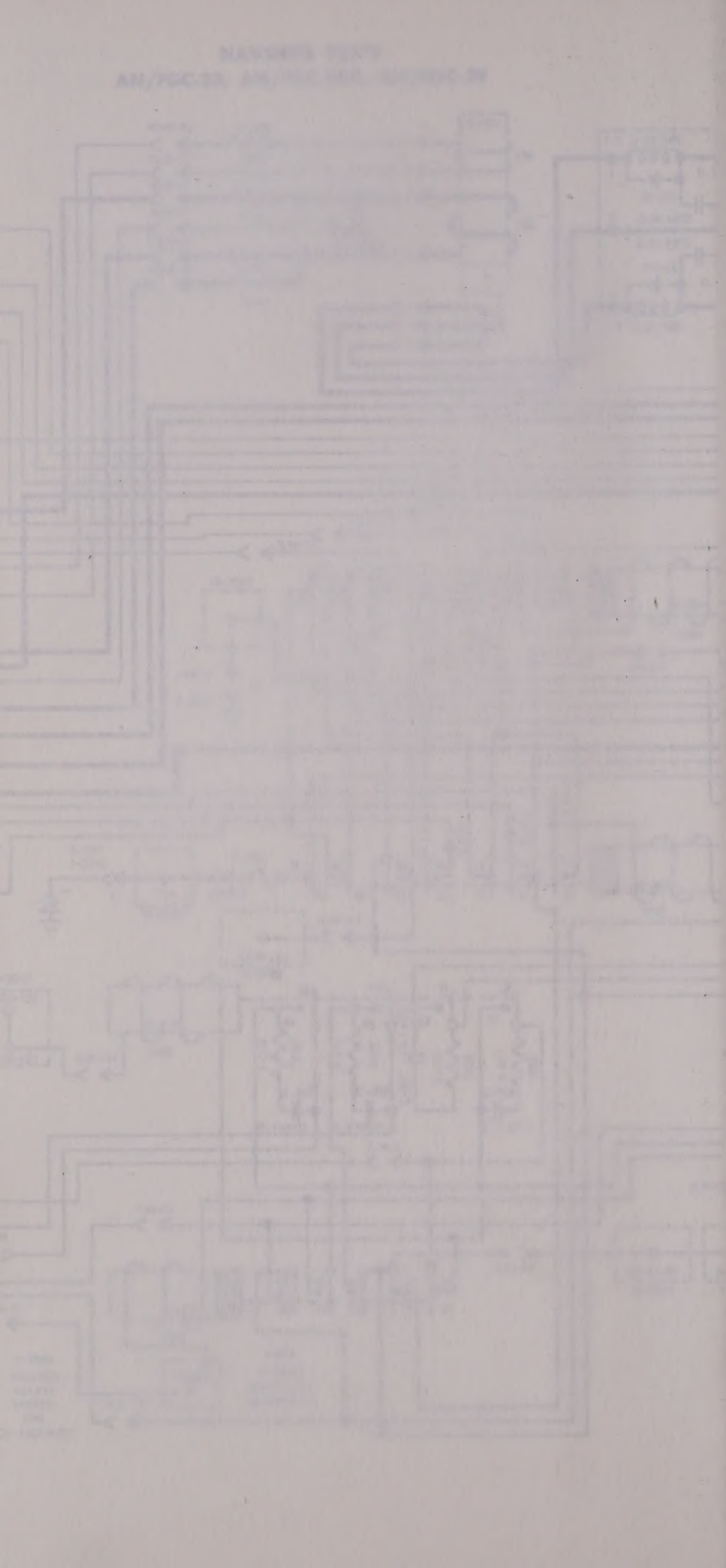

NAVSHIPS 92378
AN/FGC-38, AN/FGC-38X, AN/FGC-39

NAVSHIPS 92378
AN/FGC-38, AN/FGC-38X, AN/FGC-39

NAVSHIPS 92378
AN/FGC-38, AN/FGC-38X, AN/FGC-39

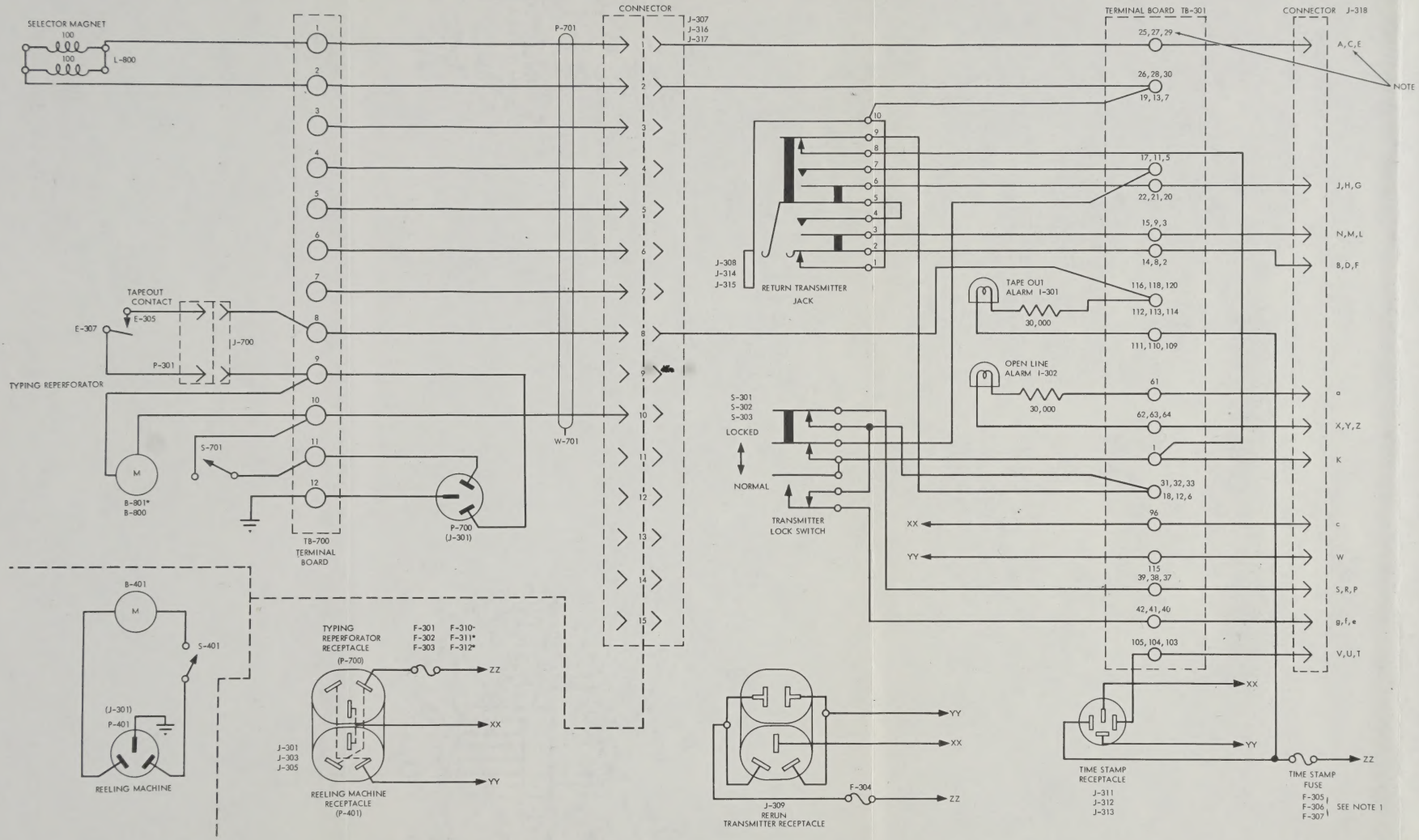

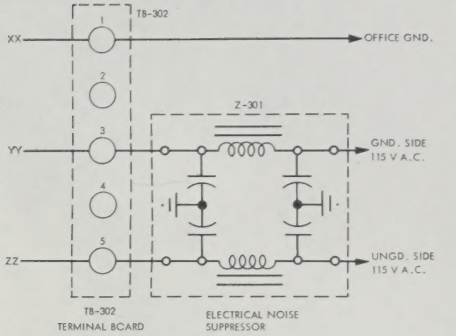

NOTES:	
1.	THIS DIAGRAM REPRESENTS ONE CIRCUIT OF THE MONITOR GROUP. CIRCUIT DESIGNATIONS AND REFERENCE SYMBOLS FOR ALL THREE MONITOR CIRCUITS OR LEVELS ARE GIVEN IN ORDER: CIRCUIT 1 (UPPER LEVEL), CIRCUIT 2 (MIDDLE LEVEL), CIRCUIT 3 (LOWER LEVEL).
2.	PLUG AND JACK REFERENCE SYMBOLS IN PARENTHESIS INDICATE MATING UNIT.
3.	*DENOTES EQUIPMENT USED ON AN/FGC-38X.
4.	FOR RELATED ILLUSTRATIONS SEE: 7-195 - MONITOR CABINET WIRING DIAGRAM 7-203 - MONITOR REPERFORATOR WIRING DIAGRAM
5.	SEQUENCES REPRESENT UPPER, MIDDLE AND LOWER LEVEL RESPECTIVELY
6.	FEMALE AND MALE CONNECTORS ARE SHOWN FROM SLOT AND PRONG END

Figure 7—211. Monitor Group, Schematic Diagram

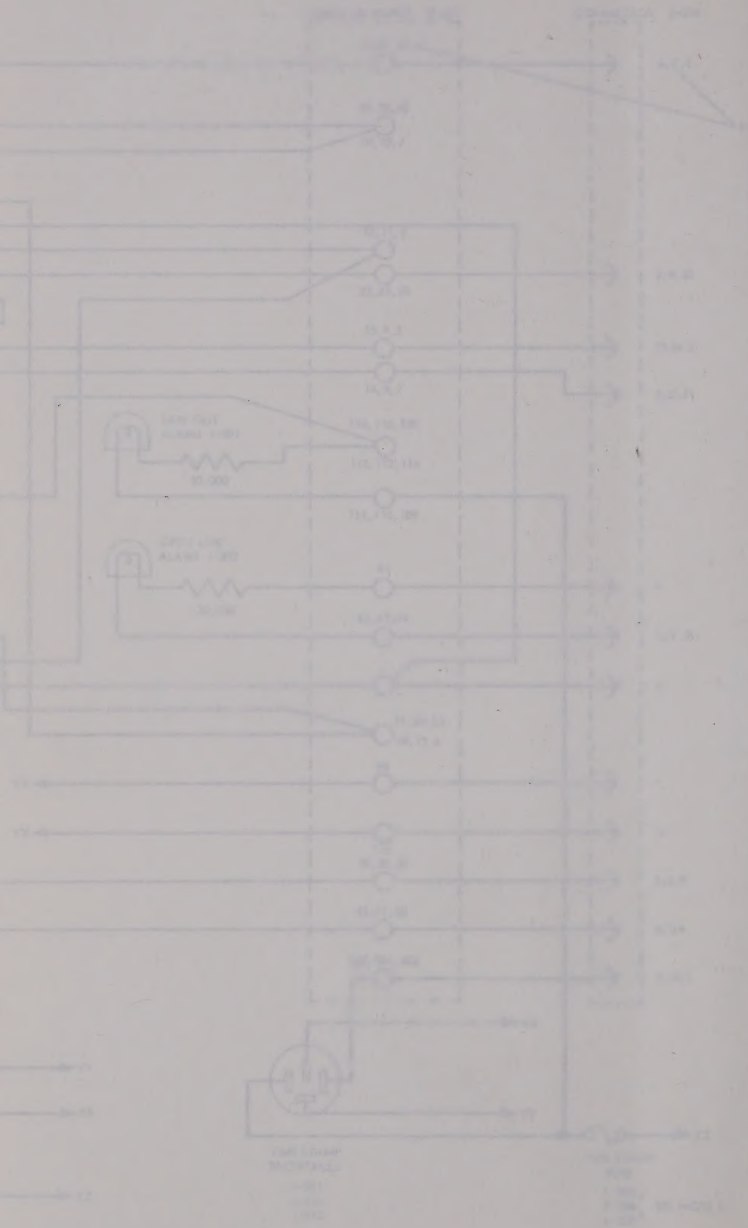

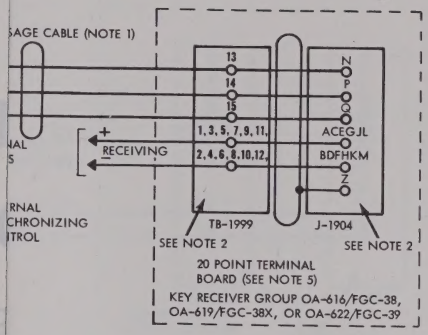

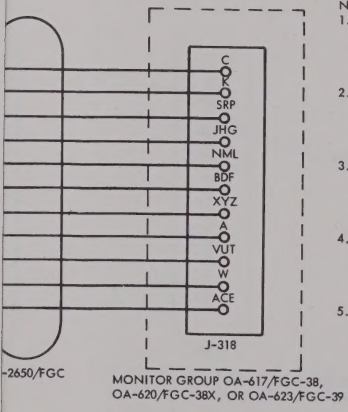

NOTES:
1. LONG MESSAGE CABLE OPTIONAL - NOT SUPPLIED AS PART OF AN/FGC-38, AN/FGC-38X, OR AN/FGC-39.
2. SERIES OF LETTERS OR NUMBERS INDICATE CONNECTIONS FOR SIGNAL LINES 1, 2, 3, 4, 5, AND 6 RESPECTIVELY.
3. SERIES OF LETTERS OR NUMBERS INDICATE CONNECTIONS FOR SIGNAL LINES 1, 2 AND 3 RESPECTIVELY.
4. CABLES FROM OTHER GROUPS OF AN INSTALLATION TO THE KEY TRANSMITTER GROUP ARE DESIGNATED CX-2648/FGC.
5. CABLES FROM OTHER GROUPS TO THE KEY RECEIVER GROUPS ARE DESIGNATED CX-2649/FGC.

Figure 7—212. Interconnecting Diagram

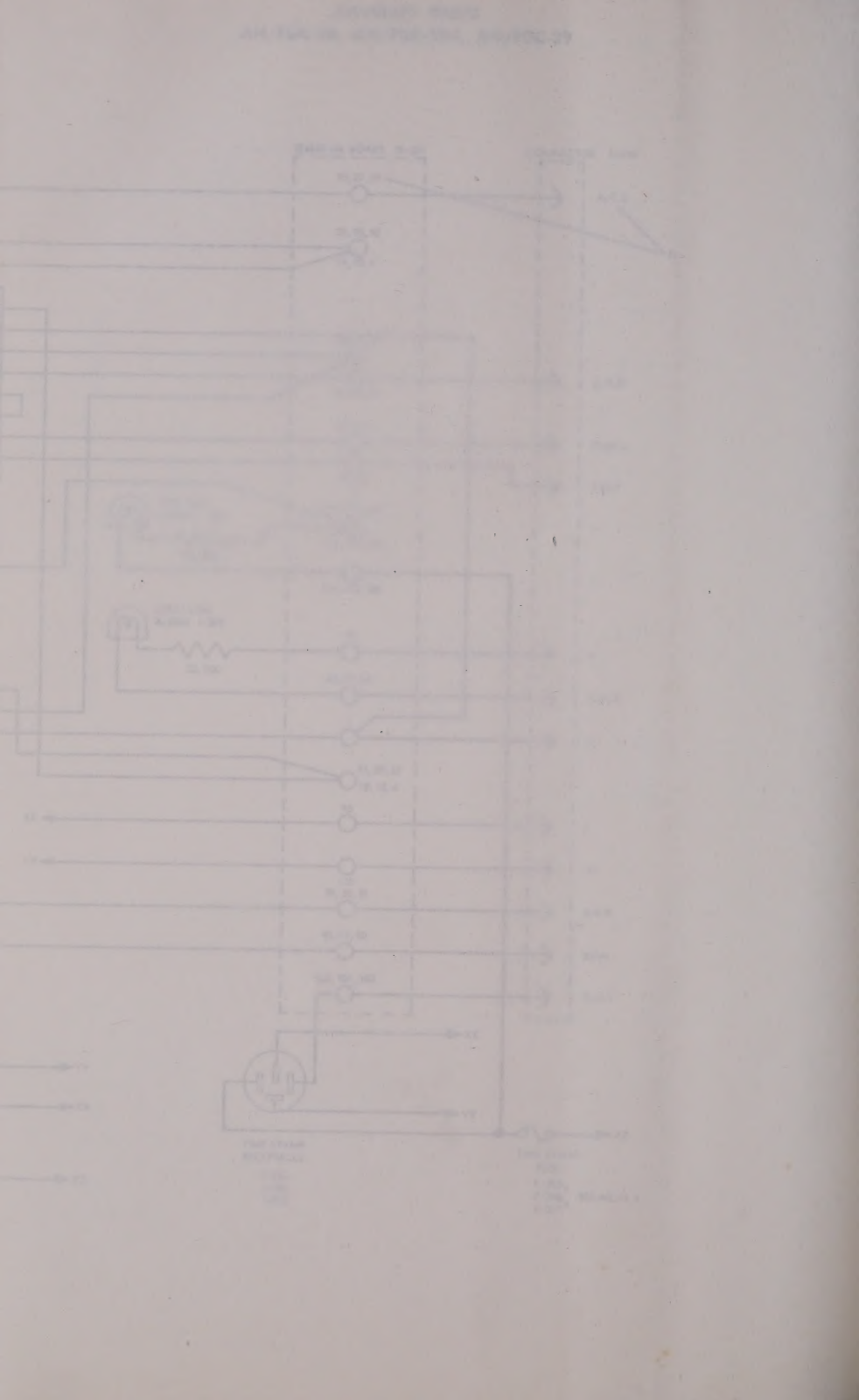

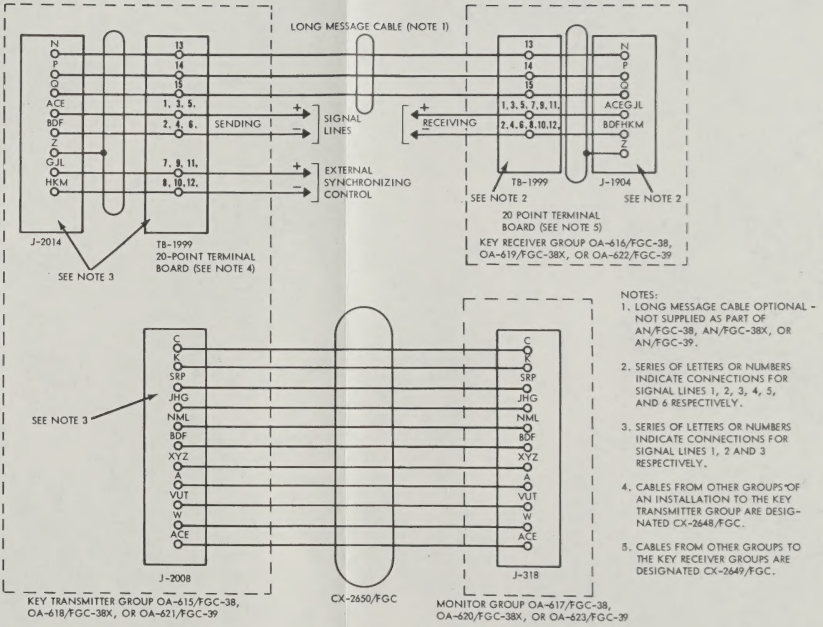

NOTES:

1. LONG MESSAGE CABLE OPTIONAL - NOT SUPPLIED AS PART OF AN/FGC-38, AN/FGC-38X, OR AN/FGC-39.
2. SERIES OF LETTERS OR NUMBERS INDICATE CONNECTIONS FOR SIGNAL LINES 1, 2, 3, 4, 5, AND 6 RESPECTIVELY.
3. SERIES OF LETTERS OR NUMBERS INDICATE CONNECTIONS FOR SIGNAL LINES 1, 2 AND 3 RESPECTIVELY.
4. CABLES FROM OTHER GROUPS OF AN INSTALLATION TO THE KEY TRANSMITTER GROUP ARE DESIGNATED CX-2648/FGC.
5. CABLES FROM OTHER GROUPS TO THE KEY RECEIVER GROUPS ARE DESIGNATED CX-2649/FGC.

Figure 7—212. Interconnecting Diagram

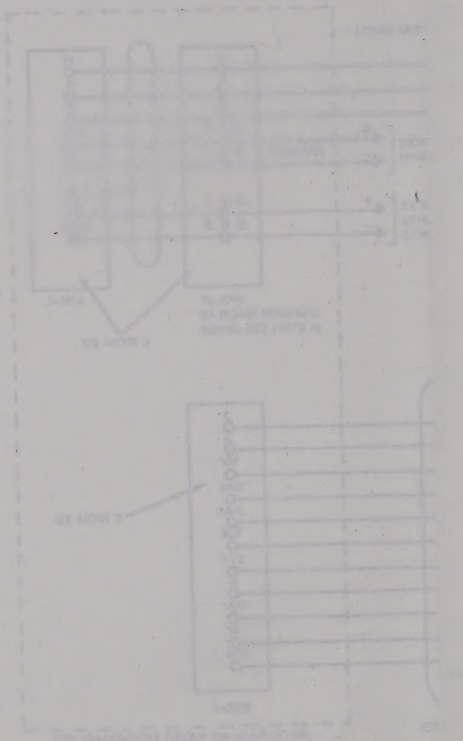

INSTRUCTION BOOK

for

TELETYPEWRITER SETS AN/FGC-38, AN/FGC-38X, and AN/FGC-39

SECTION 8

PARTS LISTS

INSTRUCTION BOOK

for

TELETYPEWRITER SETS AN/FGC-38, AN/FGC-38X, and AN/FGC-39

SECTION X

PARTS LISTS

LIST OF TABLES

Table	*Title*	*Page*
8-1	Weights and Dimensions of Spare Parts Boxes	8-2
8-2	Shipping Weights and Dimensions of Spare Parts Boxes (Not Applicable)	8-2
8-3	List of Major Units	8-3
8-4	Combined Parts and Spare Parts Lists	8-4
8-5	Cross Reference Parts List	8-244
8-6	List of Manufacturers	8-250

SECTION 8
PARTS LISTS

LIST OF TABLES

Subject	Page
Table 8-1. Weights and Dimensions of Spare Parts Boxes	8-2
Table 8-2. Shipping Weights and Dimensions of Spare Parts Boxes (Not Applicable)	8-2
Table 8-3. List of Major Units	8-3
Table 8-4. Combined Parts and Spare Parts Lists	8-4
Table 8-5. Cross Reference Parts List	8-244
Table 8-6. List of Manufacturers	8-250

TABLE 8-1. WEIGHTS AND DIMENSIONS OF SPARE PARTS BOXES

EQUIPMENT SPARES					
SPARE PARTS BOX	OVER-ALL DIMENSIONS IN INCHES			VOLUME CU. FT.	WEIGHT POUNDS
	HEIGHT	WIDTH	DEPTH		
1	31	17½	26	8.2	140

TABLE 8-2. SHIPPING WEIGHTS AND DIMENSIONS OF SPARE PARTS BOXES

NOT APPLICABLE

(Spare Parts Box Included in Unit Pack)

TABLE 8-3. LIST OF MAJOR UNITS

SYMBOL GROUP	QUANTITY	NAME OF MAJOR UNIT	NAVY TYPE DESIGNATION	STANDARD NAVY STOCK NO.
100-199	4	CONTROL PANEL	SB-357/FGC	
200-299	3	CONTROL PANEL	SB-358/FGC	
300-399	1	ELECTRICAL EQUIPMENT CABINET	CY-1522/FGC	F17-T-350016-515
400-499	3	REELING MACHINE	RL-173/FGC	F17-T-350016-511
500-599	2	POWER SUPPLY	PP-987/U	F16-P-68373-4399
600-699		GOVERNED MOTOR		
700-799		SYNCHRONOUS MOTOR		
800-1299 2100-2199	4	TELETYPEWRITER REPERFORATOR	TT-161/FGC-38 TT-162/FGC-38X TT-163/FGC-39	F17-T-350016-413
	3		TT-164/FGC-38 TT-165/FGC-38X TT-166/FGC-39	F17-T-350016-415
1300-1499	6	DISTRIBUTOR-TRANSMITTER	TT-167/FGC-38 TT-169/FGC-38	F17-T-350016-510 F17-T-350016-514
	3		TT-168/FGC-39 TT-170/FGC-39	
1500-1699	1	MOUNTING BASE	MT-1372/FGC-38 MT-1373/FGC-38X MT-1374/FGC-39	F17-T-350016-497
1700-1799	2	MOUNTING BASE	MT-1369/FGC-38 MT-1370/FGC-38X MT-1371/FGC-39	F17-T-350016-498
1800-1899	3	TIME STAMP	MX-1527/U	F17-T-350016-512
1900-1999	1	ELECTRICAL EQUIPMENT CABINET	CY-1523/FGC	F17-T-350016-499
2000-2099	1	ELECTRICAL EQUIPMENT CABINET	CY-1524/FGC	F17-T-350016-506

TABLE 8-4. COMBINED PARTS AND SPARE PARTS LIST

PARTS

SYMBOL DESIG.	NAME OF PART AND DESCRIPTION	FUNCTION	JAN OR NAVY TYPE DESIG.	SIGNAL CORPS STANDARD NAVY, AIR FORCE STOCK NO.	MANUFACTURERS CODE	MANUFACTURERS DESIG.	TELETYPE PART NO.	ALL SYMBOL DESIGNATIONS INVOLVED	TOTAL NO. PER EQUIP.	EQUIPMENT SPARE PARTS BOX	EQUIPMENT SPARE PARTS QUAN
A-201	PLATE, delay: steel, zinc pl; body curved w/cutout in curve near wd end; approx 1-5/8" lg x 1-1/8" wd x 5/16" h o/a; 0.036" thk material; mts by hole near narrow end	Delay plate for S-202		4T128541 N17-T-350016-648	CTT	128541	128541	A-201	3	0	0
A-301	CONTAINER, tape reel: steel, nickel pl; black wrinkle enamel; contains tape reel; cylindrical shape; approx 9-3/16" diam x 1-3/8" h o/a; two mtg holes 5/32" diam; two square cuts in wall	Container for tape roll		*1	CTT	110454	110454	A-301	1	0	0
A-302	PLATE, clamp: steel, nickel pl; approx 1" lg x 15/32" wd x 3/32" thk o/a; two untapped 5/32" diam mtg holes	Holds 0-301 to A-301		N17-T-350010-812	CTT	97342	97342	A-302	1	0	0
A-303	PLATE, tape reel: steel, nickel pl; 3-1/4" diam x 1-1/16" thk o/a; three untapped mtg holes; six symetrically placed cutouts	Holds tape roll		N17-T-350002-888	CTT	89086	89086	A-303	1	0	0
A-305	FILLER, tape reel wooden: hard wood black lacquer finish; approx 1-5/16" diam x 7/8" lg o/a; one untapped mtg hole 5/32" diam with 9/32" counterbore 3/16" d; edges rounded off	Core for tape roll		N17-T-350002-890	CTT	89088	89088	A-305	1	0	0
A-306	BRACKET, tape out: double "L" shape; steel, nickel pl; approx 2-5/8" lg x 1-1/32" diam x 2-11/32" h o/a; mts by two untapped holes 5/32" diam	Mounts E-301 and 0-303		*1	CTT	110656	110656	A-306	1	0	0
A-307	RETAINER ASSEMBLY, tape: c/o CTT parts #83426 retainer, #89440 retainer, #75091 knob, #89441 pin, riveted together; steel, nickel pl; approx 8-1/16" lg x 1-1/8" h x 5/8" wd o/a; mts by slotted pin	Holds tape roll		N17-T-350002-891	CTT	89089	89089	A-307	1	0	0
A-308	PLATE: steel, nickel pl; flat strip w/2 holes; approx 11/16" lg x 5/16" wd x 0.035" thk o/a; two mtg holes	Secures E-305 to H-304		N17-T-350006-878	CTT	41732	41732	A-308,A-606 A-610,A-1304 A-1906	33	0	0
A-320	BRACKET: angle iron shape w/fastener spring riveted on; approx 3-7/16" lg x 7/8" wd x 9/16" h o/a; two mtg slots	Fastener for upper door		*1	CTT	124484BR	124484BR	A-320,A-1921	5	0	0

A-401	BRACKET, motor: irregular shape; 0.125" steel, nickel pl; approx 2-5/16" lg x 2-3/16" wd x 7-5/16" h o/a; 10 rectangular mtg holes; one round hole for motor	Supports B-401	*1	CTT	126900	126900	A-401	3	0	0
A-402	PLATE, base: 0.125" steel, nickel pl; flat, rectangular; approx 18-3/8" lg x 3-1/16" wd x 0.125" thk o/a; 18 mtg holes	Base plate for reeling machine RL-173/FGC	*1	CTT	126899	126899	A-402	3	0	0
A-403	BLOCK, mounting: steel, nickel pl; rectangular block; 10-5/8" lg x 1/2" h x 3/8" wd o/a; mts by three #6-40 holes through h; three #6-40 holes through wd	Supports A-405	*1	CTT	126917	126917	A-403,A-404	6	0	0
A-404	Same as A-403	Supports A-406								
A-405	PLATE: 0.095" steel, nickel pl; modified flat, rectangular; approx 7-5/8" lg x 6" wd x 0.095" thk o/a; 20 mtg holes	Outer plate to support A-407, A-409, A-413, A-419 and tape reel	*1	CTT	126902	126902	A-405	3	0	0
A-406	PLATE: 0.095" steel, nickel pl; modified flat, rectangular; approx 7-5/8" lg x 6" wd x 0.095" thk o/a; 10 mtg holes	Inner plate to support A-410, A-411, and tape reel	*1	CTT	126901	126901	A-406	3	0	0
A-407	BRACKET, clutch bearing: irregular "S" shape; 0.095" steel; nickel pl; approx 4-3/8" lg x 2-1/8" wd x 1-11/16" h o/a; three mtg holes	Secures O-416	*1	CTT	126913	126913	A-407	3	0	0
A-408	GUARD, left: steel, nickel pl; irregular belt crank shape; approx 5-5/16" lg x 1-7/32" wd x 2-1/8" h o/a; one mtg hole each end	Guards O-405 and O-418	*1	CTT	123702	123702	A-408	3	0	0
A-409	PLATE, bearing, outer: phosphorous bronze, nickel pl; rectangular w/slot 5/8" wd x 1" lg; approx 1-7/8" lg x 1-3/8" wd x 1/8" thk o/a; two mtg holes	Bearing plate for O-416	4T102213 NI7-T-350016-216	CTT	102213	102213	A-409	3	0	0
A-410	PLATE, bearing, inner: phosphorous bronze, nickel pl; rectangular w/1/4" wd slot; approx 1-7/8" lg x 1-3/8" wd x 0.125" thk o/a; two ctb mtg holes	Bearing plate for O-416	4T102212 NI7-T-350016-228	CTT	102212	102212	A-410	3	0	0
A-411	BRACKET, tight tape: steel, nickel pl; rectangular flat pl; approx 6-9/16" lg x 1" wd x 0.095" thk o/a; six mtg holes	Supports A-412	*1	CTT	126989	126989	A-411	3	0	0

*1 Low Failure item - if required requisition from ESO referencing Navships 900,180A

TABLE 8-4. COMBINED PARTS AND SPARE PARTS LIST

PARTS										EQUIPMENT SPARE PARTS	
SYMBOL DESIG.	NAME OF PART AND DESCRIPTION	FUNCTION	JAN OR NAVY TYPE DESIG.	SIGNAL CORPS STANDARD NAVY, AIR FORCE STOCK NO.	MANUFACTURERS CODE	MANUFACTURERS DESIG.	TELETYPE PART NO.	ALL SYMBOL DESIGNATIONS INVOLVED	TOTAL NO. PER EQUIP.	BOX	QUAN
A-412	PLATE, guide: aluminum, etched background filled w/black lacquer; rectangular shape, rounded corners, approx 1-5/8" lg x 31/32" wd x 0.020" thk o/a; mts by four body holes; raised border, raised rim around mtg holes, raised irregularly curved guide line around mtg holes, all raised areas polished and finished w/clear lacquer	Direction indicating guide for tape		*1	CTT	129082	129082	A-412	3	0	0
A-413	GUIDE, stop lever: steel, nickel pl; "L" shape; approx 1-1/32" lg x 1-1/32" h x 21/32" wd o/a; two mtg holes; rectangular slot at one end	Guides 0-404		*1	CTT	126914	126914	A-413	3	0	0
A-414	BRACKET: "U" shape; 0.095" steel, nickel pl; approx 2" lg x 2-1/8" wd x 5-1/4" h o/a; 11 mtg holes	Supports A-415 and A-416		*1	CTT	126903	126903	A-414	3	0	0
A-415	BRACKET: modified flat rectangular; 0.125" steel, nickel pl; approx 4-23/32" lg x 2-3/8" wd x 0.125" thk o/a; four mtg holes	Supports 0-407		*1	CTT	126904	126904	A-415	3	0	0
A-416	BRACKET, switch: sw mtg bkt; "L" shape; 0.095" steel, nickel pl; approx 1-1/32" lg x 3/4" wd x 9/16" h o/a; three mtg holes	Supports S-401		*1	CTT	126919	126919	A-416	3	0	0
A-417	PLATE, bearing: 0.125" phosphorous bronze, nickel pl; rectangular shape w/rectangular slot ea end; approx 3" lg x 1-1/2" wd x 0.125" thk o/a; mts by shaft in ctr hole; ctb hole at ctr	Supports 0-416		4T98235 N17-T-350016-233	CTT	98235	98235	A-417	3	0	0
A-418	GUARD, pinion: steel, nickel pl; rectangular w/concave portion; approx 5-1/2" lg x 3" wd x 7/16" thk o/a; four mtg holes	Guards 0-418		*1	CTT	123701	123701	A-418	3	0	0
A-419	BLOCK: steel, nickel pl; rectangular shape; approx 7/8" lg x 3/4" wd x 3/8" thk o/a; three tapped and one untapped mtg holes	Mount for 0-402 and 0-403		4T126915 N17-T-350016-447	CTT	126915	126915	A-419	3	0	0

A-600	GUARD: steel, nickel pl; "T" shaped, curved and formed; approx 4-1/16" lg x 3-9/16" wd x 1" h o/a; four mtg holes in top of "T"; one body hole and elongated hole in stem of "T"	Protects reperforator mechanism	N17-T-350007-715	CTT	72739	72739	A-600,A-703	20	0	0
A-601	FRAME: motor field; steel black painted finish; round w/2 flat base extensions on bottom, four equidistant cut-outs adjacent to hub in rear, dished out from front; approx 5" lg x 4-5/8" wd x 5" h o/a; mts by two elongated holes in ea base extension; ball oiler and 13/32" shaft hole in hub, two brush holder holes in line in frame, two tapped holes inside frame	Supports field coils armature, brushes, and forms base of motor	N17-T-350007-794	CTT	73236	73236	A-601	10	0	0
A-602	STOP, lever: steel, nickel pl; rectangular ctr cutout, one side; approx 3/4" lg x 3/8" wd x 1/32" thk o/a; mts by two slots one side	Limits the travel of O-600	N17-T-350002-512	CTT	84047	84047	A-602	10	0	0
A-603	STRIP, wearing: governor adj lever; nickel silver; "L" shape, curved cutout and formed corners one end, other end slotted; approx 19/32" lg x 3/4" wd x 53/64" h o/a; mts by two body holes in slotted end	Bears against O-618 to increase motor speed	N17-T-350006-296	CTT	8222	8222	A-603	10	0	0
A-604	SHIELD, end: for motor; steel black painted finish; round, four equidistant cutouts adjacent to hub, angular cut-out in hub two notches in rim dished out from back; approx 4-5/8" OD x 25/64" ID x 1-5/8" lg o/a; mts by two body holes near circum; ball oiler and four ctb holes in hub	Supports motor bearing and armature	N17-T-350007-795	CTT	73237	73237	A-604	10	0	0
A-605	BRACKET: governor adj; steel, nickel pl; approx 3-11/16" lg x 3-21/32" wd x 23/32" h o/a; two mtg holes; formed shoe in center	Bears against O-618 to decrease motor speed	N17-T-350002-234	CTT	80338	80338	A-605	10	0	0
A-606	Same as A-308	Secures parts E-609 through E-613 to A-609								
A-607	PLATE, clamp: steel, nickel pl; approx 1-1/8" lg x 3/4" wd x 3/32" thk o/a; mts by two body holes	Secures A-608 to A-616	N17-T-350002-231	CTT	80335	80335	A-607	10	0	0

*1 Low Failure item - if required requisition from ESO referencing NavShips 900,180A

TABLE 8-4. COMBINED PARTS AND SPARE PARTS LIST

PARTS									EQUIPMENT SPARE PARTS	
SYMBOL DESIG.	NAME OF PART AND DESCRIPTION	FUNCTION	JAN OR NAVY TYPE DESIG.	SIGNAL CORPS STANDARD NAVY, AIR FORCE STOCK NO.	MANUFACTURERS CODE	MANUFACTURERS DESIG.	TELETYPE PART NO.	ALL SYMBOL DESIGNATIONS INVOLVED	TOTAL NO. PER EQUIP.	BOX	QUAN
A-608	BRACKET: brush spring; irregular formed shape; steel, nickel pl; approx 4" lg x 2-1/8" wd x 1-13/16" h o/a; mts by body hole and elongated slot in ctr p/o body; three #6-40 thd tapped holes, six body holes, one formed arm	Supports A-605 and A-609 with attached parts		N17-T-350002-233	CTT	80337	80337	A-608	10	0	0
A-609	PLATE, mounting: brush spring; steel, nickel pl; approx 2-1/4" lg x 1-3/4" wd x 5/32" thk o/a; mts by two body holes, two locating pins and tapped hole in ear; four tapped holes for spring mtg	Supports parts E-609 through E-618, A-606, H-633, A-610 and H-636		N17-T-350002-235	CTT	80340	80340	A-609	10	0	0
A-610	Same as A-308	Secures parts E-614 through E-618 to A-609									
A-611	COVER: governor flywheel shell; three CTT #78432 brass inserts on inner face; black phenolic; min 200 v DC per mil applied for one sec; approx 3-1/4" OD x 33/64" ID x 7/8" wd o/a; mts by three 9/64" ctb holes equidistant on hub hole, two ctb oval holes, two 9/64" holes, two 1/8" ctb holes on edge of governor wheel slot	Supports governor parts		N17-T-350002-112	CTT	78439	78439	A-611	10	0	0
A-612	SHIELD, resistor: steel, nickel pl; both ends formed; approx 5-7/16" lg x 1" wd x 7/16" h o/a; mts by two body holes in ea formed end	Shields R-600 and reinforces A-613		N17-T-350011-863	CTT	107027	107027	A-612	7	0	0
A-613	BRACKET: resistor; steel nickel pl; approx 7-9/16" lg x 4-15/16" wd x 1-11/16" h o/a; two mtg holes in formed ears, nine tapped holes, three body holes, irregularly formed	Supports parts of resistor assembly		N17-T-350004-449	CTT	106048	106048	A-613	7	0	0
A-614	COVER: steel; nickel pl; enclosed on four sides, bent clamping arm one side; two mtg wings and two formed ears on bottom; approx 1-11/16" lg x 13/16" wd x 1-33/64" h o/a; mts by three body holes in mtg wings; body hole in one bottom ear, two body holes in upper ear	Holds C-602 and C-603		N17-T-350011-346	CTT	99354	99354	A-614	10	0	0

A-615	BRACKET: hook shape; steel, nickel pl; 4-5/8" lg x 1/2" wd x 1-13/16" h o/a; mts by tapped hole and two elongated holes; csk hole one end, other end notched	Supports parts of filter assembly		N17-T-350003-868	CTT	99356	99356	A-615	10	0	0
A-616	BRACKET: step shaped; steel, nickel pl; approx 1-1/16" lg x 7/8" wd x 1/2" h o/a; mts two body holes one end, two #6-40 tapped holes other end	Supports filter and resistor assemblies		N17-T-350003-867	CTT	99355	99355	A-616	10	0	0
A-617	BRACKET: resistor; "L" shape; steel, nickel pl; approx 3-5/8" lg x 1/2" wd x 9/16" h o/a; mts by #6-40 hole one end; 9/16" hole formed end	Supports parts of the resistor assembly		N17-T-350004-595	CTT	110834	110834	A-617	3	0	0
A-618	BRACKET: steel, nickel pl; irregular shape; approx 5-25/32" lg x 4-9/16" wd x 25/32" h o/a; mts by two 15/64" body holes, five 3/16" body holes; one end formed other end tapered w/cutout near mtg holes	Supports parts of the resistor assembly		*3	CTT	129523	129523	A-618	3	0	0
A-619	BRACKET: resistor bracket support; rectangular shape; one end formed 30°; steel, nickel pl; approx 1-7/32" lg x 3/8" wd x 7/32" thk o/a; mts by elongated slot in body	Supports A-613		N17-T-350011-862	CTT	107026	107026	A-619	7	0	0
A-701	SHIELD, end: for motor; steel, black painted finish; round four equidistant triangular cutouts adjacent to hub, cut-out on ea side of one mtg hole, angular cutout on hub, three notches in rim, dished out from rear; approx 4-1/2" OD x 13/32" ID x 49/64" lg o/a; mts by two body holes near circum; ball oiler in hub, two body holes near hub	Provides cover for 0-709 and support for motor bearing and armature		N17-T-350002-395	CTT	82850	82850	A-701	10	0	0
A-703	Same as A-600	Protects reperforator mechanism									
A-704	SHIELD, end: for motor; steel, black painted finish; round, four equidistant cutouts adjacent to hub, angular cutout in hub, two notches in rim dished out from back; approx 4-1/2" OD x 13/32" ID x 1-27/32" lg o/a; mts by two body holes near circum; ball oiler in hub	Provides cover for 0-709 and support for motor bearing and armature		N17-T-350008-681	CTT	80558	80558	A-704	10	0	0
A-705	BRACKET: "Z" shape; steel, nickel pl; approx 2-1/4" lg x 1-5/32" h x 3/4" wd o/a; mts by two 5/32" holes; one 15/32" hole	Supports S-701		4T126981 N17-T-350016-458	CTT	126981	126981	A-705	7	0	0

*3 Shop Manufacture

TABLE 8-4. COMBINED PARTS AND SPARE PARTS LIST

PARTS									EQUIPMENT SPARE PARTS	
SYMBOL DESIG.	NAME OF PART AND DESCRIPTION	FUNCTION	JAN OR NAVY TYPE DESIG.	SIGNAL CORPS STANDARD NAVY, AIR FORCE STOCK NO.	MANUFACTURERS CODE	MANUFACTURERS DESIG.	TELETYPE PART NO.	ALL SYMBOL DESIGNATIONS INVOLVED	TOTAL NO. PER EQUIP.	BOX	QUAN
A-707	BRACKET: "L" shape; steel, nickel pl; approx 2-5/32" lg x 1-11/32" h x 1-3/4" wd o/a; mts by two slots 1/8" wd; one body hole opposite mtg side	Supports S-702		4T128863 N17-T-350016-477	CTT	128863	128863	A-707	4	0	0
A-708	BRACKET: irregular shape; steel, nickel pl; approx 5-3/4" lg x 5-1/16" wd x 2-1/4" h o/a; mts by two 9/32" holes; one slot, one 11/16" hole, nine #6-40 thd holes	Supports filter assembly TB-700, J-700 and A-705		*1	CTT	126984	126984	A-708	7	0	0
A-709	BRACKETS: "L" shape; steel, nickel pl; approx 5-1/4" lg x 1-29/32" h x 7/8" wd o/a; mts by four #6-40 thd holes; four 5/32" holes and one 1/4" hole	Supports C-700, R-700, R-701 and TB-700		N17-T-350016-438	CTT	126299	126299	A-709	4	0	0
A-800	BRACKET: "L" shaped w/elongated hole; steel, nickel pl; approx 1-7/8" lg x 1/2" wd x 1" h o/a; mts by 2 tapped holes	Supports I-800		N17-T-350001-545	CTT	8465	8465	A-800	7	0	0
A-801	POST: steel, nickel pl; approx 1-5/32" lg x 1/4" sq o/a; one end threaded 3/16" lg w/#6-40 thd, opposite end tapped radial hole w/#6-40 thd; 1/16" d cut-out in body	Supports 0-800		N17-T-350006-720	CTT	8461	8461	A-801,A-804	14	0	0
A-802	POST: steel, nickel pl; approx 1-3/32" lg x 1/4" sq o/a; one end threaded 3/16" lg w/#6-40 thd opposite end slotted; tapped hole in line w/drilled hole through slotted end	Supports 0-808		N17-T-350001-460	CTT	6920	6920	A-802	7	0	0
A-803	PLATE, guide: steel, nickel pl; sq shape, rectangular cut-out one edge; approx 3/4" lg x 21/32" wd x 0.065" thk o/a; mts by two body holes	Secures 0-809 to A-805 and guides 0-1037		N17-T-350010-609	CTT	95466	95466	A-803	7	0	0
A-804	Same as A-801	Supports 0-803 and 0-804									

A-805	PLATE, base: c/o plate and four ea of CTT #119629 links, #124144 screws, #7002 flat washers and #2191 lock washers; steel, nickel pl; rectangular shape, cutout in one edge, four mtg hubs welded to corners, three posts riveted to body; approx 11-1/4" lg x 9" wd x 1/2" thk o/a; mts by ID of four corner hubs; drilled and tapped for installation of sub-assemblies	Supports reperforator mechanism	*1	CTT	129380	129380	A-805	7	0	0
A-806	BRACKET: type bar spring anchor; curved flat plate, 26 body holes along outer edge; steel, nickel pl; approx 5-3/8" lg x 1-9/16" h x 0.095" thk o/a; mts by two #6-40 thd holes	Anchors 26 type bar springs	N17-T-350015-674	CTT	6825	6825	A-806	7	0	0
A-807	BRACKET: function bar spring anchor; irregular shape, short wd extension and four body holes one side; steel, nickel pl; approx 1-1/4" lg x 3/4" wd x 0.095" thk o/a; mts by two #6-40 thd holes	Anchors 0-816 and 0-807	N17-T-350015-675	CTT	6826	6826	A-807,A-808	14	0	0
A-808	Same as A-807	Anchors 0-911								
A-809	BRACKET: type bar backstop; "U" shape w/formed mtg ear one side; steel, nickel pl; 1-23/32" lg x 5/8" wd x 5/16" thk o/a; one tapped mtg hole; one body hole near mtg end	Supports one end of 0-914 and 0-916	N17-T-350004-248	CTT	103341	103341	A-809,A-810	14	0	0
A-810	Same as A-809	Supports one end of 0-914 and 0-916								
A-811	BRACKET: bail and code bar support; aluminum; approx 8" lg x 5-7/16" wd x 2-1/2" h o/a; mts by four #10-32 thd holes in four flats one side; irregularly cut out, sq ctr cutout, tapped and drilled to accom related parts	Support for reperforator mechanism	N17-T-350001-474	CTT	6969	6969	A-811	7	0	0
A-812	BRACKET: platen shift rear bearing; "L" shape, body ear w/csk hole one side, body hole at upper end; steel, nickel pl; approx 1-9/16" h x 1" wd x 9/16" lg o/a; 1/8" thk material; mts by two body holes in lower end	Supports one end of and guides 0-1038	N17-T-350008-370	CTT	75687	75687	A-812	7	0	0
A-813	BRACKET: roller guide support, LH; "L" shape; steel, nickel pl; approx 1-1/16" lg x 1" wd x 15/16" thk o/a; mts by two elongated holes; two tapped holes	Supports 0-938	N17-T-350004-141 *1 Low Failure item - if required requisition from ESO referencing NavShips 900,180A	CTT	102232	102232	A-813	7	0	0

TABLE 8-4. COMBINED PARTS AND SPARE PARTS LIST

PARTS

SYMBOL DESIG.	NAME OF PART AND DESCRIPTION	FUNCTION	JAN OR NAVY TYPE DESIG.	SIGNAL CORPS STANDARD NAVY, AIR FORCE STOCK NO.	MANUFACTURERS CODE	MANUFACTURERS DESIG.	TELETYPE PART NO.	ALL SYMBOL DESIGNATIONS INVOLVED	TOTAL NO. PER EQUIP.	EQUIPMENT SPARE PARTS BOX	EQUIPMENT SPARE PARTS QUAN
A-814	POST: steel, nickel pl; approx 13/16" lg x 1/4" sq o/a; mts by axial tapped hole in one end; radial tapped hole	Supports one end of 0-1080		N17-T-350010-618	CTT	95483	95483	A-814	7	0	0
A-815	BRACKET: roller guide support, RH; "L" shape; steel, nickel pl; approx 1-1/16" lg x 1" wd x 15/16" thk o/a; mts by two elongated holes; two tapped holes	Supports 0-941		N17-T-350004-140	CTT	102231	102231	A-815	7	0	0
A-816	BRACKET: ribbon spool; "U" shaped; steel, nickel pl; approx 3-5/8" lg x 5/8" wd x 1-13/16" h o/a; two elongated holes, two body holes in ea arm	Support for left ribbon unit assembly		N17-T-350001-493	CTT	7033	7033	A-816,A-819	14	0	0
A-817	BRACKET: spring support; "U" shape; steel, nickel pl; 1-1/8" lg x 21/32" wd x 1/4" thk o/a; mts by two body holes; two csk holes, one notch	Anchor for 0-817 and 0-818		N17-T-350011-555	CTT	102815	102815	A-817	7	0	0
A-818	BRACKET: spring anchor; "U" shaped; steel, nickel pl; approx 1-3/16" lg x 1/4" wd x 3/4" h o/a; mtg hole in short end; two csk holes other end	Anchors 0-912		N17-T-350007-491	CTT	70871	70871	A-818	7	0	0
A-819	Same as A-816	Support for right ribbon unit assembly									
A-820	BRACKET: main shaft; irregular shape; zinc alloy; approx 5-11/32" lg x 3-3/8" h x 2-7/8" wd o/a; mts by two #10-32 tapped holes one end; two CTT #6967 bearing retaining brackets in line near ea end mtd by CTT #72508 screws, #2191 lock washers and #7002 flat washers; six body holes, eight tapped holes	Support for main shaft assembly		N17-T-350006-245	CTT	7610	7610	A-820	7	0	0
A-821	FRAME: punch block; sintered iron; approx 13/16" lg x 1-3/16" wd x 3/4" thk o/a; eight tapped mtg holes	Support for punch block assembly		N17-T-350003-452	CTT	95458	95458	A-821	7	0	0
A-822	PLATE, guide: steel; approx 1-3/16" lg x 3/4" wd x 1/16" thk o/a; mts by two holes; TELETYPE imprinted one side; six pin holes, cutout one end, one small body hole	Guide for 0-1063 and 0-1064		N17-T-350001-274	CTT	125633	125633	A-822	7	0	0

A-823	BRACKET: irregular shape casting; iron nickel pl; approx 5-15/16" lg x 5-7/32" wd x 4-1/16" h o/a; mts by four #10-32 thd tapped holes; insulating plate attached to body by two drive screws, sleeve bearing welded to one corner, spring post riveted to body, drilled and tapped to accom sub-assemblies	Support for reperforator mechanism	N17-T-350003-516	CTT	96844	96844	A-823	7	0	0
A-824	BRACKET: "U" shape; steel, nickel pl; 11/16" lg x 11/32" wd x 7/32" h o/a; mts by two holes in base; five body holes	Anchors O-1090 and secures A-825 to A-823	N17-T-350003-444 1730-04047508 2	CTT	95429	95429	A-824	7	0	0
A-825	BRACKET: "L" shape; steel, nickel pl; 7/8" lg x 3/4" wd x 15/32" thk o/a; mts by two slots	Limits the travel of the punch fingers	N17-T-350003-513	CTT	96841	96841	A-825	7	0	0
A-826	BRACKET: "I" shape; steel, nickel pl; approx 3/4" lg x 9/32" wd x 3/8" h o/a; mts by two holes; rectangular cutout in ctr of one side	Holds punch fingers in position	N17-T-350010-598 1730-04303569	CTT	95445	95445	A-826	7	0	0
A-827	PLATE, adjusting: steel, nickel pl; "I" formed; approx 3/4" lg x 7/8" wd x 7/16" h o/a; mts by 1/4"-32 tapped hole one end; one body and two tapped holes opposite mtg end	Supports H-1048 and H-1050	N17-T-350003-510	CTT	96838	96838	A-827	7	0	0
A-828	BRACKET: irregular shape; steel, nickel pl; 2-5/8" lg x 1-5/8" wd x 3/4" thk o/a; mts by two tapped holes; five slots in line at ea end, two body holes, one slot	Supports code bar bell cranks and vertical links	N17-T-350003-708	CTT	98842	98842	A-828	7	0	0
A-829	PLATE, end: nickel silver; approx 1.53/64" lg x 1-19/64" wd x 3/32" thk o/a; mts by three body holes; body hole in bent end	Covers O-1120 and anchors O-1118 or O-1119	N17-T-350004-936	CTT	90507	90507	A-829	7	0	0
A-830	PLATE, mounting: steel, nickel pl; irregular shape, two welded posts, two riveted posts and two riveted pins, 16 tapped holes and 14 body holes, one irregular shape ctr cutout; approx 6-3/8" lg x 4-1/4" h x 1-25/32" wd o/a; mts by tapped hole in end of ea welded post; tapped hole through one welded post	Supports selector mechanism	N17-T-350004-989	CTT	91218	91218	A-830	7	0	0
A-831	BRACKET: "Y" shape; zinc alloy; 1-13/16" lg x 1-7/16" wd x 1/2" thk o/a; mts by two tapped holes in line; three body holes	Provides adjustment for operation and supports of O-1152	N17-T-350004-938	CTT	90512	90512	A-831	7	0	0

TABLE 8-4. COMBINED PARTS AND SPARE PARTS LIST

PARTS										EQUIPMENT SPARE PARTS	
SYMBOL DESIG.	NAME OF PART AND DESCRIPTION	FUNCTION	JAN OR NAVY TYPE DESIG.	SIGNAL CORPS STANDARD NAVY, AIR FORCE STOCK NO.	MANUFACTURERS CODE	MANUFACTURERS DESIG.	TELETYPE PART NO.	ALL SYMBOL DESIGNATIONS INVOLVED	TOTAL NO. PER EQUIP.	BOX	QUAN
A-832	PLATE, clamp: steel, nickel pl; wd end oval shape, elongated slot in narrow end; approx 9/32" lg x 7/32" wd x 0.050" thk o/a; mts by #2-56 thd tapped hole	Secures 0-1151 to 0-1152		N17-T-350010-804	CTT	97317	97317	A-832	7	1	6
A-833	BRACKET: irregular shape; zinc alloy; 2-1/4" lg x 1-3/8" wd x 1-3/16" thk o/a; mts by five tapped holes; two body holes w/hex ctb	Supports 0-1156 and coils also provides means of adjusting armature		N17-T-350002-970	CTT	90043	90043	A-833	7	0	0
A-834	BRACKET: rectangular shape base w/cutout on mtg side, two arms projecting up, formed wing on one arm; bronze; approx 4-27/32" lg x 3-25/64" wd x 4-5/16" h o/a; mts by four #10-32 thd tapped holes in base near cutout edge; drilled and tapped to accom sub-assemblies, bushing press fitted in ea arm in line	Support for tape feed out mechanism		4T129252 N17-T-350016-376	CTT	129252	129252	A-834	4	0	0
A-835	PLATE, clamp: steel, nickel pl; pl; "L" shape; approx 1-1/2" lg x 13/32" wd x 1/2" h o/a; one mtg slot near ctr; csk hole in formed end, tapped hole other end	Supports H-1196 and H-1197, anchors 0-1171 and provides means for adjusting E-801		4T129247 N17-T-350016-382	CTT	129247	129247	A-835	4	0	0
A-836	ANCHOR, spring: steel, nickel pl; both ends rounded, tapered to one end; approx 15/16" lg x 5/16" wd x 0.042" thk o/a; mts by body hole in wd end; csk spring hole in narrow end	Anchors 0-1175		N17-T-350017-0516 1730-043951645	CTT	129287	129287	A-836	4	1	3
A-837	BRACKET: switch support; "L" shaped formed at ctr; steel, nickel pl; approx 2-1/4" lg x 5/8" h x 1-5/8" thk o/a; mts by two 5/32" wd elongated holes; two #2-56 thd holes	Supports S-800		4T129244 N17-T-350016-459	CTT	129244	129244	A-837	4	0	0
A-838	ANCHOR, spring: steel, nickel pl; "L" shape, formed 98°; approx 19/32" lg x 1/4" wd x 9/32" h o/a; mts by body hole in short end; spring anchor hole in lg end	Anchors 0-1177		*1	CTT	129466	129466	A-838	4	0	0
A-839	BRACKET: switch support; "L" shape; steel, nickel pl; approx 1-15/32" lg x 2-1/4" h x 9/16" wd o/a; mts by two elongated holes; two #2-56 thd holes	Supports S-801		*1	CTT	129243	129243	A-839	4	0	0

A-840	PLATE: iron, nickel pl; rectangular shape w/rounded corners; approx 1-3/8" lg x 1-1/4" wd x 1/8" thk o/a; four mtg holes	Supports L-802, L-803 and A-838	4T129240 N17-T-350016-474	CTT	129240	129240	A-840	4	0	0
A-841	PLATE, mounting: motor; steel, nickel pl; rectangular w/3 corners cut off, other corner curved cutout; approx 8-1/4" lg x 5-1/16" wd x 1/8" thk o/a; mts by four 1/4"-32 tapped holes; six body, two csk and five #6-40 tapped holes, slot near one corner	Supports motor B-801	N17-T-350004-410	CTT	105739	105739	A-841	7	0	0
A-842	PLATE, mounting: motor; steel, nickel pl; rectangular w/3 corners cut off, other corner curved cutout; approx 8-1/4" lg x 5-1/16" wd x 1/8" thk o/a; mts by four #10-32 tapped holes; four body holes, five #6-40 tapped holes, slot near one corner	Supports motor B-800	N17-T-350001-440	CTT	6732	6732	A-842	7	0	0
A-843	GUARD, gear: steel, nickel pl; irregular shape; approx 3-3/8" lg x 3-3/8" h x 2-3/16" wd o/a; mts by two body holes	Protects reperforator main shaft gear	N17-T-350010-789	CTT	97294	97294	A-843	3	0	0
A-844	BRACKET: tape feed roll support; irregular shape; steel, nickel pl; 2-9/32" lg x 1-3/4" wd x 3/32" thk o/a; mts by two #6-40 holes; three plain holes, one #10-32 and one 1/4"-32 tapped hole	Supports and provides pivot for one end of 0-1069	N17-T-350003-512	CTT	96840	96840	A-844	7	0	0
A-1300	BLOCK, guide: natural color bakelite; rectangular, five slots 5/16" dp one side; approx 1-7/8" lg x 1/2" wd x 17/32" h o/a; mts by 5/32" ctb hole near ea end	Supports E-1300, E-1301 and E-1302	N17-T-350016-740	CTT	129315	129315	A-1300	9	0	0
A-1301	PLATE, base: has two riveted spring posts; steel, nickel pl; rectangular shape w/large cutout one end; approx 5-3/4" lg x 4-9/16" wd x 1/4" thk o/a; mts by two csk corner holes; two elongated holes, two slots, two #6-40 and two #4-40 tapped holes, 12 body holes	Supports distributor-transmitter mechanism	*1	CTT	129299	129299	A-1301	9	0	0
A-1302	POST: steel, chromate dip; approx 3-11/32" lg x 5/16" across flats o/a; mts by tapped hole in ea end; two body holes	Supports A-1303 and A-1318	N17-T-350012-240	CTT	110653	110653	A-1302	18	0	0
			*1 Low Failure item - if required requisition from ESO referencing NavShips 900,180A							

TABLE 8-4. COMBINED PARTS AND SPARE PARTS LIST

PARTS										EQUIPMENT SPARE PARTS	
SYMBOL DESIG.	NAME OF PART AND DESCRIPTION	FUNCTION	JAN OR NAVY TYPE DESIG.	SIGNAL CORPS STANDARD NAVY, AIR FORCE STOCK NO.	MANUFACTURERS CODE	MANUFACTURERS DESIG.	TELETYPE PART NO.	ALL SYMBOL DESIGNATIONS INVOLVED	TOTAL NO. PER EQUIP.	BOX	QUAN
A-1303	PLATE: steel, nickel pl; approx 1-11/16" x 21/32" wd x 3/32" thk o/a; two #4-40 thd and two #6-40 thd mtg holes	Provides means of holding door on message transmitter bases		4T129298 N17-T-350016-385	CTT	129298	129298	A-1303	3	0	0
A-1304	Same as A-308	Secures contact assembly to A-1305									
A-1305	BRACKET: release bar support; "L" shape; steel, nickel pl; approx 1" lg x 1-13/32" h x 3/8" wd o/a; mounted by two holes 1/8" diam	Supports contact assembly		N17-T-350003-541	CTT	97548	97548	A-1305	9	0	0
A-1306	YOKE, magnet: iron, nickel pl; one side straight, mtg ear near ea end on other side; approx 1-9/16" lg x 3/4" wd x 1/8" thk o/a; mts by body hole in ea ear	Supports L-1300 and L-1301 by A-1307		N17-T-350013-453	CTT	97542	97542	A-1306	9	0	0
A-1307	BRACKET: "L" shape; steel, nickel pl; approx 1-9/16" lg x 27/32" h x 1/2" wd o/a; mts by two slots; two 5/32" holes	Supports A-1306, L-1300 and L-1301		*1	CTT	129301	129301	A-1307	9	0	0
A-1309	BRACKET: irregular "U" shape; steel, nickel pl; approx 3-3/16" lg x 1-11/16" wd x 1-1/2" thk o/a; mts by four tapped holes; three tapped holes, two body holes, one csk body hole, spring post	Supports coils and clutch trip mechanism		N17-T-350016-736	CTT	129300	129300	A-1309	9	0	0
A-1310	BRACKET: contact support; irregular shape; steel, nickel pl; 2-3/8" lg x 2-1/8" wd x 19/32" thk o/a; four tapped mtg holes in body; one tapped hole in arm, one reamed hole in ea arm, two tapped holes in formed side	Supports transmitter contact assembly and contact levers		N17-T-350010-869	CTT	97530	97530	A-1310	9	0	0
A-1311	PLATE, cover: steel, nickel pl; approx 2-3/8" lg x 17/32" wd x 0.050" thk; mts by four csk holes	Secures contact assembly to A-1310		N17-T-350004-686	CTT	112497	112497	A-1311	9	0	0
A-1312	PLATE, guide: brass, nickel pl; approx 4-15/32" lg x 1-1/32" wd x 9/16" h o/a; two ctb mtg holes; 10 teeth on edge, two tapped holes in ea end tooth, three tapped holes in body, slot across body	Supports selector levers, and transmitter mechanism		N17-T-350016-739	CTT	129314	129314	A-1312	9	0	0

A-1313	STOP: up stop for punch block; steel, nickel pl; flat w/corner cut off other end "U" slot; approx 1-11/16" lg x 11/32" wd x 3/64" thk; mts by 9/64" body hole	Provides means for adjusting travel of O-1347	N17-T-350016-667	CTT	129463	129463	A-1313	9	0	0
A-1314	BRACKET: selector lever spring bracket; straight shape; steel, nickel pl; approx 4-19/32" lg x 9/16" wd x 1/16" thk o/a; mtd by two 5/32" diam holes	Supports A-1313, A-1315 and provides anchor for various springs	N17-T-350003-540	CTT	97546	97546	A-1314	9	0	0
A-1315	BRACKET: filter mounting; steel, nickel pl; "L" shape; approx 1-3/8" wd x 1-9/32" lg x 1-5/16" h o/a; mts by three 1/8" body holes; rectangular cutout one corner, cut off other corner, one end formed 90° 5/8" wd x 1-5/16" lg, extruded point 1/32" h on base	Supports filter assembly	*3	CTT	114317	114317	A-1315	9	0	0
A-1316	BRACKET: tape retaining lid bearing bracket; "U" shape; steel, nickel pl; approx 1-5/16" lg x 17/32" h, 13/32" wd o/a; mts by two holes 9/64" diam located 3/8" from ends	Supports O-1380	N17-T-350004-586	CTT	110781	110781	A-1316	9	0	0
A-1317	BRACKET: tape retaining lid bracket support; "L" shape; steel, nickel pl; approx 1" lg x 27/32" h x 17/32" wd o/a; mtd by two holes tapped #4-40 thd, located 7/32" from ends	Supports A-1316 and O-1380	N17-T-350012-267	CTT	110778	110778	A-1317	9	0	0
A-1318	PLATE, cover: top plate of distributor-transmitter; steel, nickel pl; approx 5-1/16" lg x 2-55/64" wd x 3/32" thk o/a; mts by two holes 5/32" diam, one hole 9/64" diam, and one slot 9/64" wd and 3/16" lg	Supports distributor-transmitter mechanism and forms top cover	N17-T-350004-588	CTT	110790	110790	A-1318	9	0	0
A-1319	BAR, locking: steel, nickel pl; approx 3-13/16" lg x 5/16" wd x 5/16" h o/a; mtd by two holes 7/64" diam on centers 5/32" from end and 3/8" apart	Provides means of latching O-1307 in position	N17-T-350004-195	CTT	102937	102937	A-1319	9	0	0
A-1320	GUIDE: to guide sending pins; steel, nickel pl; approx 1-3/16" lg x 1/2" wd x 5/16" h o/a; mtd by two slots 1/8" wd	Guides pins on selector levers and tape out lever	N17-T-350011-316	CTT	99283	99283	A-1320	9	0	0

*1 Low Failure item - if required requisition from ESO referencing NavShips 900,180A

*3 Shop Manufacture

TABLE 8-4. COMBINED PARTS AND SPARE PARTS LIST

PARTS									EQUIPMENT SPARE PARTS	
SYMBOL DESIG.	NAME OF PART AND DESCRIPTION	FUNCTION	JAN OR NAVY TYPE DESIG.	SIGNAL CORPS STANDARD NAVY, AIR FORCE STOCK NO.	MANUFACTURERS CODE	MANUFACTURERS DESIG.	TELETYPE PART NO.	ALL SYMBOL DESIGNATIONS INVOLVED	TOTAL NO. PER EQUIP.	BOX	QUAN
A-1321	FRAME: left side frame; steel, nickel pl; rectangular shape, cut out one corner, bushing press fitted in front; approx 3-11/32" h x 1-1/2" wd x 3/8" thk o/a; mts by five #6-40 thd tapped holes in edges; one tapped hole and four body holes	Supports one end of 0-1326, A-1312, A-1318 and forms cover for side of distributor-transmitter		N17-T-350010-849	CTT	97503	97503	A-1321	9	0	0
A-1322	BRACKET: feed roll bearing support; "L" shape; steel, nickel pl; approx 3/4" lg x 5/8" wd x 35/64" h o/a; mtd by two holes 1/8" diam located 1/8" from ends	Supports one end of 0-1387		N17-T-350003-546	CTT	97554	97554	A-1322	9	0	0
A-1323	PLATE: steel, nickel pl; approx 13/16" lg x 5/16" wd o/a; material 0.035" thk; mts by two 1/8" diam holes	Secures A-1322 to A-1318		N17-T-350004-196	CTT	102942	102942	A-1323,A-1325	18	1	18
A-1324	BRACKET: feed roll bearing support; "L" shape; steel nickel pl; approx 1-11/32" lg x 15/32" wd x 15/16" h o/a; mtd by two holes 1/8" diam, 1/8" from each end	Supports one end of 0-1387 and mounts 0-1392		N17-T-350003-548	CTT	97556	97556	A-1324	9	0	0
A-1325	Same as A-1323	Secures A-1324 to A-1318									
A-1326	FRAME: right side frame; steel, nickel pl frame w/ bronze bushing; rectangular shape, cutout one corner, bushing press fitted in front; approx 3-11/32" h x 1-1/2" wd x 19/64" thk o/a; mts by five #6-40 thd tapped holes in edges; two tapped holes and four body holes	Supports one end of A-1312, A-1318, 0-1326 and forms cover for one side of distributor-transmitter		N17-T-350010-848	CTT	97501	97501	A-1326	9	0	0
A-1327	BRACKET: spring and latch bracket; "V" shape; steel, nickel pl; 2-19/32" h x 1-13/32" lg x 7/8" wd o/a; mts by two holes tapped #6-40 thd	Supports letters sensing mechanism on number transmitter		N17-T-350003-537	CTT	97543	97543	A-1327	9	0	0
A-1500	BRACKET: slip connection; sq shape; steel, nickel pl; approx 2-5/16" lg x 2-1/8" wd x 1-1/4" d o/a; mts by two #6-40 thd tapped holes; welded in support w/2 tapped holes, body concave one side, corners rounded 1/4" rad	Supports slip connector assembly		4T129333 N17-T-350016-280	CTT	129333	129333	A-1500,A-1700	3	0	0

A-1501	BASE: aluminum, painted light grey finish; approx 16-13/16" lg x 16" wd x 3-31/32" h o/a; mts on four rubber feet; fitted for installation of three Teletype distributor-transmitters and one motor	Supports numbering distributor-transmitters and mechanism	*1	CTT	129332BR	129332BR	A-1501,A-1701	3	0	0
A-1502	PLATE: steel, nickel pl; approx 6-13/16" lg x 2" wd x 3/16" thk; mts by two body holes; four tapped holes	Supports motor and provides means for adjusting mounting height of motor	N17-T-350010-882	CTT	97585	97585	A-1502,A-1702	3	0	0
A-1503	BAR, mounting: iron, nickel pl; "U" shape; approx 6-13/16" lg x 3/8" h x 1" wd o/a; mts by body hole near ea end; two #10-32 thd tapped holes	Supports motor and provides means for adjusting mounting height of motor	N17-T-350003-557	CTT	97584	97584	A-1503,A-1703	3	0	0
A-1504	BRACKET: steel, nickel pl; approx 1-7/8" lg x 7/8" wd x 3/8" thk o/a; mts by two #6-40 thd holes; one 3/8" and one 1/2" hole	Supports S-1500	*1	CTT	129339	129339	A-1504,A-1704	3	0	0
A-1505	BRACKET: "L" shape; steel nickel pl; approx 1-19/32" lg x 1-19/32" h x 5/8" wd o/a; mts by two #6-40 thd and two 3/16" holes	Supports H-1563, H-1564 and 0-1525	4T128274 N17-T-350016-463	CTT	128274	128274	A-1505	1	0	0
A-1506	PLATE, bearing: steel, nickel pl; approx 4-13/16" lg x 2-1/2" wd x 1/8" thk; mts by tapped hole; one large csk hole and small body hole one end, two oval holes and "V" shaped cutout other end	Supports left end of 0-1530	*1	CTT	124153	124153	A-1506,A-1507	2	0	0
A-1507	Same as A-1506	Supports right end of 0-1530								
A-1508	COVER: steel, painted light grey finish; rectangular shape; approx 7-11/16" lg x 3-19/32" wd x 1/16" thk o/a; four 3/16" diam mtg holes; six slots, 1/4" wd x 5" lg	Cover for left side of numbering distributor-transmitter motors	*1	CTT	118448BR	118448BR	A-1508,A-1709	3	0	0
A-1509	COVER: steel, painted light grey finish, rectangular shape; approx 9-3/32" x 3-19/32" wd x 3/4" thk o/a; three 3/16" mtg holes; two slots 5/32" x 13/32" in end, two #6-40 thd holes in welded-in lugs	Cover for left rear of numbering distributor-transmitter bases	*1	CTT	129341BR	129341BR	A-1509,A-1710	3	0	0
A-1510	COVER: steel, painted light grey finish; rectangular w/cut-out; approx 7-5/8" lg x 3-19/32" wd x 1/16" thk o/a; two mtg holes 3/16" diam, two mtg slots 5/32" x 13/32"	Cover for left side of numbering distributor-transmitter bases	*1	CTT	129342BR	129342BR	A-1510,A-1711	3	0	0
			*1 Low Failure item - if required requisition from ESO referencing NavShips 900,180A							

TABLE 8-4. COMBINED PARTS AND SPARE PARTS LIST

PARTS									EQUIPMENT SPARE PARTS	
SYMBOL DESIG.	NAME OF PART AND DESCRIPTION	FUNCTION	JAN OR NAVY TYPE DESIG.	SIGNAL CORPS STANDARD NAVY, AIR FORCE STOCK NO.	MANUFACTURERS CODE	MANUFACTURERS DESIG.	TELETYPE PART NO.	ALL SYMBOL DESIGNATIONS INVOLVED	TOTAL NO. PER EQUIP.	BOX	QUAN
A-1511	PLATE, cover: steel, painted light grey finish; rectangular; approx 5-29/32" lg x 2-1/2" wd x 1/16" thk o/a; one 5/32" and one 3/16" diam mtg hole; four slots 1/4" wd x 5" lg	Provides access to numbering distributor-transmitter base motors		N17-T-350016-365	CTT	128803BR	128803BR	A-1511,A-1712	3	0	0
A-1512	COVER: steel, painted light grey finish; box shape; approx 7-5/16" lg x 6-13/16" wd x 3-27/32" h o/a; one #6-40 thd mtg hole in welded-in lug; rectangular opening in top, 1/4" slots in sides, one 3/16" diam hole in side, 3/32" diam and 5/32" diam hole in top	Cover for numbering distributor-transmitter base motors		*1	CTT	118129BR	118129BR	A-1512,A-1713	3	0	0
A-1513	COVER: steel, light grey paint; rectangular; approx 7-27/32" lg x 3-5/8" wd x 1-3/8" thk o/a; two mtg holes 3/16" diam, two mtg holes 7/16" diam; one 1/2", two 1/8", two 3/32" holes in end, one #6-40 thd hole in welded-on ear	Cover for right front of distributor-transmitter bases		*1	CTT	129344BR	129344BR	A-1513	1	0	0
A-1514	COVER: steel, painted light grey; rectangular shape; approx 15-11/16" lg x 3-1/2" wd x 7/32" thk o/a; three 7/32" mtg holes; four 5/32" slots, one 7/32" x 2-1/32" slot and one 7/32" x 2-23/32" slot in edge, rectangular cutout 11/16" x 25/32" in opposite edge	Covers for top rear of numbering distributor-transmitter base		*1	CTT	128336BR	128336BR	A-1514	1	0	0
A-1515	COVER, top: strip welded one side; steel, nickel pl; approx 4-31/32" lg x 1-13/16" wd x 7/32" h o/a; mts by two #6-40 thd tapped holes; one edge formed, one elongated and one round hole, cutout on strip, small cutout one corner	Covers top of left numbering distributor-transmitter		*1	CTT	118436	118436	A-1515,A-1516 A-1517	3	0	0
A-1516	Same as A-1515	Covers top of center numbering distributor-transmitter									
A-1517	Same as A-1515	Covers top of right numbering distributor-transmitter									

A-1518	DOOR: steel, painted light grey, rectangular; approx 4-15/16" lg x 4-27/32" wd x 1/4" thk o/a; three 5/32" mtg holes in hinge; four #3-48 thd, two #6-40 thd, three 5/32" diam holes	Supports tape reel assembly and covers numbering distributor-transmitter	*1	CTT	129347BR	129347BR	A-1518	3	0	0
A-1520	BRACKET: irregular shape; steel, nickel pl; approx 3-13/32" lg x 1-3/32" wd x 1-3/16" h o/a; mts by one #10-32 thd, two #4-40 and two #6-40 thd holes; one body and two csk holes	Supports tape reel assembly	*1	CTT	128269	128269	A-1520	1	0	0
A-1521	FOOT, mounting: rubber; approx 1-9/16" lg x 1-3/8" wd x 9/16" thk o/a; mts by body hole 19/64" diam; cupped shape	Supports numbering distributor-transmitter base	N17-T-350002-870	ACO	A-273	88924	A-1521	4	0	0
A-1522	COVER: steel, black japan; approx 1-7/16" lg x 1-1/4" wd x 5/16" h o/a; mts by body hole; round extruded tip on face	Supports A-1521	N17-T-350002-871	CTT	88925	88925	A-1522	4	0	0
A-1523	BRACKET: "L" shape; steel, nickel pl; approx 3-1/16" lg x 5/8" wd x 13/16" h o/a; mts by three #6-40 thd holes; two 3/16" body holes thd	Supports R-1500	*1	CTT	117899	117899	A-1523	1	0	0
A-1524	BRACKET: "L" shape; steel, nickel pl; approx 1-3/32" lg x 7/8" h x 13/16" wd o/a; mts by one #6-40 thd hole; one 5/32" hole	Supports R-1501	4T111436 N17-T-350016-439	CTT	111436	111436	A-1524	3	0	0
A-1700	Same as A-1500	Supports slip connectors on message base								
A-1701	Same as A-1501	Supports transmitters and mechanism on message bases								
A-1702	Same as A-1502	Supports motor on message base								
A-1703	Same as A-1503	Supports motor on message base								
A-1704	Same as A-1504	Supports S-1700								
A-1705	COVER, top: stainless steel; approx 15-1/64" lg x 5-3/64" wd x 7/32" thk o/a; mts by six tapped holes; two formed edges, one square hole, one elongated slot, small plate welded to one side	Provides cover for message base mechanism	N17-T-350004-630	CTT	110952	110952	A-1705	2	0	0

*1 Low Failure item- if required requisition from ESO referencing NavShips 900,180A

TABLE 8-4. COMBINED PARTS AND SPARE PARTS LIST

PARTS										EQUIPMENT SPARE PARTS	
SYMBOL DESIG.	NAME OF PART AND DESCRIPTION	FUNCTION	JAN OR NAVY TYPE DESIG.	SIGNAL CORPS STANDARD NAVY, AIR FORCE STOCK NO.	MANUFACTURERS CODE	MANUFACTURERS DESIG.	TELETYPE PART NO.	ALL SYMBOL DESIGNATIONS INVOLVED	TOTAL NO. PER EQUIP.	BOX	QUAN
A-1706	CHUTE, tape: SS; approx 9-1/4" lg x 3-1/4" wd x 1-1/4" d o/a; two mtg holes in welded-on square plate	Guides tape on message bases		N17-T-350016-734	CTT	128668	128668	A-1706	2	0	0
A-1707	DOOR ASSEMBLY: steel, light navy grey; approx 14-15/16" lg x 4-3/4" wd x 1/4" thk o/a; mts by five holes in hinged flap; two body and 12 tapped holes, door has 45° forming	Provides access to message distributor-transmitters		*1	CTT	129346BR	129346BR	A-1707	2	0	0
A-1709	Same as A-1508	Cover for message transmitter base									
A-1710	Same as A-1509	Cover for message transmitter base									
A-1711	Same as A-1510	Cover for message transmitter base									
A-1712	Same as A-1511	Provides access to motor on message transmitter bases									
A-1713	Same as A-1512	Cover for message transmitter bases									
A-1714	COVER, right side: steel, light grey finish; approx 7-27/32" lg x 3-41/64" wd x 1-23/64" h o/a; mts by two 11/64" holes; one large and four body holes in formed end, small extended ear w/tapped hole	Cover for message transmitter bases		*1	CTT	129343BR	129343BR	A-1714	2	0	0
A-1800	COVER: access hole; steel, grey finish; approx 3-3/4" lg x 3-1/2" wd x 1/8" thk o/a; mts by 7/32" diam body hole one corner; extruded area one edge	Provides access to type wheel throw-levers		*1	CYG	12138-S39		A-1800	3	0	0
A-1804	BRACKET: contact support; "L" shape; steel, cad pl; approx 5/8" lg x 5/16" wd x 21/32" h o/a; mts by 13/64" diam hole 3/16" from one end; body hole near other end	Supports S-1800		*1	CYG	12138-S18		A-1804	3	0	0
A-1805	BRACKET: contact support; "V" shape; steel, cad pl; approx 15/16" lg x 5/8" wd x 7/8" h o/a; mts by elongated slot in one end; body hole near other end	Supports S-1800		*1	CYG	12138-S17		A-1805	3	0	0

A-1806	ANCHOR, spring: brass, nickel pl; approx 2-7/16" lg x 11/16" wd x 7/32" thk; mts by two body holes; one edge hook formed, three extruded tapped holes	Supports O-1819	*1	CYG	58408		A-1806	3	0	0
A-1808	STRIP, spring: spring anchor; steel, cad pl; approx 2-15/16" lg x 7/16" wd x 1/16" thk o/a; mts by two body holes; three tapped holes	Supports O-1823	*1	CYG	58863		A-1808	3	0	0
A-1809	PLATE, dial: steel, cad pl; rectangular shape; notch in one edge; 2-15/64" lg x 1-1/8" wd x 0.050" thk o/a; mts by two body holes on one edge	Holds the side frames together	*1	CYG	12138-S5		A-1809	3	0	0
A-1810	STRIP, spring: anchor strip; steel, cad pl; approx 2-3/32" lg x 1/4" wd x 0.040" thk material; mts by ends and body hole; corner cutout ea end, three csk spring holes	Anchors O-1826 and O-1827	*1	CYG	58410		A-1810	3	0	0
A-1812	STRAP, tie: brass, nickel pl; both ends rounded; approx 2-21/64" lg x 1/2" wd x 0.062" thk o/a; mts by end body holes; one ctr body hole	Secures B-1800 to A-1802	*1	CYG	72464		A-1812	3	0	0
A-1813	STRAP, bearing: brass strap, steel stud; one end rounded, body formed twice near straight end; approx 2-7/32" lg x 3/8" wd x 9/16" h o/a; mts by body hole near ea end; stud riveted to ctr of strap	Secures O-1850, O-1851 and O-1852 to B-1800	*1	CYG	12138-S6		A-1813	3	0	0
A-1814	BRACKET: relay support; "L" shape; brass; approx 1-1/2" lg x 1" wd x 3/4" h o/a; mts by two 5/32" diam holes in slotted end; two body holes other end	Supports K-1800 -	*1	CYG	12138-S10		A-1814	3	0	0
A-1815	YOKE, magnet: iron, cad pl; "U" shape; approx 3-1/2" lg x 1-1/2" wd x 2-5/32" h, 3/16" thk material; mts by four tapped holes; center body hole and three csk holes in base, body hole one side, squared cutout ea end	Supports L-1800	*1	CYG	58361		A-1815	3	0	0
A-1816	BRACKET: contact support; "L" shape; steel, cad pl; approx 1/2" lg x 3/8" wd x 7/16" h o/a; mts by elongated hole in one end; body hole near other end	Supports S-1801	*1	CYG	12138-S13		A-1816	3	0	0

*1 Low Failure item - if required requisition from ESO referencing NavShips 900,180A

TABLE 8-4. COMBINED PARTS AND SPARE PARTS LIST

PARTS										EQUIPMENT SPARE PARTS	
SYMBOL DESIG.	NAME OF PART AND DESCRIPTION	FUNCTION	JAN OR NAVY TYPE DESIG.	SIGNAL CORPS STANDARD NAVY, AIR FORCE STOCK NO.	MANUFACTURERS CODE	MANUFACTURERS DESIG.	TELETYPE PART NO.	ALL SYMBOL DESIGNATIONS INVOLVED	TOTAL NO. PER EQUIP.	BOX	QUAN
A-1817	BRACKET: contact support; "L" shape; steel, cad pl; approx 1-1/16" lg x 3/8" wd x 3/4" h o/a; mts by elongated hole near other end	Supports S-1801		*1	CYG	12138-S14		A-1817	3	0	0
A-1818	BRACKET: straight body w/2 formed arms one end; steel, nickel pl; approx 3" lg x 11/16" wd x 1-3/16" h o/a; mts by two elongated holes; two tapped holes in straight arm post and support rivet on other arm	Supports ribbon drive ratchet assembly		*1	CYG	12138-S41		A-1818	3	0	0
A-1821	PLATE, mounting: brass; rectangular shape; approx 1-3/8" lg x 7/16" wd x 3/32" thk o/a; mts by #6-32 tapped hole near ea end	Supports L-1801		*1	CYG	12138-S24		A-1821	3	0	0
A-1901	PANEL, tape container: contains two welded nuts; cold rolled steel; approx 8-31/32" lg x 29/32" wd x 7-19/32" h o/a; 10 untapped mtg holes 11/16" diam, two untapped mtg holes 1/4" diam, one #4-40 thd mtg hole	Rear panel for tape container		*1	CTT	111535	111535	A-1901,A-1902	8	0	0
A-1902	Same as A-1901	Forward panel for tape container									
A-1903	BLOCK, mounting: aluminum, anodized; rectangular shape; approx 1-1/2" lg x 7/8" wd x 3/8" thk o/a; five tapped mtg holes #6-40 thd	Mounts A-1901 and A-1902		4T128627 N17-T-350016-237	CTT	128627	128627	A-1903	4	0	0
A-1904	BLOCK, mounting: composed of back spacer spring post and block; steel; approx 1-5/16" lg x 3/8" wd x 7/16" h o/a; one tapped mtg hole #6-40 thd; two untapped mtg holes 3/32" and 5/32" diam; key slot 5/16" d	Support and pivot for 0-1904		4T123852 N17-T-350016-238	CTT	123852	123852	A-1904	4	0	0
A-1905	BLOCK: aluminum, anodized; rectangular shape; approx 2-29/32" lg x 7/8" wd x 3/8" thk o/a; four #6-40 thd mtg holes; two #4-40 thd mtg holes; one #8-32 thd mtg holes; one untapped 5/32" mtg hole; end slot approx 3/8" wd x 5/8" d	Mounts A-1901, A-1902, A-1904 and tape-out contact assembly		N17-T-350016-364	CTT	128602	128602	A-1905	4	0	0

A-1906	Same as A-308	Secures E-1900 to A-1905						0	0
A-1907	BLOCK ASSEMBLY, mounting: mts spring post; composed of spring post, part/dwg #74692; mtg block, part/dwg #128602; post, screw steel; block aluminum, anodize; rectangular shape; approx 2-29/32" lg x 7/8" wd x 3/8" thk o/a; four #6-40 thd mtg holes; two #4-40 thd mtg holes; one #8-32 thd mtg hole; end slot approx 3/8" wd x 5/8" d	Supports E-1900	CTT	128628	128628	A-1907	4	0	0
A-1921	Same as A-320	Bracket for tape container							
A-1922	DEFLECTOR, tape: nickel silver; "U" shaped; approx 1-3/32" lg x 7/16" wd x 1-3/16" h o/a; mts by clamping	Deflects tape to feedout beyond cabinet wall	CTT	129083	129083	A-1922	4	0	0
A-1998	BIN, tape: steel, light navy grey finish; enclosed on five sides, top open, front rounded on bottom; 15-3/4" h x 12-1/2" wd x 6" d o/a; mts by two inverted "keyholes" 3" c to c at top	Catches tape from incoming messages	CTT	128595BR	128595BR 4T128595BR N17-T-350016-642	A-1998	2	0	0
A-1999	POST, supporting: steel, nickel pl; 5/16" sq x 2-5/32" lg o/a; mts by #8-32 hole in one end; #8-32 hole near other end	Supports TB-1999 mtg bar	CTT	128745	128745 4T128745 N17-T-350016-638	A-1999	4	0	0
A-2099	BRACKET: "L" shape; steel, nickel pl; approx 2-3/8" lg x 1-1/4" wd x 15/16" h o/a; mts by two elongated holes 3/4" c to c; csk hole, #6-40 thd hole and cutout in large side	Pivot support for control panel rack and guide for 0-2099	CTT	128752	128752 N17-T-350016-637	A-2099	1	0	0
A-2101	BRACKET: irregular "U" shape casting; bronze; approx 4-27/32" lg x 3-29/64" wd x 4-3/8" h o/a; mts by five #10-32 thd holes in base; Torrington #GB-55 needle bearing press fitted in one side in line w/bushing on other side, irregularly tapped and drilled	Supports tape-feedout mechanism	CTT	135017	135017 N17-T-350016-748	A-2101	4	0	0
A-2102	BRACKET: lever support; irregular shape, one end formed, formed arm one side w/rivet ed spring post near end; steel, nickel pl; 2-5/8" lg x 1" wd x 1-1/2" h o/a; 0.095" thk; mts by ctb hole and body hole 1" c to c; body hole in formed end	Support for 0-2105	CTT	129994	129994 N17-T-350016-746	A-2102	4	0	0

*1 Low Failure item - if required requisition from ESO referencing NavShips 900,180A

TABLE 8-4. COMBINED PARTS AND SPARE PARTS LIST

PARTS										EQUIPMENT SPARE PARTS	
SYMBOL DESIG.	NAME OF PART AND DESCRIPTION	FUNCTION	JAN OR NAVY TYPE DESIG.	SIGNAL CORPS STANDARD NAVY, AIR FORCE STOCK NO.	MANUFACTURERS CODE	MANUFACTURERS DESIG.	TELETYPE PART NO.	ALL SYMBOL DESIGNATIONS INVOLVED	TOTAL NO. PER EQUIP.	BOX	QUAN
B-401	MOTOR, AC: shaded pole type; 1/40 hp, 1550 rpm; open frame; 50 C temp rise; pinion not incl, #6-40 thd hole in shaft; approx 5-3/8" lg x 3-15/16" diam o/a; shaft 5/16" diam protruding 1-1/4" from frame; 115 v AC, 60 cyc, single ph, 1.5 amp; flange mtd; permanent lubrication	Operates reeling machine RL-173/FGC			CTT	126987	126987	B-401	3	0	0
B-700	FAN: centrifugal type; electric motor operated; 24 blades; guarded; approx 4" OD x 3/8" ID x 1-3/16" lg o/a; direct drive; steel, black high gloss enamel; mts by ctb hole in hub	Cools sync motor		N17-T-350001-985	CTT	76484	76484	B-700	10	0	0
B-800	MOTOR, AC: sync motor; 1/40 hp, 1800 rpm; 25-A frame; 40 C max temp rise; tapped hole in shaft for pinion; approx 6-3/32" lg x 4-3/4" wd x 4-13/16" h, shaft protrudes 1-1/4" one end and 11/16" other end; 110 v AC, single ph, 2.2 amps; aluminum base; foot mtd; four mtg holes; ball bearings	Used on TT-161/FGC-38, TT-163/FGC-39, TT-164/FGC-38, TT-166/FGC-39		N17-T-350005-916 1730-485922000	CTT	82283	82283	B-800,B-1500 B-1700	10	0	0
B-801	MOTOR, AC: series type; 1/25 hp, 1800 rpm; 40°C temp rise; tapped hole near ea end of shaft; approx 5-1/2" lg x 5-1/16" wd x 5" h, 3/8" diam shaft extends 1-1/4" one end and 5/8" other end; 110 v AC; 60 cyc, single ph; 1.5 amp; GE frame #65A; fixed base; elongated mtg hole at four corners	Used on TT-162/FGC-38X, TT-165/FGC-38X		N17-T-350015-690	CGM	5BA65AA-77A	122295	B-801,B-1501 B-1701	10	0	0
B-1500	Same as B-800	Used on MT-1372/FGC-38, MT-1374/FGC-39									
B-1501	Same as B-801	Used on MT-1373/FGC-38X									
B-1700	Same as B-800	Used on MT-1369/FGC-38, MT-1371/FGC-39									
B-1701	Same as B-801	Used on MT-1370/FGC-38X									

B-1800	MOTOR, AC: sync type; 4 w, 1 rpm; closed frame; pulley not included, plain shaft; approx 1-3/4" lg x 2-1/4" wd x 2-9/16" h o/a; shaft 1/8" diam protruding 3/8" from frame, 115 v AC, 60 cyc, single ph; fixed mtg; mts by two internal thd posts on 1-3/4" mts ctr	Drives time stamp mechanism	N17-M-54301-1008	CYG	58962	129726	B-1800	3	0	0
B-1801	ARMATURE, motor: steel shaft, copper wire, copper container, zinc pl; 110/120 v AC, 60 cyc; 4 w, 1 rpm, round, keyed shaft extends one end, 5/8" diam enclosure extends other end; approx 2" lg x 1-5/16" diam o/a; stamped "TOP" and technical data; hermetically sealed	Replaceable unit in time stamp motor	N17-T-350016-388 1730-044771003	CYG	63697	128282	B-1801	3	1	3
C-101	CAPACITOR, fixed: paper dielectric; 2.0 mf; 500 vdcw; hermetically sealed metal can; case dimen 2-1/8" h x 1-3/16" wd x 1-1/8" thk; impregnated w/synthetic resin wax, potted w/resin-petroleum compound, two solder lug term on top; internally grounded; #8-32 thd mtg stud between	Filter for K-105 contacts A and C		CAU	D-685-64-A	129408	C-101,C-104 C-205	11	0	0
C-102	CAPACITOR, fixed: paper dielectric; 0.2 mf; 500 vdcw; hermetically sealed metal can; case dimen 2-1/8" h x 1-3/16" wd x 5/8" thk; impregnated w/synthetic resin wax, potted w/resin-petroleum compound; two solder lug term on top; internally grounded; #8-32 thd mtg stud between terminal	Filter for K-101 contact 3		CAU	D-686-41-A	129406	C-102,C-103 C-202	11	0	0
C-103	Same as C-102	Filter for K-101 contacts 1 and 2								
C-104	Same as C-101	Filter for K-103 contacts 4 and 5								
C-105	CAPACITOR, fixed: paper dielectric; 0.5 mf; 500 vdcw; hermetically sealed metal can; case dimen 2-1/8" h x 1-3/16" wd x 5/8" thk; impregnated w/synthetic resin wax, potted w/resin-petroleum compound, two solder lug term on top; internally grounded; #8-32 thd mtg stud between terminal	Filter for K-101 contacts 1 and 2		CAU	D-685-92-A	129407	C-105,C-106 C-203,C-208	14	0	0
C-106	Same as C-105	Filter for K-105 contacts A and C								
C-201	CAPACITOR, fixed: paper dielectric; 0.01 mf; 600 vdcw; body dimen 1-1/4" lg x 3/8" diam; axial wire leads; uninsulated	Filter for K-201 contact 3	N16-C-42736-9799 3330-055725161	OMA	PT-611	129495	C-201	3	0	0

TABLE 8-4. COMBINED PARTS AND SPARE PARTS LIST

PARTS										EQUIPMENT SPARE PARTS	
SYMBOL DESIG.	NAME OF PART AND DESCRIPTION	FUNCTION	JAN OR NAVY TYPE DESIG.	SIGNAL CORPS STANDARD NAVY, AIR FORCE STOCK NO.	MANUFACTURERS CODE	MANUFACTURERS DESIG.	TELETYPE PART NO.	ALL SYMBOL DESIGNATIONS INVOLVED	TOTAL NO. PER EQUIP.	BOX	QUAN
C-202	Same as C-102	Filter K-202 contacts 3 and 4									
C-203	Same as C-105	Filter for K-206 contact A									
C-204	CAPACITOR, fixed: paper dielectric; single section; 0.100 mf; 500 v DC; 7/8" lg x 7/8" diam, excluding term, 3/16" ID; wax impregnated, cellulose acetate coating; two solder lug term, locate on top; no internal ground connections; mts by ID	Filter for K-208 contact 7		N16-C-45814-9190	CAU	D-682-75-A	129405	C-204,C-206 C-207,C-209	12	0	0
C-205	Same as C-101	Filter for K-206 contact C									
C-206	Same as C-204	Filter for K-209 contact 4T									
C-207	Same as C-204	Filter for K-205 contact 6T									
C-208	Same as C-105	Filter for K-209 contact 3B									
C-209	Same as C-204	Filter for K-209 contact 6B									
C-501	CAPACITOR: electrolytic	Filter for negative filtered power supply output	CE41CZZIK	N16-C-20490-1061	CSF	JAN CE41C 221K	151914	C-501,C-502 C-503	6	0	0
C-502	Same as C-501	Filter for negative filtered power supply output									
C-503	Same as C-501	Filter for positive power supply output									
C-600	CAPACITOR, fixed: paper dielectric; 1.0 mf; 1,000 vdcw; hermetically sealed metal can; 2" h x 1-3/16" sq; wax impregnated and filled; two 1/2" h solder lug term on top; no internal ground connections; two mtg ears w/1/8" diam hole in ea on bottom, 1-1/2" c to c	Power factor connector for governor motor		N17-T-350012-433	CTD	FMSP-1001B	83054	C-600	7	1	9
C-601	CAPACITOR, fixed: paper dielectric; single section; 0.1 mf; test voltage 1,200 v DC; lead incased; 2" lg x 21/32" wd x 11/32" thk o/a; wax impregnated; two wire terms, min length 3-3/4"	Filter for governor contacts		N16-C-45797-5901	CW	363A	95938	C-601,C-602 C-1300	39	1	9

C-602	Same as C-601	Filter for governor contacts								
C-603	CAPACITOR, fixed: paper dielectric; 1 section; 0.010 mf; test voltage 1,200 v DC; lead incased; 1-3/8" lg x 21/32" wd x 11/32" thk; wax impregnated; two wire terms, min length 3"	Filter for governor contacts	N16-C-42947-5955 3300-48550000	CW	362B	95937	C-603,C-1301	29	0	0
C-604	CAPACITOR, fixed: paper dielectric; 1.0 mf ±10%; 1,000 vdcw; hermetically sealed metal can; 2" lg x 3/4" wd x 4-9/16" h; wax filled and impregnated; two solder lug terms located on top; no internal ground connections; mtd in box and cover	Filter for governor contacts	N17-T-350005-900 3330-48384000	CIE	4342FW	78011	C-604	3	0	0
C-700	CAPACITOR, fixed: paper dielectric; 500,000 mmf ±20%; 1,000 vdcw; hermetically sealed metal can; 2" h x 1-3/16" wd x 11/16" d; wax impregnated and filled; two solder lug term 1/2" h located on top, spaced 1/2" c to c; no internal ground connections; two mtg ears 1-1/2" c to c on bottom	Suppressor for S-800 and S-801	3DA500-917 N16-C-47329-8406	CTD	FM1050	114066	C-700	4	0	0
C-1300	Same as C-601	Filter for contacts E-1313 and E-1315								
C-1301	Same as C-603	Filter for contacts E-1317 and E-1318								
C-1500	CAPACITOR, fixed: paper dielectric; 3 section; 100,000 mmf; 1,000,000 mmf; 10,000 mmf; 110 vdcw; hermetically sealed metal can; 1-11/32" h, 1-3/8" wd, 3/4" thk; wax filled; six wire pigtail terminals; two 5/32" diam holes on 1-5/8" centers	Filters for L-1300 and L-1301	N17-T-350005-945	CW	313-C	94679	C-1500	9	1	6
C-1801	CAPACITOR, fixed: paper dielectric; 1.0 mf; 400 vdcw; hermetically sealed metal can; 2-1/8" lg x 1" diam; wax impregnated; two wire lead term, 2-3/8" lg mtg end, 8-1/4" lg other end; internally grounded; mts by 5/16"-24 bushing 1/4" lg, nut and lock washer one end; feed through type	Filter for MX-1527/U		CSF	P-1840TH	129321	C-1801,C-1802	6	1	3
C-1802	Same as C-1801	Filter for MX-1527/U								
E-101	INSULATOR: round, w/shoulder 1/32" lg x 1/4" diam; natural color phenolic; approx 7/16" ID x 3/32" thk o/a; mts by ID	Insulator for K-101, K-102 and K-103	N17-T-350008-620 3320-081551940	CAU	D-75321	79012	E-101,E-205	144	0	0

TABLE 8-4. COMBINED PARTS AND SPARE PARTS LIST

PARTS

SYMBOL DESIG.	NAME OF PART AND DESCRIPTION	FUNCTION	JAN OR NAVY TYPE DESIG.	SIGNAL CORPS STANDARD NAVY, AIR FORCE STOCK NO.	MANUFACTURERS CODE	MANUFACTURERS DESIG.	TELETYPE PART NO.	ALL SYMBOL DESIGNATIONS INVOLVED	TOTAL NO. PER EQUIP.	EQUIPMENT SPARE PARTS BOX	EQUIPMENT SPARE PARTS QUAN
E-102	INSULATOR, plate: flat, square shape, brown, phenolic; approx 1-1/4" lg x 1-3/16" wd x 1/32" thk; one 1/4" and six 1/8" body holes	Insulator for K-101, K-102 and K-103		N17-I-64091-4045 3320-082351850	CAU	D-44469	79967	E-102,E-206	44	0	0
E-103	WASHER, flat: clear phenolic PS grade; round, approx 5/8" OD x 11/64" ID x 1/16" thk	Insulator for R-101, R-102, R-103 and R-104		N17-T-350005-816 3320-081800330	CTT	89969	89969	E-103,E-207	32	0	0
E-104	CLAMP, cable: ethyl cellulose plastic; one bolt employed; approx 1-3/32" lg x 1/2" wd x 5/8" h o/a; accommodates 1/2" cable	Clamp for cable in SB-357/FGC			CPC	742-8	121248	E-104	4	0	0
E-204	TERMINAL, lug: straight type; brass; for #14 AWG wire; approx 1-3/8" lg x 5/16" wd x 3/16" h o/a; w/11/64" stud hole; solder connects to wire; formed ear	Terminal for S-206		N17-T-350009-974	CW	P-216277	91230	E-204	4	0	0
E-205	Same as E-101	Insulator for K-202, K-203, K-204, K-205, K-207, K-208, K-209 and K-210									
E-206	Same as E-102	Insulator for K-202, K-203, K-204, K-205, K-207, K-208, K-209 and K-210									
E-207	Same as E-103	Insulator for S-206									
E-208	KNOB: round; black bakelite; for 9/64" diam shaft; #6-32 thd; approx 3/4" lg x 3/8" OD; brass insert - if available; straight knurl	Switch handle		N17-T-350013-786	CTT	100934	100934	E-208	28	0	0
E-212	INSULATOR, bushing: round; grey wax impregnated fiberoid; approx 11/16" OD x 25/64" thk o/a; shoulder one side 31/64" diam x 0.046" lg	Insulator for J-225		N17-T-350004-422	CTT	105862	105862	E-212	4	0	0
E-213	INSULATOR, flat: phenolic; round, approx 5/8" OD x 3/8" ID x 1/32" thk o/a	Insulator for J-225		N17-I-77259-4301	CRA	4508	114119	E-213	4	0	0
E-214	SPRING: flat type; 0.025" nickel silver; approx 31/32" lg x 7/8" wd x 1/16" thk o/a; irregular shape, LH mtg	Connector for SB-357/FGC		4T113185 N17-T-350016-423	CAU	D-10958	113185	E-214,E-1300	141	0	0

E-215	SPRING: flat type; 0.025" nickel silver; approx 31/32" lg x 7/8" wd x 1/16" thk o/a; irregular shape, RH mtg	Connector for SB-357/FGC	4T113184 N17-T-350016-422	CAU	D-10961	113184	E-215,E-1302	141	0	0
E-216	INSULATOR: flat irregular shape; bakelite; approx 7/8" h x 25/32" wd x 1/16" thk o/a	Insulator for E-214 and E-215	30320-502 N17-I-67017-9864	CAU	D-44318	113186	E-216,E-1301	141	0	0
E-217	INSULATOR, switch jack: rectangular shape; bakelite natural color; approx 4-3/16" lg x 7/16" wd x 0.031" thk o/a; four body holes	Insulator for E-214 and E-215	*3	CAU	D-44409-B	129491	E-217	8	0	0
E-218	TERMINAL: spring mtg; bakelite, natural color; mts by four ctb holes; approx 4-9/32" lg x 1/2" wd x 1/2" h o/a; 12 slots along one side	Mounts E-212, E-213 and E-214	N17-T-350016-386	CAU	D-42560	129492	E-218	6	0	0
E-301	INSULATOR, plate: rectangular shape; fiber, grey; 3-15/32" lg; 1-1/2" wd x 1/32" thk, mts by four 7/32" holes	Insulates terminal board on fuse block assembly	*3	CMG	MSG-142	117367	E-301	1	0	0
E-304	INSULATOR, plate: rectangular; brown bakelite; approx 11/16" lg x 5/16" wd x 1/16" thk o/a; two 3/16" diam mtg holes	Insulator for E-303 and E-305	N17-T-350012-710 1730-481932500	CTT	41733	41733	E-304,E-611 E-613,E-1304 E-1321,E-1323 E-1324,E-1901	112	0	0
E-305	SPRING, contact: c/o CTT parts #81720, #77697, #103670, #103792; flat strip w/rectangular block and cont fastened on; approx 2-3/16" lg x 5/16" wd x 7/32" h o/a; two mtg holes	Contactor for E-301	N17-T-350006-527	CTT	81721	81721	E-305,E-1903	5	0	0
E-306	TERMINAL, contact: solder lug type; brass; approx 11/16" lg x 9/16" wd x 0.020" thk o/a; solder connects to wire; two mtg holes; part of Teletype contact assembly #128837	Terminal contact for E-305	N17-T-350008-818	CTT	81726	81726	E-306,E-1306 E-1322,E-1325 E-1904,E-1906	37	0	0
E-307	SPRING, contact: c/o cont #82928, fastened to spring #74963; approx 1-3/4 lg x 5/16" wd x 3/16" thk o/a; two mtg holes	Contact for E-301	N17-T-350006-558	CTT	82927	82927	E-307,E-1905	5	0	0
E-308	INSULATOR, strip: rectangular shape; natural color bakelite, PS grade; approx 1-25/32" lg x 5/16" wd x 1/32" thk o/a; two mtg holes	Insulator for E-301	*3	CTT	111098	111098	E-308	1	0	0
E-309	INSULATOR, bushing: bakelite; male or female; approx 15/32" lg x 3/16" OD x 1/8" ID	Insulator for H-324	N17-T-350005-918	CTT	82444	82444	E-309	2	0	0

*3 Shop Manufacture

TABLE 8-4. COMBINED PARTS AND SPARE PARTS LIST

PARTS										EQUIPMENT SPARE PARTS	
SYMBOL DESIG.	NAME OF PART AND DESCRIPTION	FUNCTION	JAN OR NAVY TYPE DESIG.	SIGNAL CORPS STANDARD NAVY, AIR FORCE STOCK NO.	MANUFACTURERS CODE	MANUFACTURERS DESIG.	TELETYPE PART NO.	ALL SYMBOL DESIGNATIONS INVOLVED	TOTAL NO. PER EQUIP.	BOX	QUAN
E-501	INSULATOR, plate: rectangular shape, bakelite, natural color; approx 2-7/8" lg x 1-1/8" wd x 1/32" thk o/a; mts by 5/32" diam holes four places; white letters 1/8" h, A to F, equidistant on one edge	Insulator for TB-502		*1	CAIU	IN-181S	129438	E-501	2	0	0
E-502	INSULATOR, plate: rectangular shape; bakelite; approx 3-5/8" lg x 1-1/8" wd x 1/32" thk o/a; mts by four 5/32" body holes; eight 3/32" holes in line one side	Insulator for TB-501		*3	CAIU	IN-217S	129439	E-502	2	0	0
E-503	SHIELD, insulator: lucite, clear; flat, rectangular shape; approx 3-3/4" lg x 1-5/16" wd x 3/32" thk o/a; mts by 1/8" diam body holes ea end; eight 3/16" diam holes in line on one edge	Insulator for TB-502		*1	CTT	129440	129440	E-503	2	0	0
E-600	RING ASSEMBLY: brush holder; c/o CTT #94264 ring, CTT #6807 screw; copper alloy ring, steel screw; approx 9/16" ID x 1" OD x 1/4" thk o/a; mts by OD	Contact between E-605 and E-603		N17-T-350007-592	CG	V-3513-634	71998	E-600	20	0	0
E-601	WASHER, flat: fiber, round, approx 1-1/2" OD x 17/32" ID x 0.010" thk	Insulates E-600 from A-601		N17-T-350010-170	CTT	91837	91837	E-601	20	0	0
E-602	HOLDER, brush: bakelite w/brass insert; approx 1-7/16" lg x 25/32" diam o/a; mts by OD and 5/16" lg x 17/32" diam shoulder; ID threaded w/1/2"-32 thd one end, brush guide slot through remainder of ID	Support E-603		N17-T-350007-492	CTT	70872	70872	E-602	20	0	0
E-603	BRUSH, electrical contact: commutator brush; carbon; rectangular, 23/32" lg x 3/8" wd x 1/4" thk; single dovetail shoulder at holder end; commutator end concave; stamped "3860"; copper pigtail and spring 1-3/8" lg at shoulder	Contact between E-608 and power supply		N17-T-350006-285	CTT	8094	8094	E-603	20	1	18
E-604	CAP: brush holder; bakelite cap w/brass insert; approx 11/16" diam x 1/2" lg o/a; mts by 1/2"-32 threaded shank 1/4" lg; knurled cap, drive slot w/body hole in ctr threaded w/#6-32 thd through insert	Holds E-603 in motor		N17-T-350007-493	CTT	70873	70873	E-604	20	1	18

E-605	WINDING, motor field: enameled copper wire, varnish dipped and baked; 3.3 ohms current resistance, 110 v, 168 turns per coil, 0.0285" diam wire; round steel field w/2 coils; approx 2-17/32" lg x 4" wd x 4-7/16" h less leads; mts by two 7/32" diam slotted body holes through field; two leads 23" lg and two leads 5-1/2" lg terminated w/Teletype #6807 set screws and #94264 brush holder rings, tropical treated	Operates E-608		N17-T-350007-796	CTT	73238	73238	E-605	10	0	0
E-606	COIL, field: governed motor field coil; c/o Teletype part/dwg #71998 and #73242; 110 v AC, 60 cyc, 3.3 ohms DC resistance; toroidal shape; approx 3-1/4" lg x 2-7/8" h x 1" thk o/a	Operates E-608		N17-T-350007-797	CG	22798	73239	E-606	20	0	0
E-607	INSULATION, set: field coil; c/o A and B units; "A" part fiber rawhide covered, "B" part fiber; A part "U" shape, B part rectangular; approx A part 3/4" h x 7/8" lg x 13/16" w o/a; B part 5-1/16" lg x 13/32" w o/a	Insulates E-606 from field core		N17-T-350007-800	CG	A part #M-50571 75AA GR-2, B part #M-505719 AB GR-20	73242	E-607	20	0	0
E-608	ARMATURE, motor: includes Teletype #80358 ball bearing; steel shaft, soft iron core and copper wire; 110 v AC; 1/25 hp, 1800 rpm; approx 7-3/8" lg x 2-3/8" diam o/a; bearings 3/8" ID and 4-1/4" c to c; #6-40 tapped hole near ea end	Drives the motor pinion		N17-T-350015-796	CTT	122296	122296	E-608	10	0	0
E-609	BRUSH: lower inner disk; carbon, copper pl at shoulder, Natl Carbon grade 9613; cylindrical shape, 1/4" diam x 17/64" lg brush arm and spring riveted together 3-5/16" lg o/a; mts elongated slot in end of spring; commutator end flat	Connection between governor contact and motor armature		N17-T-350002-110	CTT	78400	78400	E-609	10	1	18
E-610	WASHER, flat: bakelite, PS grade; rectangular shape, one end rounded, approx 3/4" lg x 5/16" wd x 1/16" thk o/a; two 3/16" diam body holes	Insulator between E-612 and A-609		N17-T-350002-232	CTT	80336	80336	E-610,E-617	20	0	0
E-611	Same as E-304	Insulator between A-606 and E-609									

*1 Low Failure item - if required requisition from ESO referencing NavShips 900,180A

*3 Shop Manufacture

TABLE 8-4. COMBINED PARTS AND SPARE PARTS LIST

PARTS										EQUIPMENT SPARE PARTS	
SYMBOL DESIG.	NAME OF PART AND DESCRIPTION	FUNCTION	JAN OR NAVY TYPE DESIG.	SIGNAL CORPS STANDARD NAVY, AIR FORCE STOCK NO.	MANUFACTURERS CODE	MANUFACTURERS DESIG.	TELETYPE PART NO.	ALL SYMBOL DESIGNATIONS INVOLVED	TOTAL NO. PER EQUIP.	BOX	QUAN
E-612	TERMINAL, lug: straight type; brass, tinned ear; approx 15/16" lg x 5/16" wd x 0.020" thk o/a; solder connects to wire; two mtg holes, elongated wire hole in ear	Connection between E-609 and motor		N17-T-350008-651	CTT	80334	80334	E-612,E-618	20	0	0
E-613	INSULATOR, bushing: bakelite, natural color, grade XX; male; approx 9/64" lg x 3/16" OD x 1/8" ID o/a	Insulates H-633		N17-T-350002-108	CTT	78398	78398	E-613,E-616	40	0	0
E-614	BRUSH: upper outer disk; carbon copper pl at shoulder, Natl Carbon grade 9613; cylindrical shape, 1/4" diam x 17/64" lg, brush arm and spring riveted together, 3/16" lg o/a; mts by elongated slot in end of spring; commutator end flat	Connection between governor contacts and motor armature		N17-T-350002-109	CTT	78399	78399	E-614	10	1	18
E-615	Same as E-304	Insulator between A-610 and E-618									
E-616	Same as E-613	Insulates H-636									
E-617	Same as E-610	Insulator between E-614 and A-609									
E-618	Same as E-612	Connection between E-614 and governor motor									
E-619	INSULATOR, bushing: round shape; black bakelite; approx 19/32" lg o/a; must withstand a min of 200 v DC per mill applied for one sec; approx 7/16" OD x 13/64" ID, shoulder 9/32" lg x 9/32" OD	Insulator between O-612 and O-613		N17-T-350005-901	CTT	78438	78438	E-619	10	0	0
E-620	INSULATOR, disk: irregular shape; phenolic, black; 1" lg x 1" wd x 1/8" thk o/a; min 200 v DC per mill applied for one sec; axial mtg hole 9/32" diam; one side rounded other side cut off	Insulator between O-614 and O-615		N17-T-350002-107	CTT	78437	78437	E-620	10	0	0
E-621	SCREW, contact: wrench drive; steel, nickel pl; #6-32; approx 3/8" lg o/a; 3/16" lg threaded portion; head 3/32" thk x 1/4" across flats; 1/4" diam x 1/16" thk contact brazed on head	Contact between O-622 and O-615		N17-T-350012-623	CTT	6320	6320	E-621	10	1	9

E-622	TERMINAL, sleeve: ring type; tinned copper; for 16 to 22 AWG wire; approx 41/64" lg x 19/64" wd x 13/64" h o/a; solder connects to wire	Connection between C-601 and governor motor brush		N17-T-350012-432	CTT	82474	82474	E-622,E-706 E-712,E-1310 E-1320,E-1512 E-1708	279	0	0
E-623	WASHER, flat: bakelite natural color; round approx 3/8" OD x 3/16" ID x 0.051" thk	Insulator between L-600 and H-683		N17-T-350005-804	CTT	78905	78905	E-623,E-624	20	0	0
E-624	Same as E-623	Insulator between L-600 and A-614									
E-625	INSULATOR, bushing: bakelite, natural color, grade XX; male; approx 11/16" lg x 9/64" ID x 3/16" diam o/a	Insulates H-684		N17-T-350010-636	CTT	95935	95935	E-625	10	0	0
E-626	WASHER, flat: natural color bakelite; round, 1/2" OD x 11/64" ID x 0.062" thk o/a	Insulator between A-617 and R-601		N17-T-350008-377 1730-483682000	CTT	75750	75750	E-626,E-627 E-708,E-709 E-710,E-711	32	1	6
E-627	Same as E-626	Insulator between H-698 and R-601									
E-628	INSULATOR, strip, rectangular shape; MICA; approx 2" lg x 25/32" wd x 1/64" thk o/a	Insulates R-602, R-603 and E-629		N17-T-350007-471	CTT	70724	70724	E-628,E-631	6	0	0
E-629	CONTACT, governor: c/o formed spring w/tungsten contact one end and cut-out plate other end; steel, nickel pl; approx 1-5/8" lg x 11/16" h x 3/8" wd o/a; mts by spring post	Contact between governor motor field and power supply. Provides means of adjusting motor speed		N17-T-350001-427	CTT	6314	6314	E-629	10	1	9
E-631	Same as E-628	Insulates R-602 and R-603 from A-618									
E-632	INSULATOR, plate: rectangular shape, chocolate, black or natural color, PS grade bakelite; 4-11/16" lg; 2-1/8" wd x 1/32" thk	Insulation between R-605 and A-618		N17-T-350005-858 3320-082352000	CTT	3094	3094	E-632,E-633 E-635	9	0	0
E-633	Same as E-632	Insulator between R-604 and C-604									
E-634	INSULATOR, bushing: round, tube shape; black vinyl tubing; approx 15/16" lg x 13/64" ID x 1/4" OD o/a; mts by ID	Insulates one H-704		*3	CTT	129524	129524	E-634	3	0	0
E-635	Same as E-632	Insulator between C-604 and H-708									
E-701	ARMATURE, motor: c/o CTT #82843 spring, #82848 brush w/holder, #88879 brush holder support; steel shaft and core copper wire; 110 v AC, 60 cyc; 1/40 hp, 1800 rpm; approx 8" lg x 2-7/32" diam o/a; bearing shoulders approx 7/16" diam x 4-3/4" c to c; stamped "5SH25AB11B"	Operates motor pinion		N17-T-350002-393	CTT	82840	82840	E-701	10	0	0

*3 Shop Manufacture

TABLE 8-4. COMBINED PARTS AND SPARE PARTS LIST

PARTS									EQUIPMENT SPARE PARTS	
SYMBOL DESIG.	NAME OF PART AND DESCRIPTION	FUNCTION	JAN OR NAVY TYPE DESIG.	SIGNAL CORPS STANDARD NAVY, AIR FORCE STOCK NO.	MANUFACTURERS CODE	MANUFACTURERS DESIG.	TELETYPE PART NO.	ALL SYMBOL DESIGNATIONS INVOLVED	TOTAL NO. PER EQUIP.	BOX	QUAN
E-702	SUPPORT, brush holder: c/o CTT #89405 bushings, #89406 washers and #89407 keys; bakelite disk w/brass back plate; round three pear shaped holes and three body holes in bakelite disk; approx 1-7/8" OD x 5/8" ID x 11/16" lg o/a; mts by ID; bushings and washers retained on three posts by keys	Supports E-701		N17-T-350002-867	CTT	88879	88879	E-702	10	0	0
E-703	WASHER, flat: fibre, round 1-15/16" OD x 13/16" ID x 0.010" thk o/a	Insulation between E-701 and E-702		N17-T-350005-950	CTT	94707	94707	E-703	10	0	0
E-704	HOLDER, brush: for commutator ring; brass holder carbon brush, aluminum locating stud; two curved plates w/brush and locating stud riveted to one end spacer press fitted near other end, four holes in line in plates; approx 1-1/16" lg x 1/2" wd x 15/16" h o/a; mts by ID of spacer	Contacts S-700 to supply current to motor starter windings		N17-T-350002-394 1730-040225013	CTT	82848	82848	E-704	30	1	27
E-705	INSULATOR, plate: bakelite; PS grade; rectangular shape; approx 5-1/4" lg x 15/16" wd x 1/8" h o/a; four mtg holes approx 5/32" diam	Covers connection on TB-700		*1	CTT	126983	126983	E-705	7	0	0
E-706	Same as E-622	Terminates W-702 or W-703									
E-707	INSULATOR, strip: rectangular flat shape; grey fiber; approx 5-5/16" lg o/a; approx 5/16" wd x 1/32" thk o/a; four 7/32" holes	Insulator between TB-700 and A-703		*3	CTT	124468	124468	E-707	7	0	0
E-708	Same as E-626	Insulator between R-751 and R-700									
E-709	Same as E-626	Insulator between R-700 and A-709									
E-710	Same as E-626	Insulator between H-754 and R-701									
E-711	Same as E-626	Insulator between R-701 and R-709									
E-712	Same as E-622	Terminates W-700									
E-800	WASHER, flat: grey fiber; sq, 1" sq x 1/64" thk, 7/16" ID; rounded corners	Insulates between L-801 and O-1172		N17-T-350016-368	CTT	41964	41964	E-800	4	0	0

E-801	ARMATURE: iron, nickel pl; nickel silver disk welded to ctr; one end tapered to rounded point, other end straight w/ angular cutout and formed ear to one side; approx 1-7/8" lg x 45/64" wd x 17/64" h o/a; mts by #4-40 tapped hole near ctr; rectangular hole w/rounded end, slot across wd end csk hole at pointed end, #2-56 tapped hole in rear	Operates O-1174		N17-T-350016-735	CTT	129246	129246	E-801	4	0
E-802	INSULATOR, plate: rectangular shape w/rounded corners; grey fiber; approx 1-21/32" lg o/a; approx 13/16" wd, 1/32" thk, two 3/32" mtg holes	Insulator between S-800 and A-837		3G320-505 N17-T-350016-278	CTT	129239	129239	E-802,E-803	8	0
E-803	Same as E-802	Insulator between S-801 and A-839								
E-804	PLATE, armature: brass plate soldered to armature plate; oval shaped; approx 1-9/16" lg x 1/2" wide x 7/32" thk o/a; two mounting holes tapped for #4-40 screws located 9/16" and 9/16" from end and 7/64" on each side of armature axis	Operates O-1179		N17-T-350003-323	CTT	93463	93463	E-804,E-1326	4	0
E-1300	Same as E-214	Electrical contact between distributor-transmitter and base								
E-1301	Same as E-216	Insulation between E-1300 and E-1302								
E-1302	Same as E-215	Electrical contact between distributor-transmitter and base								
E-1303	INSULATOR, plate: rectangular shape; natural color bakelite, FS grade; approx 1-13/16" lg o/a; approx 1-1/8" wd x 1/64" thk o/a; two 5/32" diam mtg holes	Insulation between A-1300 and A-1301		*3	CTT	129316	129316	E-1303	9	0
E-1304	Same as E-304	Insulation between A-1304 and E-1305								
E-1305	SPRING, contact: approx 1-11/16" lg x 5/16" wd x 5/32" thk; mts by two body holes; riveted contact point	Release bar short spring contact		N17-T-350002-570 1730-04086904	CTT	84705	84705	E-1305	9	0
E-1306	Same as E-306	Contactor for E-1305								
				*1 Low Failure item - if required requisition from ESO referencing NavShips 900,180A *3 Shop Manufacture						

TABLE 8-4. COMBINED PARTS AND SPARE PARTS LIST

PARTS

SYMBOL DESIG.	NAME OF PART AND DESCRIPTION	FUNCTION	JAN OR NAVY TYPE DESIG.	SIGNAL CORPS STANDARD NAVY, AIR FORCE STOCK NO.	MANUFACTURERS CODE	MANUFACTURERS DESIG.	TELETYPE PART NO.	ALL SYMBOL DESIGNATIONS INVOLVED	TOTAL NO. PER EQUIP.	EQUIPMENT SPARE PARTS BOX	EQUIPMENT SPARE PARTS QUAN
E-1307	SPRING, contact: approx 2-1/8" lg x 5/16" wd x 3/16" thk o/a; mts by two body holes; extensions riveted to spring, two tungsten contacts	Long contact spring for release bar		N17-T-350002-569 1730-040869016	CTT	84666	84666	E-1307	9	0	0
E-1308	SPRING, contact: steel; approx 1-11/16" lg x 3/8" wd x 5/32" thk o/a; mts by two body holes; tungsten point	Closed contact spring for release bar		N17-T-350006-875 1730-040869012	CTT	41720	41720	E-1308	9	0	0
E-1309	INSULATOR, bushing: bakelite; male and female; 3/16" OD x 1/8" ID x 17/32" lg o/a	Insulates H-1357		N17-T-350005-926 1730-081552145	CTT	83954	83954	E-1309	18	0	0
E-1310	Same as E-622	Connects L-1300 and L-1301 to cable									
E-1311	INSULATOR, strip: rectangular shape; bakelite, PS grade; approx 2-3/8" lg; approx 7/16" wd x 3/32" thk; four body holes	Insulates A-1311 from O-1354 and O-1356		N17-T-350005-854	CTT	2504	2504	E-1311, E-1312 E-1314, E-1316	36	0	0
E-1312	Same as E-1311	Insulates O-1354 and O-1356 from E-1313 and E-1317									
E-1313	CONTACT: nickel silver; approx 1-19/32" lg x 1-9/16" wd x 3/16" thk o/a; mts by two body holes; contact points riveted to 6" lg arms, elongated hole in short arm	Long contacts for signal impulse		N17-T-350006-657	CTT	97535	97535	E-1313	9	0	0
E-1314	Same as E-1311	Insulates E-1313 and E-1317 from E-1315 and E-1318									
E-1315	CONTACT: nickel silver; approx 2-1/16" lg x 1-9/16" wd x 1/8" thk o/a; mts by two body holes; contact points and bakelite insulators swaged on 6" lg arms, elongated hole in short arm	Short contacts for signal impulses		N17-T-350006-655 1730-040869040	CTT	97533	97533	E-1315	9	0	0
E-1316	Same as E-1311	Insulates O-1355 and O-1357 from A-1310									
E-1317	CONTACT: nickel silver; approx 1-9/16" lg x 7/8" wd x 3/16" thk o/a; mts by two body holes; contact point riveted to one arm, elongated hole in other arm	Short contact for start-stop impulse		N17-T-350006-658	CTT	97536	97536	E-1317	9	0	0

E-1318	CONTACT: nickel silver; approx 2-1/16" lg x 7/8" wd x 1/8" thk o/a; mts by two body holes; contact point and bakelite insulator swaged on lg arm, elongated hole in short arm	Long contact for start-stop impulses	N17-T-350006-656 1730-040869083	CTT	97534	97534	E-1318	9	0	0
E-1319	INSULATOR, bushing: bakelite; male; approx 1/2" lg x 9/64" ID x 7/32" OD o/a; ssk both ends	Insulates H-1400	N17-T-350004-688	CTT	112499	112499	E-1319	36	0	0
E-1320	Same as E-622	Connects filter circuit to ground								
E-1321	Same as E-304	Insulates E-1322 from A-1305								
E-1322	Same as E-306	Contact for E-1308								
E-1323	Same as E-304	Insulates E-1308 from E-1307								
E-1324	Same as E-304	Insulates E-1306 from E-1325								
E-1325	Same as E-306	Contact for E-1307								
E-1326	Same as E-804	Operates O-1341 by L-1300 and L-1301								
E-1500	SPRING: flat type; slip connections, right shorting; 0.025 nickel silver; approx 1-11/32" lg x 1-1/32" wd x 7/64" h o/a; mts by notch and narrow end; elongated slot in bent end, elongated hole in ear on mtg end	Left connector for MT-1372/FGC-38, MT-1373/FGC-38X, MT-1374/FGC-39	4T129350 N17-T-350016-523 1730-043951618	CTT	129350	129350	E-1500,E-1702	5	0	0
E-1501	SPRING: flat type; slip connection, left shorting; 0.025 nickel silver; approx 1-11/32" lg x 1-1/32" wd x 7/64" h o/a; mts by notch and narrow end; elongated slot in formed end, elongated hole in ear on mtg end	Right connector for MT-1372/FGC-38, MT-1373/FGC-38X, MT-1374/FGC-39	N17-T-350016-579	CTT	129351	129351	E-1501,E-1700	5	0	0
E-1502	INSULATOR, plate: irregular shape; grade A phenolic fiber; approx 2-7/32" lg x 1-1/32" wd x 0.051 thk	Insulates E-1500 from E-1501	N17-T-350016-758	CAU	D-44317	113183	E-1502,E-1504 E-1701,E-1704	15	0	0
E-1503	SPRING: flat type; slip connecting, RH; 0.025 nickel silver; approx 1-17/32" lg x 1-1/32" wd x 3/16" h o/a; mts by body; ear and tapered finger formed slightly, elongated hole in ear	Right slip connector for MT-1372/FGC-38, MT-1373/FGC-38X, MT-1373/FGC-39	4T129337 N17-T-350016-339 1730-143951651	CAU	D-109159	129337	E-1503,E-1703	10	0	0
E-1504	Same as E-1502	Insulates E-1503 from E-1505								

TABLE 8-4. COMBINED PARTS AND SPARE PARTS LIST

PARTS									EQUIPMENT SPARE PARTS	
SYMBOL DESIG.	NAME OF PART AND DESCRIPTION	FUNCTION	JAN OR NAVY TYPE DESIG.	SIGNAL CORPS STANDARD NAVY, AIR FORCE STOCK NO.	MANUFACTURERS CODE	MANUFACTURERS DESIG.	TELETYPE PART NO.	ALL SYMBOL DESIGNATIONS INVOLVED	TOTAL NO. PER EQUIP.	BOX	QUAN
E-1505	SPRING: flat type; slip connection LH; 0.025 nickel silver; approx 1-17/32" lg x 1-1/32" wd x 3/16" h o/a; mts by body; ear and tapered finger formed slightly, elongated hole in ear	Left slip connector spring for MT-1372/FGC-38, MT-1373/FGC-38X, MT-1374/FGC-39		4T129336 N17-T-350016-340 1730-043951648	CAU	10930	129336	E-1505,E-1705	10	0	0
E-1506	BLOCK, guide: natural color bakelite; rectangular, five slots 23/64" deep one side; approx 1-7/8" lg x 1/2" wd x 17/32" h o/a; mts by 5/32" diam ctb hole near ea end; one corner diagonal cut off 1/4" d x 1/8" wd	Supports slip connector assembly		N17-T-350016-366 3320-082351925	CTT	129334	129334	E-1506,E-1706	3	0	0
E-1507	INSULATOR, strip: flat rectangular; natural color bakelite; approx 1-55/64" lg o/a; approx 7/16" wd x 1/16" thk, two mtg holes 5/32" diam ea end	Insulates E-1506 from A-1500		*1	CTT	129335	129335	E-1507,E-1707	3	0	0
E-1508	WASHER, flat: bakelite, PS grade; round, approx 0.196"ID x 3/4" diam x 0.062" thk	Insulates R-1500 from A-1523		N17-T-350005-809	CTT	83355	83355	E-1508,E-1509	27	1	6
E-1509	Same as E-1508	Insulates R-1500 from H-1690									
E-1510	WASHER, flat: phenolic fiber; round, 9/64" ID, 11/32" OD, 3/64" thk	Insulates R-1501 from H-1694		N17-T-350009-793	CTT	90096	90096	E-1510,E-1511	18	1	12
E-1511	Same as E-1510	Insulates R-1501 from A-1524									
E-1512	Same as E-622	Terminal for W-1500									
E-1700	Same as E-1501	Right slip connectors spring for MT-1369/FGC-38, MT-1370/FGC-38X, MT-1371/FGC-39									
E-1701	Same as E-1502	Insulator between E-1700 and E-1702									
E-1702	Same as E-1500	Left slip connectors spring for MT-1369/FGC-38, MT-1370/FGC-38X, MT-1371/FGC-39									
E-1703	Same as E-1503	Right slip connectors spring for MT-1369/FGC-38, MT-1370/FGC-38X, MT-1371/FGC-39									

E-1704	Same as E-1502	Insulators between E-1703 and E-1705								
E-1705	Same as E-1505	Left slip connectors spring for MT-1369/FGC-38, MT-1370/FGC-38X, MT-1371/FGC-39								
E-1706	Same as E-1506	Supports slip connections on message transmitter bases								
E-1707	Same as E-1507	Insulators between E-1706 and A-1700								
E-1708	Same as E-622	Terminal for W-1700								
E-1800	PLUG, upper solenoid: iron, cad pl; approx 31/32" lg x 1-1/8" diam o/a; mts by ID and three tapped holes; hub 3/16" lg x 1/2" diam	Upper core for L-1800	N17-T-350016-334	CYG	58358	129715	E-1800	3	0	0
E-1801	ARMATURE ASSEMBLY: approx 4" lg x 1-1/2" wd x 1" thk o/a; mts by end cars; solenoid plug welded to armature	Mtg plate for E-1800, E-1801 and L-1800	N17-T-350016-326	CYG	58593	129720	E-1801	3	0	0
E-1900	CONTACT ASSEMBLY, tape out: c/o #82927 cont spring and #81721 cont spring; approx 2-3/16" lg x 3/4" wd x 7/8" h o/a; one open ckt pile up type cont assembly	Closes circuit to tape-out alarm lamp	4T128837 N17-T-350016-277	CTT	128837	128837	E-1900	4	0	0
E-1901	Same as E-304	Insulation for E-103, E-104, O-108, E-105 and E-106								
E-1902	CLAMP, cable: ethyl cellulose plastic; one bolt employed; approx 13/16" lg x 1/2" wd x 3/8" h o/a; accommodates 1/4" cable	Cable clamp for W-101	N17-C-780913-901	CPC	724-4	121244 [1]	E-1902	4	0	0
E-1903	Same as E-305	Long contact spring for receiver tape container assembly								
E-1904	Same as E-306	Contact for E-1903								
E-1905	Same as E-307	Short contact spring for receiver tape container tape-out assembly								
E-1906	Same as E-306	Contact for E-1905								
E-1907	INSULATOR, bushing: natural color bakelite; male or female bushing; approx 19/32" lg x 3/16" OD x 1/8" ID	Insulator for H-1915	N17-T-350005-922	CTT	82559	82559	E-1907	8	0	0

*1 Low Failure item-if required requisition from ESO referencing NavShips 900,180A

TABLE 8-4. COMBINED PARTS AND SPARE PARTS LIST

PARTS										EQUIPMENT SPARE PARTS	
SYMBOL DESIG.	NAME OF PART AND DESCRIPTION	FUNCTION	JAN OR NAVY TYPE DESIG.	SIGNAL CORPS STANDARD NAVY, AIR FORCE STOCK NO.	MANUFACTURERS CODE	MANUFACTURERS DESIG.	TELETYPE PART NO.	ALL SYMBOL DESIGNATIONS INVOLVED	TOTAL NO. PER EQUIP.	BOX	QUAN
E-1998	STRIP, jack mounting: hard rubber; rectangular block; 9-1/8" lg x 1-3/8" wd x 5/8" thk o/a; two holes on 5-1/2" mtg/c through side; 12 csk holes and 12 #6-32 holes in two rows	Mounts reperforator and signal line jacks		4T128550 N17-T-350016-647	CTT	128550	128550	E-1998	2	0	0
E-1999	MOUNTING, jack: hard rubber block, brass mtg brackets; approx 8-3/32" lg x 7/8" wd x 1-1/2" h o/a; mts by end brackets; 12 equidistant body holes w/tapped hole above ea	Mounts receiving cable jacks		4Z6035 N17-T-350016-640	CW	243-A	128645	E-1999	1	0	0
E-2001	CLAMP: cable clamp; steel, cad pl; two screws employed; approx 1-15/16" lg x 1-1/4" h x 1-3/8" wd o/a; accommodates 9/16" diam cable; mts by 1/2" pipe thd and bond nut, one end, 90° bend	Clamp for AC power input cable		G17-C-29120 1730-485480000	CTT	94660	94660	E-2001	1	0	0
E-2002	CONNECTOR, cord: shake proof type bond nut w/clamp screws; cast iron base w/steel clamp arm, nickel pl; round, straight type; approx 1" lg x 1-1/4" across flats; mts by 1/2" pipe thd	Clamp for AC cable to TB-2001		N17-T-350004-230	APL	7286	103092	E-2002	1	0	0
E-2003	INSULATOR, plate: rectangular shape; bakelite, PS grade; approx 8" lg x 1-3/8" wd x 1/16" thk o/a; three 7/64" csk to 11/64" mtg holes	Insulates TB-2002 from mounting		*3	CTT	128747	128747	E-2003	1	0	0
E-2099	CONNECTION ASSEMBLY, slip: replacement parts c/o two Teletype #77826 screws, 12 Auto Elec #D-10959 right slip connection springs, 12 #D-10960 left slip connection springs, 12 #D-44317 insulators, one #D-44409 insulator strip and one #D-31993 nut plate; bakelite block and insulators, nickel silver springs; 24 point assembly; approx 4-5/16" lg x 1-9/16" wd x 1-5/16" h o/a; mts by two ctr body holes on 15/16" mtg/c	Slip connection blocks for control panels		N17-C-73333-3739	CAU	D-42143-A	129095	E-2099	6	0	0
F-109	FUSE, cartridge: 0.5 amp, 250 v; one time, glass body, ferrule term; indicating; approx 1-1/4" lg x 1/4" diam o/a	Protects control panel SB-358/FGC		N17-F-16302-60	CFA	AGC-1/2	126296	F-109,F-209	14	1	4

| | | |

TABLE 8-4. COMBINED PARTS AND SPARE PARTS LIST

PARTS									EQUIPMENT SPARE PARTS	
SYMBOL DESIG.	NAME OF PART AND DESCRIPTION	FUNCTION	JAN OR NAVY TYPE DESIG.	SIGNAL CORPS STANDARD NAVY, AIR FORCE STOCK NO.	MANUFACTURERS CODE	MANUFACTURERS DESIG.	TELETYPE PART NO.	ALL SYMBOL DESIGNATIONS INVOLVED	TOTAL NO. PER EQUIP.	BOX	QUAN
F-503	FUSE, cartridge: 0.250 amps; 115 v AC, 60 cyc; one time; glass body; ferrule terms; non-indicating; approx 1-1/4" lg x 1/4" diam; mts by terms ea end	Protects positive voltage output of PP-987/U		N17-F-16302-40 8800-356107	CFA	.250 A AGC	118510	F-503	2	1	2
F-504	FUSE, cartridge; 2 amps, opens in 1-hr at 135% load; one time; glass body; ferrule terms; non-indicating; 1-1/4" lg x 1/4" diam o/a; NEG term	Protects negative unfiltered output of PP-987/U		G17-F-16302-100	CFA	AGC2	120166	F-504,F-505	4	1	4
F-505	Same as F-504	Protects negative filtered voltage output of PP-987/U									
F-1901	Same as F-304	Protects circuit 1 reperforator									
F-1902	Same as F-304	Protects circuit 2 reperforator									
F-1903	Same as F-304	Protects circuit 3 reperforator									
F-1904	Same as F-304	Protects circuit 4 reperforator									
F-1905	Same as F-304	Protects circuit 5 reperforator									
F-1906	Same as F-304	Protects circuit 6 reperforator									
F-1907	Same as F-304	Protects auxiliary outlets									
F-1908	FUSE: 1 amp; 125 v; one time; NEC std; instantaneous action; non-indicating type; approx 1-5/32" diam x 1-1/4" lg o/a	Protects open line alarm lamps		3Z2601.33 N17-T-350016-285	CTT	80905	80905	F-1908,F-1916	2	1	2
F-1909	Same as F-305	Protects upper left governed motor reperforator									
F-1910	Same as F-305	Protects upper right governed motor reperforator									
F-1911	Same as F-305	Protects middle left governed motor reperforator									
F-1912	Same as F-305	Protects middle right governed motor reperforator									

F-1913	Same as F-305	Protects lower left governed motor reperforator							0	0	
F-1914	Same as F-305	Protects lower right governed motor reperforator							0	0	
F-1915	Same as F-304	Protects auxiliary receptacle on AN/FGC-38X							1	6	
F-1916	Same as F-1908	Protects open line alarm lamps on AN/FGC-38X									
F-2001	Same as F-304	Protects upper message base synchronous motor									
F-2002	Same as F-304	Protects lower message base synchronous motor									
F-2003	Same as F-304	Protects number base synchronous motor									
F-2004	Same as F-305	Protects upper message base governed motor									
F-2005	Same as F-305	Protects lower message base governed motor									
F-2006	Same as F-305	Protects number base governed motor									
H-100	SCREW, thumb: knurled thumb head; steel, nickel pl; #10-32 thd; 11/16" lg; 1/4" lg thd; flat point; head 3/4" diam x 1/4" thk; shoulder 3/8" OD x 1/4" thk	Holds control panel to support frame	6L17110-4.8K N17-T-350016-276	CTT	128664	128664	H-100	4	0	0	
H-301	SCREW, machine: slot drive Fil H; steel, nickel pl; #6-40 approx 7/16" lg o/a; 5/16" lg thd portion; head 7/32" diam x 1/8" thk	Secures A-302 and 0-301 to A-301	4T1160 N17-T-350012-639 1730-48114800	CTT	1160	1160	H-301,H-457 H-743,H-750 H-1078,H-1371 H-1565	77	1	6	
H-302	WASHER, lock: steel; round, approx 1/4" OD x 5/32" ID x 1/32" thk o/a; split-ring type	Secures A-302 and 0-301 to A-301	N17-T-350005-561 1730-65632000	CTT	2191	2191	H-302,H-306 H-311,H-313 H-321,H-405 H-413,H-420 H-425,H-432 H-441,H-454 H-460,H-462 H-464,H-470 H-476,H-478 H-482,H-603 H-608,H-618 H-628,H-631 H-634,H-642 H-643,H-649 H-652,H-655 H-657,H-666 H-671,H-678	1799	1	360	

TABLE 8-4. COMBINED PARTS AND SPARE PARTS LIST

PARTS

SYMBOL DESIG.	NAME OF PART AND DESCRIPTION	FUNCTION	JAN OR NAVY TYPE DESIG.	SIGNAL CORPS STANDARD NAVY, AIR FORCE STOCK NO.	MANUFACTURERS CODE	MANUFACTURERS DESIG.	TELETYPE PART NO.	ALL SYMBOL DESIGNATIONS INVOLVED	TOTAL NO. PER EQUIP.	EQUIPMENT SPARE PARTS BOX	EQUIPMENT SPARE PARTS QUAN
								H-681,H-688 H-692,H-712 H-724,H-734 H-740,H-744 H-749,H-752 H-756,H-757 H-759,H-762 H-808,H-812 H-819,H-823 H-825,H-827 H-829,H-832 H-835,H-847 H-852,H-855 H-857,H-860 H-862,H-870 H-880,H-886 H-894,H-900 H-902,H-904 H-907,H-909 H-913,H-924 H-931,H-946 H-949,H-966 H-976,H-983 H-986,H-996 H-1002,H-1006 H-1009,H-1011 H-1026,H-1028 H-1039,H-1044 H-1046,H-1053 H-1057,H-1060 H-1073,H-1074 H-1080,H-1085 H-1091,H-1099 H-1102,H-1104 H-1111,H-1113 H-1119,H-1143 H-1144,H-1150 H-1152,H-1156 H-1172,H-1178 H-1181,H-1204 H-1209,H-1215 H-1219,H-1221 H-1225,H-1232 H-1233,H-1236 H-1245,H-1248 H-1252,H-1258 H-1260,H-1284 H-1322,H-1324 H-1327,H-1335 H-1338,H-1349 H-1368,H-1377 H-1380,H-1381 H-1384,H-1387 H-1396,H-1407 H-1444,H-1467 H-1502,H-1504 H-1509,H-1511 H-1523,H-1525			

H-1528,H-1531										
H-1532,H-1540										
H-1542,H-1546										
H-1554,H-1560										
H-1566,H-1586										
H-1597,H-1598										
H-1611,H-1614										
H-1617,H-1622										
H-1630,H-1633										
H-1643,H-1647										
H-1650,H-1652										
H-1654,H-1656										
H-1669,H-1675										
H-1681,H-1687										
H-1696,H-1702										
H-1705,H-1709										
H-1711,H-1718										
H-1723,H-1726										
H-1728,H-1732										
H-1738,H-1744										
H-1746,H-1750										
H-1753,H-1755										
H-1763,H-1766										
H-1771,H-1774										
H-1778,H-1786										
H-1790,H-1902										
H-1905,H-1907										
H-1910,H-1912										
H-1914										
H-303,H-310										
H-314,H-322										
H-426,H-427										
H-439,H-471										
H-677,H-691										
H-725,H-735										
H-828,H-830										
H-861,H-923										
H-965,H-1001										
H-1010,H-1038										
H-1076,H-1079										
H-1086,H-1092										
H-1098,H-1101										
H-1114,H-1123										
H-1145,H-1175										
H-1187,H-1214										
H-1249,H-1336										
H-1344,H-1348										
H-1367,H-1395										
H-1412,H-1414										
H-1424,H-1459										
H-1466,H-1501										
H-1535,H-1653										
H-1701,H-1779										
H-303	NUT, hexagon: steel, nickel pl; #6-40; 3/32" thk o/a; approx 1/4" across flats	Secures A-302 and 0-301 to A-301	N17-T-350012-485 1730-481354000	CTT	3598	3598	350	1	90	
H-304	SCREW, machine: slot drive; FH; iron, nickel pl; #4-36 thd; approx 5/16" lg o/a; threaded portion 1/4" lg; head 7/32" diam x 1/16" thk	Secures A-304 to A-303	N17-T-350013-108	CTT	1207	1207	304	2	0	0
H-305	SCREW, machine: slot drive; Fil H; steel, nickel pl; #6-40; approx 3/4" lg o/a; 5/8" lg threaded portion; head 1/8" thk x 7/32" diam	Secures A-305 to A-304	N17-T-350013-165 1730-481172000	CTT	1179	1179	305,H-711	11	1	6

TABLE 8-4. COMBINED PARTS AND SPARE PARTS LIST

PARTS									EQUIPMENT SPARE PARTS	
SYMBOL DESIG.	NAME OF PART AND DESCRIPTION	FUNCTION	JAN OR NAVY TYPE DESIG.	SIGNAL CORPS STANDARD NAVY, AIR FORCE STOCK NO.	MANUFACTURERS CODE	MANUFACTURERS DESIG.	TELETYPE PART NO.	ALL SYMBOL DESIGNATIONS INVOLVED	TOTAL NO. PER EQUIP.	BOX	QUAN
H-306	Same as H-302	Secures A-305 to A-304									
H-307	WASHER, flat: steel, nickel pl; round, approx 1/8" ID x 1/4" OD x 1/32" thk o/a	Secures A-305 to A-304		N17-T-350006-300 1730-481822000	CTT	8330	8330	H-307,H-459 H-601,H-604 H-670,H-821 H-891,H-895 H-1052,H-1613 H-1623,H-1629 H-1644,H-1767 H-1770,H-1787 H-1791	121	1	75
H-308	WASHER, flat: steel, nickel pl; round, 3/16" ID, 15/32" OD, 0.042" thk	Secures A-303 to A-301		N17-T-350012-647	CTT	7037	7037	H-308,H-842	29	0	0
H-309	SCREW, shoulder: slot drive; cheese H; screw steel, zinc and chromate; #6-40 thd; approx 1-1/4" lg o/a; thd sect 5/32" lg; approx 5/16" diam x 7/64" lg x 1/64" chamfer head; 3/16" diam x 53/64" lg shoulder	Secures A-303 and A-304 to A-301		N17-T-350016-407	CTT	110787	110787	H-309	1	0	0
H-310	Same as H-303	Secures A-303 and A-304 to A-301									
H-311	Same as H-302	Secures A-303 and A-304 to A-301									
H-312	SCREW, machine: slot drive; Fil H; steel, nickel pl; #6-40; approx 3/8" lg o/a; 1/4" threaded portion; 1/8" thk x 3/16" diam head	Secures A-306 to A-301		N17-T-350001-140	CTT	125168	125168	H-312	2	0	0
H-313	Same as H-302	Secures A-306 to A-301									
H-314	Same as H-303	Secures A-306 to A-301									
H-315	SCREW, machine: slot drive; Fil H; steel, nickel pl; #4-40; approx 21/32" lg o/a; 9/16" lg threaded portion; head 3/32" thk x 3/16" diam	Permits adjustment of O-303		N17-T-350012-642 1730-481182000	CTT	1206	1206	H-315,H-1130	8	0	0
H-316	NUT, hexagon: steel, nickel pl; #4-40; 3/32" thk o/a; approx 3/16" across flats	Permits adjustment of O-303		N17-T-350012-486 1730-481356000	CTT	3599	3599	H-316,H-318 H-1013,H-1063 H-1097,H-1161 H-1163,H-1326 H-1340,H-1353 H-1425,H-1628 H-1784	70	1	45

H-317	SCREW, shoulder: slot drive; FH; steel, nickel pl; #4-40 thd; approx 7/16" lg o/a; approx 9/32" lg threaded portion incl slot; head approx 3/32" thk x 1/4" diam; shoulder approx 1/16" lg x 5/32" diam	Secures 0-303 to A-306		N17-T-350005-532 1730-481168000	CTT	1174	1174	H-317	1	0	0
H-318	Same as H-316	Secures 0-303 to A-306									
H-319	SCREW, machine: slot drive; Fil H; steel, nickel pl; #6-40; approx 3/8" lg o/a; 5/16" lg threaded portion; head 1/16" thk x 1/4" diam	Secures tape container to reperforator		N17-T-350004-640	CTT	111017	111017	H-319,H-1615 H-1621,H-1631 H-1642,H-1752 H-1765,H-1772 H-1785,H-1789	49	1	20
H-320	WASHER, flat: steel, nickel pl; round, approx 5/16" OD x 5/32" ID x 0.028" thk o/a	Secures tape container to reperforator		N17-T-350005-776 1730-481616000	CTT	7002	7002	H-320,H-607 H-617,H-629 H-630,H-653 H-683,H-685 H-689,H-739 H-763,H-809 H-831,H-834 H-846,H-853 H-858,H-901 H-914,H-932 H-949,H-975 H-982,H-1056 H-1081,H-1084 H-1120,H-1157 H-1210,H-1226 H-1238,H-1251 H-1323,H-1334 H-1342,H-1350 H-1378,H-1383 H-1453,H-1468 H-1506,H-1507 H-1518,H-1555 H-1561,H-1648 H-1668,H-1676 H-1694,H-1699 H-1706,H-1707 H-1751,H-1754 H-1799,H-1903	517	1	123
H-321	Same as H-302	Secures tape container to reperforator									
H-322	Same as H-303	Secures tape container to reperforator									
H-323	SCREW, machine: slot drive; Fil H; steel, nickel pl; #4-40 thd; approx 11/32" lg; threaded portion 9/32" lg; head 11/64" thk x 1/16" lg	Secures tape container to reperfor-		N17-T-350003-899	CTT	99851	99851	H-323	2	0	0
H-324	SCREW, machine: slot drive; Fil H; steel, nickel pl; #4-40 thd; approx 25/32" lg o/a; 7/16" lg threaded portion	Secures E-301 to A-301		N17-T-350003-704	CTT	98832	98832	H-324	2	0	0

TABLE 8-4. COMBINED PARTS AND SPARE PARTS LIST

PARTS										EQUIPMENT SPARE PARTS	
SYMBOL DESIG.	NAME OF PART AND DESCRIPTION	FUNCTION	JAN OR NAVY TYPE DESIG.	SIGNAL CORPS STANDARD NAVY, AIR FORCE STOCK NO.	MANUFACTURERS CODE	MANUFACTURERS DESIG.	TELETYPE PART NO.	ALL SYMBOL DESIGNATIONS INVOLVED	TOTAL NO. PER EQUIP.	BOX	QUAN
H-325	WASHER, lock: steel; round, approx 7/32" OD x 1/8" ID x 1/32" thk o/a; split-ring type	Secures E-301 to A-301		N17-T-350005-754 1730-481396000	CTT	3640	3640	H-325,H-648 H-674,H-702 H-737,H-814 H-999,H-1014 H-1021,H-1023 H-1064,H-1067 H-1096,H-1124 H-1127,H-1131 H-1135,H-1146 H-1194,H-1229 H-1310,H-1313 H-1319,H-1325 H-1354,H-1360 H-1391,H-1410 H-1418,H-1421 H-1424,H-1429 H-1431,H-1438 H-1441,H-1447 H-1450,H-1456 H-1463,H-1470 H-1569,H-1571 H-1627,H-1783 H-1916	440	1	194
H-340	POST: printing unit locating; steel, nickel pl; approx 19/32" lg x 5/16" OD o/a; one end thd 5/32" lg w/#10-32 thd; one radial hole at one end	Shock mount for reperforator		N17-T-350006-155	CTT	7338	7338	H-340,H-1930	7	0	0
H-341	GROMMET, cup: steel, cad or nickel pl; round, approx 5/16" ID, 1/2" OD, 3/32" d o/a; fits 5/16" diam hole	Spacer for H-342		N17-T-350012-931	LFK	GOS-5-93	114765	H-341,H-1932	14	0	0
H-342	FASTENER, snap: cabinet; steel, nickel pl; approx 21/32" lg x 9/16" diam o/a; drive mtg; drive slot in OH	Door fastener		1142-S-26524-3765	LFK	5-0-120A	129395	H-342,H-1933	20	0	0
H-343	NUT, lock: speed nut type; steel, zinc chromate pl; #8-32 thd; approx 3/16" thk o/a; approx 3/4" lg x 7/16" wd o/a; clip locking type	Secures wireway to cabinet wall		6L3810-32-7 N43-N-9699-560	TIN	C814-832-1	115594	H-343,H-1934	21	0	0
H-344	NUT, lock: speed nut type; steel, zinc chromate pl; 1/4"-20 thd; 1/4" thk o/a; clip locking type	Secures side panel on shelf to cabinet		6L3824-20-8 N43-N-9699-615	TIN	C509-1/4.20-1	115595	H-344,H-1935	20	0	0
H-345	STUD: steel, nickel pl; approx 5/8" lg x 1/4" diam w/3/8" across flats hex head; one end tapped #10-32 thd x 3/8" d	Secures O-320 to shelf plate		4T128394 N17-T-350016-222	CTT	128394	128394	H-345,H-1938	32	0	0

H-346	STUD: steel, nickel pl; approx 5/8" lg x 7/32" diam o/a; one end thd 1/4" lg w/6-32 thd, other end 1/32" drive slot approx	Secures time stamp to shelf plate	4T151542 N17-T-350016-210	CTT	151542	151542	H-346	16	0	0
H-389	STUD: steel, nickel pl; 1-3/32" lg x 3/8" wd across flats o/a; one end threaded 19/32" lg w/#10-32 thd; neck between shoulder and threaded portion, rounded head	Catch for lower door on monitor cabinet	6L31150-17-1 N17-T-350016-721	CTT	116096	116096	H-389	2	0	0
H-390	SCREW, machine: slot drive; flat, Fil H; steel, nickel pl; #10-32; approx 3/8" lg; threaded portion 3/16" lg; head 1/8" lg x 3/8" diam; shoulder 5/64" lg x 7/32" diam; slot between shoulder and body	Secures 0-395 to 0-394	6L7032-6-5451 N17-T-350016-701	CTT	82730	82730	H-390	6	0	0
H-391	HOLDER, cable: steel, cad pl; two clamp jaws and torsion spring on riveted shaft; approx 2" lg x 1-3/4" wd x 1-1/16" h o/a; mts by two holes in formed mtg ears on 1-1/4" mtg/c	Holder for reperforator, time stamp and tape winder cables	225042-186 N42-C-19213-3551	Stanley "Hold-All" Jr J. Pask Associates, Inc.	123969	123969	H-391	9	0	0
H-393	BUTTON, plug: brass or steel, light navy grey finish; for 11/16" diam hole; 7/8" diam x 1/4" h o/a	Plugs hole made for manufacturing purposes	221480.107 N17-T-350016-698	CTT	11964OBR	11964OBR	H-393	1	0	0
H-394	NUT, lock: speed nut type; steel; for 3/16" diam stud; approx 1/8" h o/a, 0.012" thk material; 41/64" lg x 3/8" wd	Secures "Teletype" name plate	6L3650-7 N43-M-81013-1610	TTN	C12005-012 Type 1	117608	H-394	2	0	0
H-395	SCREW, machine: slot drive; RH; iron, nickel pl; #8-32; approx 1-7/8" lg; threaded portion 1-3/4" lg; head 1/8" lg x 1/4" diam	Secures XF-303	6L6832-30.5S N17-T-350016-702	CTT	98732	98732	H-395	5	0	0
H-396	SCREW, machine: slot drive; flat Fil H; steel, nickel pl; #10-32; approx 29/32" lg; threaded portion 1/4" lg; head 1/8" lg x 5/16" diam; shoulder 7/16" lg x 1/4" diam	Secures 0-398 and 0-399 rollers to mounting strips	6L6832-34.6 N17-T-350016-683	CTT	7345	7345	H-396	6	0	0
H-397	SCREW, machine: slot drive; Fil H; steel, nickel pl; 1/4"-20; approx 23/32" lg; threaded portion 5/16" lg; head 3/32" lg x 3/8" diam	Secures roller mounting strip to cabinet	6L4904-12.4S N17-T-350016-689	CTT	116023	116023	H-397	24	0	0
H-398	SCREW, machine: slot drive; flat Fil H; steel, nickel pl; 0.190"-32; approx 1-5/16" lg; threaded portion 1-3/16" lg; head 1/8" lg x 5/16" diam	Secures lower vibration mounts to shelf cross bars	6L7032-21.5AS N17-T-350016-706	CTT	73776	73776	H-398	12	0	0
H-399	SCREW, machine: slot drive; FH: iron, nickel pl; #6-40 thd; approx 3/8" lg; threaded portion 5/16" lg; head 1/16" lg x 5/32" diam	Secures rerun panel	6L6640-6.7S31 N17-T-350016-703	CTT	98725	98725	H-399	4	0	0

TABLE 8-4. COMBINED PARTS AND SPARE PARTS LIST

PARTS										EQUIPMENT SPARE PARTS	
SYMBOL DESIG.	NAME OF PART AND DESCRIPTION	FUNCTION	JAN OR NAVY TYPE DESIG.	SIGNAL CORPS STANDARD NAVY, AIR FORCE STOCK NO.	MANUFACTURERS CODE	MANUFACTURERS DESIG.	TELETYPE PART NO.	ALL SYMBOL DESIGNATIONS INVOLVED	TOTAL NO. PER EQUIP.	BOX	QUAN
H-401	SCREW, machine: slot drive; hex H; steel, nickel pl; #8-32 thd; approx 13/16" lg o/a; thd sect 11/16" lg; head approx 1/8" thk x 1/4" diam	Secures B-401 to A-401		N17-T-350011-298	CTT	99082	99082	H-401	12	0	0
H-402	WASHER, lock: steel; round, approx 11/32" OD x 3/16" ID x 0.047" thk o/a; split-ring type	Secures B-401 to A-401		N17-T-350013-122 1730-481294000	CTT	2669	2669	H-402,H-409 H-415,H-418 H-423,H-436 H-444,H-447 H-450,H-473 H-485,H-639 H-661,H-705 H-709,H-840 H-845,H-874 H-897,H-971 H-1031,H-1093 H-1164,H-1242 H-1255,H-1269 H-1281,H-1305 H-1513,H-1516 H-1520,H-1579 H-1588,H-1592 H-1603,H-1639 H-1713,H-1716 H-1720,H-1735 H-1748,H-2102 H-2105,H-2107	331	1	126
H-403	WASHER, flat: steel, nickel pl; round, approx 7/16" OD x 3/16" ID x 0.050" thk o/a	Secures B-401 to A-401		N17-T-350005-622 1230-481340000	CTT	3438	3438	H-403,H-404 H-408,H-416 H-435,H-445 H-451,H-467 H-474,H-640 H-697,H-801 H-805,H-875 H-928,H-951 H-1186,H-1297 H-1306,H-1505 H-1558,H-1589 H-1640,H-1690 H-1704	184	1	30
H-404	Same as H-403	Secures B-401 to A-401									
H-405	Same as H-302	Secures O-401 to B-401 shaft									
H-406	SCREW, machine: slot drive; flat Fil H; steel; pl; #6-40 thd; approx 9/16" lg o/a; thd portion approx 1/2" lg; 1/16" thk x 7/32" diam head	Secures O-401 to shaft of B-401		N17-T-350014-591 1730-043601407	CTT	151659	151659	H-406,H-412 H-463,H-481	18	0	0

H-407	SCREW, rheostat pointer: slot drive; FH; iron, nickel pl; #10-32 thd; approx 1/2" lg o/a; thd sect approx 13/32" lg; head approx 1/8" thk x 3/8" diam	Secures A-401 to A-402	N17-T-350005-548	CTT	1264	1264	H-407,H-676	26	1	9
H-408	Same as H-403	Secures A-401 to A-402								
H-409	Same as H-402	Secures A-401 to A-402								
H-410	NUT, hexagon: steel, nickel pl; #10-32 thd; approx 3/32" thk o/a; 5/16" across flats	Secures A-401 to A-402	N17-T-350004-694 1730-4807020O	CTT	112626	112626	H-410,H-437 H-440,H-638 H-710,H-802 H-866,H-878 H-961,H-970 H-1185,H-1190 H-1192,H-1207 H-1673	95	1	33
H-411	SCREW, motor plate: slot drive; FH; steel, bright zinc and chromate dip; #6-40 thd; approx 1/2" lg o/a; thd sect approx 7/16" lg; head approx 3/32" thk x 9/32" diam	Secures A-403 to A-402	N17-T-350005-715	CTT	1248	1248	H-411	6	1	3
H-412	Same as H-406	Secures A-405 to A-403								
H-413	Same as H-302	Secures A-405 to A-403								
H-414	SCREW, machine: slot drive; hex H; steel, nickel pl; #10-32 thd; approx 7/16" lg o/a; thd sect approx 5/16" lg; 5/16" across flats	Secures A-408 and A-407 to A-405	6L7032-18.31S N17-T-350016-289	CTT	99712	99712	H-414,H-417 H-443,H-472	27	0	0
H-415	Same as H-402	Secures A-408 and A-407 to A-405								
H-416	Same as H-403	Secures A-407 to A-405								
H-417	Same as H-414	Secures A-408 to A-405								
H-418	Same as H-402	Secures A-408 to A-405								
H-419	SCREW, machine: slot drive; hex H; steel, nickel pl; #6-40 thd; approx 11/32" lg o/a; 1/4" lg threaded portion; head 3/32" thk x 1/4" across flats	Secures A-409 to A-405	N17-T-350002-257	CTT	80444	80444	H-419,H-609 H-632,H-1075 H-1337,H-1376	69	1	36
H-420	Same as H-302	Secures A-409 to A-405								
H-421	SCREW, machine: slot drive; FH; steel, nickel pl; #6-40 thd; approx 7/32" lg o/a; thd sect approx 1/8" lg; head, 3/32" thk x 9/32" diam	Secures A-410 to A-406	6L6640-3.7S N17-T-350016-290	CTT	102214	102214	H-421	6	0	0

TABLE 8-4. COMBINED PARTS AND SPARE PARTS LIST

PARTS										EQUIPMENT SPARE PARTS	
SYMBOL DESIG.	NAME OF PART AND DESCRIPTION	FUNCTION	JAN OR NAVY TYPE DESIG.	SIGNAL CORPS STANDARD NAVY, AIR FORCE STOCK NO.	MANUFACTURERS CODE	MANUFACTURERS DESIG.	TELETYPE PART NO.	ALL SYMBOL DESIGNATIONS INVOLVED	TOTAL NO. PER EQUIP.	BOX	QUAN
H-422	SCREW, machine: slot or wrench drive; hex H; steel; #10-32 thd; approx 11/32" lg; threaded portion 1/4" lg; head 3/32" thk x 5/16" across flats	Secures A-411 to A-406		N17-T-350013-740	CTT	151606	151606	H-422	6	0	0
H-423	Same as H-402	Secures A-411 to A-406									
H-424	PIN: steel, nickel pl; approx 3/16" diam x 1-27/32" lg o/a; drive slot one end; #6-40 thd x 9/32" lg on one end	Directs tape from O-402 to tape reel		4T98237 N17-T-350016-212	CTT	98237	98237	H-424	12	0	0
H-425	Same as H-302	Secures H-424 to A-412 and A-411									
H-426	Same as H-303	Secures H-424 to A-411 and A-412									
H-427	Same as H-303	Secures O-403 to A-419									
H-428	SCREW, machine: pivots bell crank; steel, nickel pl; approx 1/2" diam x 13/16" lg o/a; mts by means of #10-32 thd sect; has 1/4" diam x 3/8" lg shoulder	Secures A-419 to A-405		N17-T-350006-948	CTT	55010	55010	H-428	3	0	0
H-429	POST, spring: spaces spring; steel, nickel pl; approx 5/32" diam x 3/4" lg, #6-40 thd x 3/16" lg at one end; mts by #6-40 thd sect	Secures O-431 to A-403		N17-T-350009-523	CTT	85931	85931	H-429	3	0	0
H-430	POST, spring: steel, nickel pl; slotted one end, groove near slotted end; approx 1/2" lg x 5/32" diam o/a; mts by 3/32" lg shank w/#6-40 thd	Secures O-431 to A-405		N17-T-350009-524	CTT	85935	85935	H-430,H-438	6	0	0
H-431	SCREW, machine: slot drive; Fil H; steel, nickel plated; #6-40 thd; approx 1/4" lg x o/a; 3/16" lg threaded portion; head 1/16" thk x 7/32" diam	Secures A-413 to A-405		N17-T-350014-594 1730-043601417	CTT	151692	151692	H-431,H-475	18	0	0
h-432	Same as H-302	Secures A-413 to A-405									
H-433	SCREW, shoulder: steel, oxidized copper finish; approx 7/16" lg x 3/8" OD o/a; one end has #6-40 x 7/32" lg mtg thd	Secures O-404 to H-434		N17-T-350001-121	CTT	125120	125120	H-433	3	0	0

H-434	STUD, eccentric: steel, nickel pl; approx 1-3/32" lg x 3/8" across flats o/a; #10-32 x 1/4" lg thd; hex shape w/eccentric thd stud and shoulder	Secures 0-404 to A-415		4T126911 N17-T-350016-229	CTT	126911	126911	H-434	3	0	0
H-435	Same as H-403	Secures 0-404 to A-415									
H-436	Same as H-402	Secures 0-404 to A-415									
H-437	Same as H-410	Secures 0-404 to A-415									
H-438	Same as H-430	Secures 0-432 to A-405									
H-439	Same as H-303	Secures 0-402 to A-419									
H-440	SCREW, machine: slot or wrench drive; hex H; steel, nickel pl; #6-40 thd; approx 3/8" lg o/a; 5/16" lg threaded portion; head 1/16" thk x 1/4" across flats	Secures A-401 to A-414		N17-T-350013-754 1730-043601413	CTT	151631	151631	H-440	6	0	0
H-441	Same as H-302	Secures A-401 to A-414									
H-442	WASHER, flat: steel, zinc and chromate dip; round, 3/8" OD x 9/64" ID x 0.032" thk	Secures A-401 to A-414		N17-T-350012-636 1730-044620480	CTT	125015	125015	H-442,H-479 H-1088,H-1105 H-1567	30	1	12
H-443	Same as H-414	Secures A-415 to A-414									
H-444	Same as H-402	Secures A-415 to A-414									
H-445	Same as H-403	Secures A-415 to-A-414									
H-446	SCREW, machine: slot drive; FH; iron, nickel pl; #10-32 thd; approx 7/16" lg; threaded portion 21/64" lg; head 7/64" lg x 3/8" diam	Secures A-409 to A-414		N17-T-350002-116	CTT	78454	78454	H-446	6	0	0
H-447	Same as H-402	Secures A-409 to A-414									
H-448	Same as H-410	Secures A-409 to A-414									
H-449	SCREW, machine: slot or wrench drive; hex H; steel, nickel pl; #10-32 thd; approx 15/32" lg; 3/8" lg threaded portion; head 3/32" thk x 5/16" across flats	Secures H-452 to A-414		N17-T-350014-602 1730-043601675	CTT	151723	151723	H-449,H-706 H-2104	11	0	0
H-450	Same as H-402	Secures H-452 to A-414									
H-451	Same as H-403	Secures H-452 to A-414									

TABLE 8-4. COMBINED PARTS AND SPARE PARTS LIST

PARTS										EQUIPMENT SPARE PARTS	
SYMBOL DESIG.	NAME OF PART AND DESCRIPTION	FUNCTION	JAN OR NAVY TYPE DESIG.	SIGNAL CORPS STANDARD NAVY, AIR FORCE STOCK NO.	MANUFACTURERS CODE	MANUFACTURERS DESIG.	TELETYPE PART NO.	ALL SYMBOL DESIGNATIONS INVOLVED	TOTAL NO. PER EQUIP.	BOX	QUAN
H-452	CLAMP, cable: steel, nickel pl; one bolt employed; approx 1-3/32" lg x 5/8" wd x 7/16" h o/a; holds 3/8" cable	Secures W-401 to A-414		*1	CTT	105866	105866	H-452	3	0	0
H-453	SCREW: slot drive; flat Fil H; steel, nickel pl; #6-40 thd; approx 5/16" o/a; threaded portion; approx 1/4" lg; 1/16" thk x 7/32" diam head	Secures A-416 to A-414		N17-T-350014-590	CTT	151657	151657	H-453,H-1670	9	0	0
H-454	Same as H-302	Secures A-416 to A-414									
H-457	Same as H-301	Secures 0-405 to 0-406									
H-458	Same as H-302	Secures 0-405 to 0-406									
H-459	Same as H-307	Secures H-424 to A-412 and A-411									
H-460	NUT, hexagon: steel, nickel pl; 7/16"-32 thd; 0.125" thk; approx 9/16" across flats	Secures 0-407 to A-415		N17-T-350005-723	CTT	2199	2199	H-460	3	0	0
H-461	SCREW, machine: slot drive; Fil H; steel, nickel pl; #6-40 thd; approx 11/16" lg o/a; 9/16" lg threaded portion; head 1/8" thk x 7/32" diam	Secures 0-408 to 0-409		N17-T-350012-643	CTT	5446	5446	H-461	9	1	12
H-462	Same as H-302	Secures 0-408 to 0-409									
H-463	Same as H-406	Secures 0-409 to 0-406									
H-464	Same as H-302	Secures 0-409 to 0-406									
H-465	NUT, capstan: steel, nickel pl; 9/16"-32 thd; 0.050" thk; approx 1-7/16" OD; six locking slots	Provides slippage between 0-415 and 0-416		6L3409-32-23 N17-T-350016-286	CTT	90480	90480	H-465	3	0	0
H-466	NUT: hex H; steel, nickel pl; 9/16"-32 thd; 7/64" thk; 3/4" across flats	Secures A-417, 0-430, 0-417, 0-410, 0-411, 0-412, 0-413, 0-414, 0-415 and H-465 to 0-416		N17-T-350012-498 1730-483824000	CTT	77140	77140	H-466,H-1538 H-1552,H-1584 H-1590	12	0	0
H-467	Same as H-403	Secures A-409 to A-414									

H-468	WASHER, lock: steel; round, approx 9/16" OD x 5/16" ID x 11/64" wd; split-ring type	Secures O-430, O-417, O-410, O-411, O-412, O-413, O-414, O-415, and H-465 to O-416	N17-T-350013-125 1730-481436000	CTT	4814	4814	H-468,H-920 H-939	17	0	0
H-469	NUT, hexagon: steel, nickel pl; 5/16"-32 thd; 0.092" thk; approx 7/16" across flats	Secures O-430, O-417, O-410, O-411, O-412, O-413, O-414, O-415 and H-465 to O-416	N17-T-350007-462	CTT	70497	70497	H-469,H-992 H-993	17	0	0
H-470	Same as H-302	Secures A-417, O-430, O-417, O-410, O-411, O-412, O-413, O-414, O-415 and H-465 to O-416								
H-471	Same as H-303	Secures O-418, A-417, O-430, O-417, O-410, O-411, O-412, O-413, O-414, O-415 and H-465 to O-416								
H-472	Same as H-414	Secures A-417 to A-406								
H-473	Same as H-402	Secures A-417 to A-406								
H-474	Same as H-403	Secures A-417 to A-406								
H-475	Same as H-431	Secures A-418 to A-406								
H-476	Same as H-302	Secures A-418 to A-406								
H-477	Same as H-431	Secures A-418 to A-406								
H-478	Same as H-302	Secures A-418 to A-406								
H-479	Same as H-442	Secures A-418 to A-406								
H-480	SCREW, machine: slot drive; FH; iron, bright zinc and chromate dip; #10-32 thd; approx 3/8" lg o/a; thd sect; approx 9/32" lg; head approx 3/8" diam	Secures O-419 to O-422	N17-T-350006-849	CTT	35551	35551	H-480	6	0	0
H-481	Same as H-406	Secures O-421 to O-420								
H-482	Same as H-302	Secures O-421 to O-420								
H-483	WASHER: steel, nickel pl; cir, approx 1/2" ID x 1-3/4" OD x 0.125" thk o/a; beveled on OD	Provides slippage between O-419 and O-421	6L58028-45 N17-T-350016-271	CTT	102017	102017	H-483	3	0	0

*1 Low Failure item- if required requisition from ESO referencing NavShips 900,180A

TABLE 8-4. COMBINED PARTS AND SPARE PARTS LIST

PARTS										EQUIPMENT SPARE PARTS	
SYMBOL DESIG.	NAME OF PART AND DESCRIPTION	FUNCTION	JAN OR NAVY TYPE DESIG.	SIGNAL CORPS STANDARD NAVY, AIR FORCE STOCK NO.	MANUFACTURERS CODE	MANUFACTURERS DESIG.	TELETYPE PART NO.	ALL SYMBOL DESIGNATIONS INVOLVED	TOTAL NO. PER EQUIP.	BOX	QUAN
H-484	SCREW, machine: slot or wrench drive; hex H; steel, nickel pl; #10-32 thd; approx 23/32" lg o/a; 5/8" lg threaded portion; head 3/32" thk x 5/16" across flats	Secures 0-426 and 0-427 to 0-422		N17-T-350014-603	CTT	151724	151724	H-484,H-2106	6	0	0
H-485	Same as H-402	Secures 0-426 and 0-427 to 0-422									
H-486	WASHER, flat: steel, nickel pl; round, approx 11/32" OD x 3/16" ID x 1/32" thk o/a	Secures 0-426 and 0-427 to 0-422		N17-T-350006-840 1730-481892000	CTT	34432	34432	H-486,H-1122 H-1129,H-1189 H-1241,H-1254	52	1	24
H-487	WASHER, lock: steel; round, approx 9/16" OD x 3/8" ID x 1/32" thk o/a; split-ring type	Secures 0-419 to 0-421		N17-T-350013-195 1730-482718000	CTT	73175	73175	H-487	3	0	0
H-488	NUT, hexagon: steel,nickel pl; 3/8"-32; approx 1/8" thk o/a; 1/2" across flats	Secures 0-419 to 0-421		N17-T-350001-357	CTT	2539	2539	H-488	3	0	0
H-490	SCREW, machine: slot drive; FH; iron, nickel pl; #10-32 thd; approx 5/8" lg o/a; thd sect; approx 17/32" lg; head, 3/32" thk x 3/8" diam	Secures 0-423 and 0-424 to 0-425		N17-T-350005-184	CTT	125006	125006	H-490	6	0	0
H-491	PLATE, locking: 0.035" phos bronze, nickel pl; "L" shape w/slot approx 7/32" lg x 3/16" wd; approx 1-3/8" lg x 7/16" wd x 3/16" h o/a; elongated mtg hole	Provides support for 0-420		4T123700 N17-T-350016-232	CTT	123700	123700	H-491	3	0	0
H-492	SCREW, shoulder: steel, nickel pl; approx 1/2" lg x 9/32" OD o/a; mts by #6-40 thd x 7/32" lg	Secures H-491 to 0-423, 0-424 and 0-425		6L15006-8.86 N17-T-350016-449	CTT	123699	123699	H-492	3	0	0
H-493	WASHER, spring: steel; round, approx 3/8" OD x 3/16" ID x 1/32" wd o/a; 0.010" thk material	Secures H-491 to 0-423, 0-424 and 0-425		N17-T-350008-110 1730-483088000	CTT	74283	74283	H-493	3	0	0
H-494	WASHER, flat: steel, nickel pl; approx 3/16" ID x 3/8" OD x 0.032" thk o/a	Secures H-491 to 0-423, 0-424 and 0-425		N17-T-350006-870	CTT	41663	41663	H-494	3	0	0
H-495	SCREW, machine: slot drive; Fil H; iron, nickel pl; #10-32 thd; approx 19/32" lg; threaded portion 7/16" lg; head 5/32" lg x 5/16" diam	Secures 0-432 to A-406		6L7032-9.4C N17-T-350016-571	CTT	1286	1286	H-495	6	0	0
H-496	WASHER, clamp: steel, nickel pl; "U" shaped; 1/2" lg x 5/8" wd x 5/32" h o/a; 13/64" axial mtg hole	Secures 0-432 to 0-406		N17-T-350016-548	CTT	129676	129676	H-496	6	0	0

H-600	SCREW, machine: slot drive; RH; steel, nickel pl; #4-48 thd; 17/64" lg; 3/16" lg threaded portion; 5/64" thk x 13/64" diam head	Secures A-600 to A-601	N17-T-350004-868	CTT	78025	78025	H-600,H-726	40	0	0
H-601	Same as H-307	Provides clearance between A-601 and A-603								
H-602	SCREW, machine: slot drive; hex H; steel, nickel pl; #6-40 thd; approx 13/32" lg o/a; 5/16" lg threaded portion; head 1/4" across flats x 3/32" thk	Secures A-602 and A-603 to A-601	N17-T-350012-645 1730-4815240000	CTT	6746	6746	H-602,H-635 H-730,H-806 H-807,H-811 H-826,H-833 H-836,H-838 H-854,H-859 H-879,H-903 H-912,H-965 H-985,H-1061 H-1154,H-1208 H-1224,H-1235 H-1244,H-1259 H-1283,H-1522 H-1524,H-1695 H-1722,H-1725	298	1	62
H-603	Same as H-302	Secures A-602 and A-603 to A-601								
H-604	Same as H-307	Secures A-602 and A-603 to A-601								
H-605	WASHER, lock: steel; round, approx 1/4" ID x 13/32" OD x 0.047" thk o/a; split-ring type	Secures O-600 to A-601	N17-T-350013-230	CTT	104451	104451	H-605	10	1	18
H-606	SCREW, pilot: slot drive; cheese H; steel, nickel pl; #6-32 thd; approx 45/64" lg o/a; threaded portion 5/32" lg; head 11/32" diam x 3/32" lg; pilot 27/64" lg	Secures O-600 to A-601	N17-T-350015-164	CTT	116992	116992	H-606,H-1936	22	1	9
H-607	Same as H-320	Secures A-605 and A-609 to A-608								
H-608	Same as H-302	Secures A-605 and A-609 to A-608								
H-609	Same as H-419	Secures A-605 and A-609 to A-608								
H-610	GROMMET: rubber; fits 7/16" diam hole; 5/16" hole diam x 7/64" wd groove, 23/64" wd x 9/16" diam o/a	Protects W-600 in A-601	N17-T-350001-301	CTT	125016	125016	H-610	10	0	0
H-614	BOLT, double ended: steel, cad pl; #10-32 thd; 3-15/16" lg; 1/2" threaded lg ea end; less nuts	Secures A-604 to A-601	N17-T-350007-837	CTT	73595	73595	H-614	20	0	0
H-615	SCREW, machine: slot drive; RH; steel, nickel pl; #8-36 thd; 27/64" lg; 5/16" lg threaded portion; 7/64" thk x 15/64" diam head	Secures E-602 to A-601		CTT	70829	70829	H-615	20	0	0

TABLE 8-4. COMBINED PARTS AND SPARE PARTS LIST

PARTS										EQUIPMENT SPARE PARTS	
SYMBOL DESIG.	NAME OF PART AND DESCRIPTION	FUNCTION	JAN OR NAVY TYPE DESIG.	SIGNAL CORPS STANDARD NAVY, AIR FORCE STOCK NO.	MANUFACTURERS CODE	MANUFACTURERS DESIG.	TELETYPE PART NO.	ALL SYMBOL DESIGNATIONS INVOLVED	TOTAL NO. PER EQUIP.	BOX	QUAN
H-616	SCREW, set: slot drive; headless; steel; #12-28 thd; 5/16" lg; cup point	Secures E-605 in A-601		N17-T-350015-892	CTT	101746	101746	H-616	20	0	0
H-617	Same as H-320	Secures terminals to E-604									
H-618	Same as H-302	Secures terminals to E-604									
H-619	SCREW, machine: slot drive; RH; iron, nickel pl; #6-32 thd; approx 17/32" lg o/a; threaded portion 7/16" lg; head 3/32" lg x 1/4" diam	Secures terminals to E-604		N17-T-350013-113	CTT	1266	1266	H-619	20	1	9
H-620	NUT, hexagon: brass; #10-32 thd; 3/16" thk; 5/16" across flats	Secures A-604 to A-601		N17-T-350001-166	CG	1720909	125009	H-620,H-623	20	0	0
H-623	Same as H-620	Secures A-604 to A-601									
H-624	WASHER, flat: steel; round, 1-11/64" OD x 3/4" ID x 1/32" thk	Separates 0-608 and 0-609		N17-T-350013-208	CTT	80312	80312	H-624,H-625 H-626,H-720	40	0	0
H-625	Same as H-624	Separates E-608 and 0-609									
H-626	Same as H-624	Separates 0-610 and E-608									
H-627	SCREW, machine: slot drive; hex H; steel, nickel pl; #6-40 thd; approx 19/32" lg o/a; 1/2" lg threaded portion; head 3/32" thk x 1/4" across flats	Secures A-607 and A-608 to A-616		N17-T-350012-650 1730-481852000	CTT	8539	8539	H-627,H-925 H-947,H-1142 H-1379	59	1	24
H-628	Same as H-302	Secures A-607 and A-608 to A-616									
H-629	Same as H-320	Secures A-607 and A-608 to A-616									
H-630	Same as H-320	Secures A-605 to A-608									
H-631	Same as H-302	Secures A-605 to A-608									
H-632	Same as H-419	Secures A-605 to A-608									

H-633	SCREW, machine: slot drive; Fil H; steel, nickel pl; #6-40 thd; approx 13/32" lg o/a; threaded portion 5/16" lg; head 3/32" lg x 3/16" diam	Secures A-606, E-613, E-611, E-609, E-612 and E-610 to A-609	N17-T-350013-158	CTT	1168	1168	H-633,H-636 H-1321,H-1333	52	1 27
H-634	Same as H-302	Secures A-609 to A-608							
H-635	Same as H-602	Secures A-609 to A-608							
H-636	Same as H-633	Secures A-610, E-616, E-615, E-618, E-614, E-617 to A-609							
H-637	SCREW, machine: slot drive; Fil H; steel, nickel pl; #6-32 thd; approx 11/32" lg o/a; approx 1/4" lg threaded portion; head 3/32" thk x 1/4" diam	Secures 0-611 and 0-613 to A-611	N17-T-350013-385	CTT	1064	1064	H-637	30	0 0
H-638	Same as H-410	Secures 0-615, E-620, 0-614, E-619, 0-612 to 0-613							
H-639	Same as H-402	Secures 0-615, E-620, 0-614, E-619 and 0-612 to 0-613							
H-640	Same as H-403	Secures 0-615, E-620, 0-614, E-619 and 0-612 to 0-613							
H-641	SCREW, machine: slot drive; RH; steel, nickel pl; #6-32 thd; approx 15/32" lg; threaded portion 3/8" lg; head 3/32" lg x 1/4" diam	Secures 0-619 to A-611	N17-T-350005-768	CTT	6347	6347	H-641,H-644 H-651	70	0 0
H-642	Same as H-302	Secures 0-619 to A-611							
H-643	Same as H-302	Secures 0-624 to A-611							
H-644	Same as H-641	Secures 0-624 to A-611							
H-645	SCREW, machine: slot and wrench drive; hex H; steel, nickel pl; #6-32 thd; approx 7/16" lg; threaded portion 11/32" lg; head 3/32" thk x 3/16" across flats	Secures 0-622 to 0-619	N17-T-350005-766	CTT	6344	6344	H-645	10	1 18
H-646	CLAMP: governor contact spring clamp; steel, nickel pl; one bolt employed; approx 25/64" lg x 1/4" wd x 3/32" thk o/a; mts by #6-32 tapped hole	Secures 0-622 to 0-619	N17-T-350001-428	CTT	6318	6318	H-646	10	0 0
H-647	SCREW, machine: slot drive; RH; brass; #4-36 thd; approx 53/64" lg; threaded portion 3/4" lg; head 5/64" lg x 13/64" diam	Secures 0-616 to A-611	N17-T-350005-769	CTT	6348	6348	H-647	20	0 0

TABLE 8-4. COMBINED PARTS AND SPARE PARTS LIST

PARTS										EQUIPMENT SPARE PARTS	
SYMBOL DESIG.	NAME OF PART AND DESCRIPTION	FUNCTION	JAN OR NAVY TYPE DESIG.	SIGNAL CORPS STANDARD NAVY, AIR FORCE STOCK NO.	MANUFACTURERS CODE	MANUFACTURERS DESIG.	TELETYPE PART NO.	ALL SYMBOL DESIGNATIONS INVOLVED	TOTAL NO. PER EQUIP.	BOX	QUAN
H-648	Same as H-325	Secures 0-616 to A-611									
H-649	Same as H-302	Secures 0-624 to motor shaft									
H-650	SCREW, machine: slot drive; hex H; steel, nickel pl; #6-40 thd; approx 23/32" lg o/a; 5/8" lg threaded portion; head 3/32" thk x 1/4" across flats	Secures 0-624 to motor shaft		N17-T-350001-443 1730-481544000	CTT	6811	6811	H-650,H-892 H-896,H-908 H-910,H-1173 H-1533,H-1634 H-1731,H-1733	84	1	44
H-651	Same as H-641	Secures 0-620 to A-611									
H-652	Same as H-302	Secures 0-620 to A-611									
H-653	Same as H-320	Secures 0-620 to A-611									
H-654	NUT, hexagon: steel, nickel pl; #6-32 thd; 3/32" thk o/a; approx 1/4" across flats	Secures E-621 to 0-620		N17-T-350005-966	CTT	6345	6345	H-654	10	0	0
H-655	Same as H-302	Secures E-621 to 0-620									
H-656	WASHER, extruded: steel, nickel pl; round, approx 9/32" ID x 1-1/8" OD x 5/16" thk o/a; four formed lugs cut out from circum 1/4" h, equally spaced	Centers R-600 on H-659		N17-T-350004-496	CTT	106200	106200	H-656,H-663	14	1	9
H-657	Same as H-302	Secures A-612 to A-613									
H-658	SCREW, machine: slot drive; Fil H; steel, nickel pl; #6-40 thd; approx 5/16" lg o/a; 3/16" lg threaded portion; head 1/8"; thk x 7/32" diam	Secures A-612 to A-613		N17-T-350012-641 1730-481170000	CTT	1176	1176	H-658,H-664 H-755,H-1012	50	1	18
H-659	SCREW, machine: slot drive; RH; steel, nickel pl; #1/4-20 thd; approx 6-3/16" lg o/a; threaded portion 1-3/16" lg; head 3/16" lg x 1/2" diam	Secures R-600, H-656 and H-663 to A-613		N17-T-350004-451	CTT	106051	106051	H-659	7	0	0
H-660	SCREW, machine: slot drive; Fil H; iron, nickel pl; #10-32 thd; approx 17/32" lg o/a; threaded portion 3/8" lg; head 5/32" lg x 5/16" diam	Secures A-613 to H-662 and H-675		N17-T-350013-150	CTT	1121	1121	H-660	14	1	9

H-661	Same as H-402	Secures A-613 to A-662 and H-675									
H-662	POST: hex steel, nickel pl; approx 3" lg x 5/16" across flats; mts by csk tapped hole ea end	Supports one end of A-613	N17-T-350004-452	CTT	106052	106052	H-662	1	0	0
H-663	Same as H-656	Centers R-600 on H-659									
H-664	Same as H-658	Secures A-612 to A-613									
H-665	Same as H-302	Secures A-612 to A-613									
H-666	SPACER: steel, nickel pl; round; approx 9/32" ID x 13/32" OD x 3/8" lg; mts by ID	Secures H-656, R-600, H-663 and H-659 to A-613	N17-T-350004-498	CTT	106202	106202	H-666	7	1	9
H-667	WASHER, lock: steel; round, approx 1/2" OD x 1/4" ID x 0.047" thk o/a; split-ring type	Secures H-656, R-600, H-663 and H-659 to A-613	N17-T-350013-169 1730-481256000	CTT	2449	2449	H-667,H-881 H-1069,H-1270 H-1282	49	1	48
H-668	NUT, square: steel, nickel pl; 1/4"-20 thd; 5/32" thk; 7/16" sq	Secures H-656, R-600, H-663 and H-659 to A-613	N17-T-350011-809	CTT	106204	106204	H-668	7	1	9
H-670	Same as H-307	Secures H-669 to A-613									
H-671	Same as H-302	Secures H-669 to A-613									
H-672	SCREW, machine: slot drive; Fil H; steel, nickel pl; #6-40 thd; approx 11/32" lg o/a; 5/32" lg threaded portion; head 1/8" thk x 7/32" diam	Secures H-669 to A-613	N17-T-350005-515	CTT	1050	1050	H-672,H-1118	21	1	9
H-673	SCREW, machine: slot drive; cheese H; steel, nickel pl; #4-40 thd; approx 1/4" lg o/a; threaded portion 3/16" lg; head 1/16" lg x 3/16" diam	Secures C-600 to A-613	N17-T-350001-130	CTT	110434	110434	H-673	14	1	0
H-674	Same as H-325	Secures C-600 to A-613									
H-675	POST: steel, nickel pl; approx 1-1/4" lg x 5/16" across flats; mts by csk tapped hole ea end	Supports one end of A-613	N17-T-350004-453	CTT	106053	106053	H-675	7	0	0
H-676	Same as H-407	Secures H-675 and H-662 to motor plate									
H-677	Same as H-303	Secures terminal to A-615									
H-678	Same as H-302	Secures terminal to A-615									
H-679	CLIP: for holding capacitor in place; tin plate; approx 2-3/4" lg x 11/32" wd x 0.010" thk o/a; straight ends tapered to one end, half round hole in wd end	Secures C-601 to A-615	N17-T-350011-347	CTT	99357	99357	H-679,H-1329 H-1428,H-1607	58	0	0

TABLE 8-4. COMBINED PARTS AND SPARE PARTS LIST

PARTS										EQUIPMENT SPARE PARTS	
SYMBOL DESIG.	NAME OF PART AND DESCRIPTION	FUNCTION	JAN OR NAVY TYPE DESIG.	SIGNAL CORPS STANDARD NAVY, AIR FORCE STOCK NO.	MANUFACTURERS CODE	MANUFACTURERS DESIG.	TELETYPE PART NO.	ALL SYMBOL DESIGNATIONS INVOLVED	TOTAL NO. PER EQUIP.	BOX	QUAN
H-680	SCREW, machine: slot drive; Fil H; steel, nickel pl; #6-40 thd; approx 13/32" lg o/a; threaded portion 9/32" lg; head 1/8" lg x 7/32" diam	Secures A-614 to A-615		N17-T-350013-136	CTT	1038	1038	H-680	10	0	0
H-681	Same as H-302	Secures A-614 to A-615									
H-682	WASHER, flat: steel, nickel pl; round, approx 9/64" ID, 9/32" OD, 0.035" thk	Secures A-614 to A-615		N17-T-350006-857	CTT	36273	36273	H-682	10	0	0
H-683	Same as H-320	Secures E-623, L-600, E-625 and E-624 to A-614									
H-684	SCREW, machine: slot, wrench drive; hex H; steel, nickel pl; #6-40 thd; approx 1-1/32" lg o/a; threaded portion 5/8" lg; head 1/4" across flats x 3/32" thk	Secures E-623, L-600, E-625 and E-624 to A-614		N17-T-350004-869	CTT	78028	78028	H-684	10	0	0
H-685	Same as H-320	Secures terminal to A-615									
H-686	SCREW, machine: slot drive; FH; steel, nickel pl; #6-40 thd; 9/32" lg; threaded portion 7/32" lg; 1/16" diam head	Secures terminal to A-615		N17-T-350002-375	CTT	82702	82702	H-686	10	0	0
H-687	SCREW, machine: slot and wrench drive; hex H; steel, nickel pl; #6-40 thd; approx 5/16" lg o/a; threaded portion 7/32" lg; 1/16" thk; 9/32" diam head	Secures A-615 to A-616		N17-T-350012-657	CTT	74059	74059	H-687	20	0	0
H-688	Same as H-302	Secures A-615 to A-616									
H-689	Same as H-320	Secures A-615 to A-616									
H-690	CLIP: capacitor; tin plate; approx 4-3/8" lg x 13/32" wd x 0.010" thk o/a; half round hole near wd end, elongated hole in wd ear one edge	Binds C-603 and C-602 together		*3	CTT	121927	121927	H-690	10	0	0
H-691	Same as H-303	Secures E-623, L-600, E-625 and E-624 to A-614									
H-692	Same as H-302	Secures E-623, L-600, E-625 and E-624 to A-614									

H-693	SCREW, machine: slot drive, hex H; steel, nickel pl; #6-40 thd; 17/32" lg o/a; 7/16" lg threaded portion; head 1/4" across flats x 3/32" thk	Secures A-607 and A-608 to A-616		N17-T-350002-363 1730-484387870	CTT	82440	82440	H-693,H-1149 H-1151,H-1610 H-1764	42	1	26
H-697	Same as H-403	Secures E-627, R-601 and E-626 to A-617									
H-698	SCREW, machine: slot drive; flat Fil H; steel, copper pl; #6-40 thd; approx 2-19/32" lg o/a; head 5/32" lg x 1/4" diam; threaded portion 3/8" lg; flange 2-1/16" lg x 5/32" diam	Secures E-627, R-601 and E-626 to A-617		N17-T-350005-719	CTT	1297	1297	H-698,H-1692	12	0	0
H-699	WASHER, lock: round, approx 3/8" OD x 7/32" ID x 0.020" thk o/a; straight internal teeth	Secures E-629, E-628, R-603 or R-602, E-631 and E-630 to A-618		N17-T-350011-231	CAXO	1210	98642	H-699,H-979	13	0	0
H-700	NUT, hexagon: steel, nickel pl; #10-24 thd; 1/8" thk; 3/8" across flats	Secures E-629, E-628 R-603 or R-602, E-631 and E-630 to A-618		N17-T-350007-498 1730-482542000	CTT	70887	70887	H-700	6	0	0
H-701	WASHER, flat: brass; round, 1/4" OD x 1/8" ID x 0.032" thk	Secures terminal to E-629		N17-T-350005-731	CTT	2438	2438	H-701,H-1374	45	1	9
H-702	Same as H-325	Secures terminal to E-629									
H-703	SCREW, machine: slot drive; Fil H; brass; #4-40 thd; approx 5/16" lg o/a; 7/32" lg threaded portion; head 1/16" thk x 1/4" diam	Secures terminal to E-629		N17-T-350013-133 1730-481116000	CTT	1028	1028	H-703,H-1682 H-1375,H-1427 H-1432	108	1	54
H-704	SCREW, machine: slot drive; FH; iron, nickel pl; #10-32 thd; approx 1-1/2" lg; threaded portion 1-25/64" lg; head 5/64" lg x 3/8" diam	Secures E-632, R-604, E-633, E-634, C-604, E-635 and H-708 to A-618		N17-T-350008-306	CTT	75429	75429	H-704	6	0	0
H-705	Same as H-402	Secures A-618 to A-1501 or A-1701									
H-706	Same as H-449	Secures A-618 to A-1501 or A-1701									
H-707	SCREW, machine: slot drive; RH; iron, nickel pl; #10-24 thd; approx 4-5/32" lg; threaded portion 1-1/4" to 2" lg; head 5/32" thk x 13/32" diam	Secures E-630, E-631, R-602 or R-603, E-628 and E-629 to A-618		N17-T-350005-750 1730-481448000	CTT	4871	4871	H-707	6	0	0
H-708	CLAMP: condenser holding strap; steel, nickel pl; two bolts employed; approx 5-1/4" lg x 1/2" wd x 3/32" thk o/a; two 3/16" mtg holes 4-15/16" c to c; holds 3/4" diam unit	Secures E-635, C-604, E-634, E-633, R-604 and E-632 to A-618		N17-T-350005-598	CTT	2980	2980	H-708	3	0	0
H-709	Same as H-402	Secures H-708, E-635, C-604, E-634, E-633, R-604 and E-632 to A-618									

*3 Shop Manufacture

TABLE 8-4. COMBINED PARTS AND SPARE PARTS LIST

PARTS										EQUIPMENT SPARE PARTS	
SYMBOL DESIG.	NAME OF PART AND DESCRIPTION	FUNCTION	JAN OR NAVY TYPE DESIG.	SIGNAL CORPS STANDARD NAVY, AIR FORCE STOCK NO.	MANUFACTURERS CODE	MANUFACTURERS DESIG.	TELETYPE PART NO.	ALL SYMBOL DESIGNATIONS INVOLVED	TOTAL NO. PER EQUIP.	BOX	QUAN
H-710	Same as H-410	Secures H-708, E-635, C-604, E-634, E-633, R-604 and E-632 to A-618									
H-711	Same as H-305	Secures B-700 to armature shaft									
H-712	Same as H-302	Secures B-700 to armature shaft									
H-713	SCREW, machine: slot drive; RH; steel, nickel pl; #4-48 thd; approx 29/64" lg o/a; threaded portion 3/8" lg; head 5/64" lg x 13/64" diam	Secures S-700 to A-701		N17-T-350002-755	CTT	86713	86713	H-713	20	0	0
H-714	WASHER, lock: steel; round, approx 1" OD x 13/32" ID x 0.018" thk o/a; split-ring type	Secures 0-701 in A-701		N17-T-350012-666	CTT	80313	80313	H-714	10	0	0
H-715	NUT, hex: steel, nickel pl; #8-36 thd; 1/8" thk; 3/8" across flats	Secures A-701 and A-704 to 0-709		N17-T-350005-691	CTT	126237	126237	H-715	20	0	0
H-716	WASHER, flat: brass; round, 11/16" OD x 13/32" ID x 0.031" thk o/a	Spacer between 0-700 and shoulder on armature shaft		N17-T-350013-213	CTT	82845	82845	H-716,H-721	20	0	0
H-717	PIN, cotter: music wire; 5/32" wd x 11/32" lg o/a; 0.025" diam wire	Secures E-704 to E-703		N17-T-350012-674 1730-043017586	CTT	89407	89407	H-717	30	1	27
H-718	WASHER, flat: bronze; round, 5/16" OD x 9/64" ID x 1/64" h, 0.010" thk material; curved	Secures E-704 to E-703		N17-T-350013-236	CTT	89406	89406	H-718	30	0	0
H-719	WASHER, cup: steel; round, 63/64" OD x 13/32" ID x 5/32" thk o/a; extruded 25/32" diam x 1/8" h	Provides seat for 0-706 and retains 0-705 in A-704		N17-T-350012-665	CTT	80311	80311	H-719	10	0	0
H-720	Same as H-624	Provides seat for 0-706									
H-721	Same as H-716	Spacer between 0-707 and shoulder on armature shaft									
H-724	Same as H-302	Secures A-705 to A-830									
H-725	Same as H-303	Secures A-705 to A-830									
H-726	Same as H-600	Secures A-703 to 0-709									

H-727	GROMMET, bushing: rubber; fits 5/8" slot; tapered axial hole 9/32" x 11/32" wd, approx 7/16" lg o/a; 5/8" wd x 1/2" h; rounded one side; other side flat	Insulates W-700 from O-709	N17-T-350004-253	GE	K-5828 852 AA1	103431	H-727	10	0	0
H-728	BOLT, machine: slot drive; RH; steel, cad pl; #8-36 thd; 4-1/2" lg; 1" lg threaded portion; 1/8" thk x 3/8" diam head; 9/64" diam shank	Secures A-704 and A-701 to O-709	N17-T-350004-172	CTT	102774	102774	H-728	20	0	0
H-730	Same as H-602	Secures A-705 to A-830								
H-731	SCREW, machine: slot or wrench drive; hex H; steel, nickel pl; #6-40 thd; approx 1/2" lg o/a; threaded portion 13/32" lg; head 1/32" lg x 1/4" across flats	Secures A-705 to A-830	N17-T-350001-961 1730-483634000	CTT	74986	74986	H-731,H-822 H-1005,H-1530 H-1776	34	1	6
H-733	CLAMP: cable; steel, nickel pl; one bolt employed; approx 7/8" lg x 3/8" wd x 5/16" h o/a; accommodates 5/16" cable	Secures cable to A-705	4T93807 N17-T-350016-270	CTT	93807	93807	H-733,H-1275 H-1286,H-1288	33	0	0
H-734	Same as H-302	Secures A-705 and H-733 to A-830								
H-735	Same as H-303	Secures A-705 and H-733 to A-830								
H-736	SCREW, machine: slot drive; hex H; steel, zinc and chromate; #4-40 thd; 11/32" lg o/a; approx 1/4" lg threaded portion; head 3/32" thk, 3/16" across flats	Secures A-707 to A-805	N17-T-350001-829	CTT	74613	74613	H-736,H-1311 H-1457,H-1471	50	1	27
H-737	Same as H-325	Secures A-707 to A-805								
H-738	WASHER, flat: steel; round, 1/8" ID, 1/4" OD, 1/32" thk; case hardened	Secures A-707 to A-805	N17-T-350006-873 1730-481366000	CTT	41675	41675	H-738,H-1462	17	1	9
H-739	Same as H-320	Secures E-705 to H-742								
H-740	Same as H-302	Secures E-705 to H-742								
H-741	NUT, hex: steel, nickel pl; #6-40 thd; 1/16" thk o/a; approx 1/4" across flats	Secures E-705 to H-742	N17-T-350005-747 1730-481366000	CTT	3606	3606	H-741,H-760 H-761,H-865 H-872,H-919 H-935,H-943 H-957,H-1170 H-1213,H-1328 H-1382,H-1388 H-1436,H-1446 H-1539,H-1543 H-1545,H-1557 H-1574,H-1582 H-1585,H-1658	206	1	84

TABLE 8-4. COMBINED PARTS AND SPARE PARTS LIST

PARTS									EQUIPMENT SPARE PARTS	
SYMBOL DESIG.	NAME OF PART AND DESCRIPTION	FUNCTION	JAN OR NAVY TYPE DESIG.	SIGNAL CORPS STANDARD NAVY, AIR FORCE STOCK NO.	MANUFACTURERS CODE	MANUFACTURERS DESIG.	TELETYPE PART NO.	ALL SYMBOL DESIGNATIONS INVOLVED	TOTAL NO. PER EQUIP.	BOX	QUAN
H-742	STUD: steel, nickel pl; approx 1-3/32" lg x 1/4" wd across hex flats o/a; shoulder 5/32" lg x 1/4" diam; one end threaded 19/32" lg w/#6-40 thd, opposite end threaded 9/32" lg w/#6-40 thd	Secures E-705, TB-700 and E-707 to A-708		4T126982 N17-T-350016-253	CTT	126982	126982	H-742	28	0	0
H-743	Same as H-301	Secures H-745 to A-708									
H-744	Same as H-302	Secures H-745 to A-708									
H-745	CLAMP, cable: steel, nickel pl; one bolt employed; approx 1-1/2" lg x 5/8" wd x 13/32" h o/a; accommodates 5/16" and 13/32" cable	Secures cable to A-708		*3	CTT	123539	123539	H-745	7	0	0
H-749	Same as H-302	Secures J-700 and H-764 to A-708									
H-750	Same as H-301	Secures J-700 and H-764 to A-708									
H-751	SCREW, machine: slot drive; RH; brass; #6-40 thd; approx 2-15/32" lg o/a; threaded portion 3/8" lg; head 3/32" lg x 1/4" diam	Secures R-700, E-708 and E-709 to A-709		N17-T-350004-861	CTT	77902	77902	H-751,H-754	8	0	0
H-752	Same as H-302	Secures R-700, E-708 and E-709 to A-709									
H-753	WASHER, flat: steel, nickel pl; round, approx 5/32" ID x 7/16" OD x 1/16" thk o/a	Secures R-700, E-708 and E-709 to A-709		N17-T-350013-206 1730-483740000	CTT	76461	76461	H-753,H-758	8	0	0
H-754	Same as H-751	Secures R-701, E-710 and E-711 to A-709									
H-755	Same as H-658	Secures C-700 to A-709									
H-756	Same as H-302	Secures C-700 to A-709									
H-757	Same as H-302	Secures R-701, E-710 and E-711 to A-709									
H-758	Same as H-753	Secures R-701, E-710 and E-711 to A-709									
H-759	Same as H-302	Secures E-705, TB-700 and E-707 and A-709 to A-708									

H-760	Same as H-741	Secures E-705, TB-700, E-707 and A-709 to A-708								
H-761	Same as H-741	Secures TB-700, E-707 and A-709 to A-708, also secures ground terminal to A-709								
H-762	Same as H-302	Secures TB-700, E-707 and A-709 to A-708, also secures ground terminal to A-709								
H-763	Same as H-320	Secures TB-700, E-707 and A-709 to A-708, also secures ground terminal to A-709								
H-764	CLAMP: nickel silver; one bolt employed; approx 9/16" lg x 1/4" wd x 5/16" h o/a; w/1 9/64" mtg hole; "L" shaped one end formed C	Holds plug in J-700	N17-T-350016-668	CTT	129559	129559	H-764	14	0	0
H-800	SCREW, machine: slot drive; hex H; steel, nickel pl; #10-32 thd; approx 1/2" lg o/a; 3/8" lg threaded portion; hand 1/8" thk x 5/16" across flats	Secures I-800 to A-800	N17-T-350012-646 1730-481542000	CTT	6810	6810	H-800,H-1274 H-1285,H-1287	28	1	6
H-801	Same as H-403	Secures I-800 to A-800								
H-802	Same as H-410	Secures I-800 to A-800								
H-803	SCREW, machine: slot drive; Fil H; steel, nickel pl; #6-40 thd; approx 29/32" lg o/a; threaded portion 7/16" lg; 9/32" diam head; shoulder 13/32" lg x 3/16" diam	Secures O-801 and O-800 to A-801	N17-T-350015-673	CTT	6799	6799	H-803,H-1133	14	0	0
H-804	SCREW, machine; spacer rack, slot drive; Fil H; steel, nickel pl; #6-40 thd; 31/64" lg o/a; thread 1/8" lg; head 3/32" lg x 9/32" diam; shoulder 1/4" lg x 3/16" diam	Secures O-803 and O-804 to A-804	N17-T-350001-143	CTT	125178	125178	H-804	7	0	0
H-805	Same as H-403	Secures O-803 to O-304								
H-806	Same as H-602	Secures O-803 to O-804								
H-807	Same as H-602	Secures O-806 to A-805								
H-808	Same as H-302	Secures O-806 to A-805								
H-809	Same as H-320	Secures O-806 to A-805								

*3 Shop Manufacture

TABLE 8-4. COMBINED PARTS AND SPARE PARTS LIST

PARTS

SYMBOL DESIG.	NAME OF PART AND DESCRIPTION	FUNCTION	JAN OR NAVY TYPE DESIG.	SIGNAL CORPS STANDARD NAVY, AIR FORCE STOCK NO.	MANUFACTURERS CODE	MANUFACTURERS DESIG.	TELETYPE PART NO.	ALL SYMBOL DESIGNATIONS INVOLVED	TOTAL NO. PER EQUIP.	EQUIPMENT SPARE PARTS BOX	EQUIPMENT SPARE PARTS QUAN
H-810	SCREW, shoulder: slot drive; Fil H; steel, nickel pl; #6-40 thd; approx 5/16" lg o/a; threaded portion 1/8" lg; 9/32" diam head; shoulder 3/32" lg x 3/16" diam	Secures 0-805 to A-805		N17-T-350015-430	CTT	6805	6805	H-810,H-933 H-934,H-953 H-954,H-956	49	1	6
H-811	Same as H-602	Secures tape chute to A-805									
H-812	Same as H-302	Secures tape chute to A-805									
H-813	PLATE, clamp: steel, nickel pl; round; approx 1/8" lg x 3/8" OD x 1/8" ID; mts by ID; chamfered shoulder on one end	Secures tape chute to A-805		N17-T-350009-552	CTT	86561	86561	H-813	14	0	0
H-814	Same as H-325	Secures H-815 to 0-808									
H-815	SCREW, adjustment: steel, nickel pl; armature eccentric stop	Provides means for adjusting 0-808		N17-T-350013-171	CTT	6942	6942	H-815	7	1	6
H-816	NUT, hexagon: steel, nickel pl; #4-40 thd; approx 1/16" thk o/a; 1/4" across flats	Secures H-815 to 0-808		N17-T-350001-164 1730-480720000	CTT	110435	110435	H-816,H-1126 H-1197,H-1345 H-1405,H-1430 H-1665	45	1	24
H-817	SCREW, pilot: slot drive; FH; steel, nickel pl; #4-40 thd; approx 3/8" lg o/a; 3/32" lg threaded portion; 1/16" thk x 3/16" diam head; 3/32" diam x 7/32" lg pilot	Secures A-808 to A-802		N17-T-350012-544	CTT	6801	6801	H-817,H-1125 H-1136	21	1	6
H-818	SCREW, machine: slot drive; Fil H; steel, nickel pl; #6-40 thd; approx 1/2" lg o/a; 3/8" lg threaded portion; head 1/8" thk x 7/32" diam	Secures A-803 and 0-809 to A-805		N17-T-350012-638 1730-481114000	CTT	1026	1026	H-818,H-1025 H-1045,H-1257 H-1553,H-1559 H-1680	52	1	24
H-819	Same as H-302	Secures A-803 and 0-809 to A-805									
H-820	TERMINAL, lug: straight type; german silver; wire hole at ea end; approx 13/16" lg x 5/16" wd x 0.015" thk o/a; w/3/16" stud hole; solder connects to wire	Anchors 0-802		N17-T-350005-853	CTT	125703	125703	H-820	7	0	0
H-821	Same as H-307	Provides clearance between A-803 and 0-809									
H-822	Same as H-731	Secures H-824 to A-805									

| | | |

TABLE 8-4. COMBINED PARTS AND SPARE PARTS LIST

PARTS									EQUIPMENT SPARE PARTS	
SYMBOL DESIG.	NAME OF PART AND DESCRIPTION	FUNCTION	JAN OR NAVY TYPE DESIG.	SIGNAL CORPS STANDARD NAVY, AIR FORCE STOCK NO.	MANUFACTURERS CODE	MANUFACTURERS DESIG.	TELETYPE PART NO.	ALL SYMBOL DESIGNATIONS INVOLVED	TOTAL NO. PER EQUIP.	BOX	QUAN
H-841	SCREW, machine: slot or wrench drive; hex H; steel, nickel pl; #10-32 thd; approx 5/8" lg o/a; 1/2" lg threaded portion; head 1/8" thk x 5/16" across flats	Secures H-1239 and H-839 to A-805		N17-T-350012-644 1730-481522000	CTT	6745	6745	H-841,H-873 H-898,H-960 H-967,H-1094 H-1183,H-1243 H-1247,H-1256 H-1267	146	1	24
H-842	Same as H-308	Provides clearance between O-811 and function pull bars									
H-843	Same as H-839	Supports one end of O-810									
H-844	LINK: steel, nickel pl; approx 29/32" lg x 7/16" wd x 0.035" thk o/a; mts by two body holes	Positions one end of O-810 on A-805		N17-T-350015-163	CTT	119629	119629	H-844,H-1147 H-1239,H-1250 H-1296	35	0	0
H-845	Same as H-402	Secures H-844 and H-843 to A-805									
H-846	Same as H-320	Secures A-808 to O-810									
H-847	Same as H-302	Secures A-808 to O-810									
H-848	Same as H-602	Secures A-808 to O-810									
H-849	Same as H-837	Secures O-811 to O-810									
H-850	Same as H-838	Secures O-811 to O-810									
H-851	SCREW, machine: slot drive; hex H; steel, nickel pl; #6-40 thd; approx 1/2" lg o/a; threaded portion 17/64" lg; head 1/4" across flats x 3/32" lg; shoulder 9/64" lg x 9/64" diam	Secures O-914 and O-916 to A-809		N17-T-350015-639	CTT	120896	120896	H-851,H-856 H-997	28	0	0
H-852	Same as H-302	Secures O-914 and O-916 to A-809									
H-853	Same as H-320	Secures O-914 and O-916 to A-809									
H-854	Same as H-602	Secures A-809 to O-810									
H-855	Same as H-302	Secures A-809 to O-810									
H-856	Same as H-851	Secures O-914 and O-916 to A-810									

H-857	Same as H-302	Secures 0-914 and 0-916 to A-810								
H-858	Same as H-320	Secures 0-914 and 0-916 to A-810								
H-859	Same as H-602	Secures A-810 to 0-810								
H-860	Same as H-302	Secures A-810 to 0-810								
H-861	Same as H-303	Secures 0-917, 0-918, 0-919, 0-920, 0-921, 0-922 to 0-923								
H-862	Same as H-302	Secures 0-917, 0-918, 0-919, 0-920, 0-921, 0-922 to 0-923								
H-863	WASHER, flat; steel; round, 5/32" ID, 17/32" OD, 0.020" thk	Secures 0-917, 0-918, 0-919, 0-920, 0-921, 0-922 to 0-923	N17-T-350005-773	CTT	6987	6987	H-863,H-1291 H-1292,H-1293 H-1294,H-1295	84	O	O
H-864	STUD: steel, nickel pl; approx 25/32" lg x 9/32" diam o/a; shoulder 0.019" thk; one end threaded 1/4" lg w/#6-40 thd, opposite end threaded 5/32" lg w/#6-40 thd; csk hole in shank	Provides pivot for 0-918, 0-919, 0-920, 0-921 to 0-922	N17-T-350006-236	CTT	7484	7484	H-864	14	O	O
H-865	Same as H-741	Secures H-864 to 0-923								
H-866	Same as H-410	Secures 0-924 and 0-925 to 0-927								
H-867	WASHER, lock; steel; round, 3/16" ID, 5/16" OD, 1/16" thk; split-ring type	Secures 0-924 and 0-925 to 0-922	N17-T-350006-908	CTT	45815	45815	H-867,H-877	14	O	O
H-868	WASHER, flat; steel, nickel pl; round, 3/16" ID, 11/32" OD, 1/32" thk	Secures 0-924 and 0-925 to 0-927	N17-T-350008-153	CTT	74334	74334	H-868,H-876	14	O	O
H-869	SCREW, machine; hex H; steel, nickel pl; #6-40 thd; 5/16" lg o/a; threaded portion 1/8" lg; head 1/4" across flats x 1/16" wd; shoulder 7/32" lg x 3/16" diam	Secures 0-926 to 0-927	N17-T-350016-715 1730-043605091	CTT	112575	112575	H-869	14	O	O
H-870	Same as H-302	Secures 0-926 to 0-927								
H-872	Same as H-741	Secures 0-926 to 0-927								
H-873	Same as H-841	Secures 0-923 to A-811								
H-874	Same as H-402	Secures 0-923 to A-811								
H-875	Same as H-403	Secures 0-923 to A-811								
H-876	Same as H-868	Secures 0-929 and 0-930 to 0-927								

TABLE 8-4. COMBINED PARTS AND SPARE PARTS LIST

PARTS										EQUIPMENT SPARE PARTS	
SYMBOL DESIG.	NAME OF PART AND DESCRIPTION	FUNCTION	JAN OR NAVY TYPE DESIG.	SIGNAL CORPS STANDARD NAVY, AIR FORCE STOCK NO.	MANUFACTURERS CODE	MANUFACTURERS DESIG.	TELETYPE PART NO.	ALL SYMBOL DESIGNATIONS INVOLVED	TOTAL NO. PER EQUIP.	BOX	QUAN
H-877	Same as H-867	Secures 0-929 and 0-930 to 0-927									
H-878	Same as H-410	Secures 0-929 and 0-930 to 0-927									
H-879	Same as H-602	Secures 0-931 to 0-927									
H-880	Same as H-302	Secures 0-931 to 0-927									
H-881	Same as H-667	Secures 0-932 to 0-935									
H-882	WASHER, lock: steel, round, 5/8" OD x 3/8" ID x 0.062" thk; split-ring type	Secures 0-927 to 0-935			CTT	70891	70891	H-882	7	0	0
H-883	RETAINER: oiler; nickel silver; both ends formed, "U" formed mtg arm; approx 15/16" lg x 3/8" wd x 3/8" thk o/a; single mtg hole	Supports 0-934		N17-T-350003-602 1730-040821214	CTT	98151	98151	H-883	7	0	0
H-884	Same as H-838	Secures one end of 0-936 to A-811									
H-886	Same as H-302	Secures A-813 to A-811									
H-887	SCREW, machine: slot drive; hex H; steel, nickel pl; #6-40 thd; approx 7/16" lg o/a; 11/32" lg threaded portion; head 3/32" thk x 1/4" across flats	Secures A-813 to A-811		N17-T-350002-237	CTT	80342	80342	H-887,H-893 H-899,H-905 H-918,H-936 H-944,H-958	84	1	6
H-888	WASHER, flat: steel, nickel pl; round, approx 1/8" ID x 3/8" OD x 1/32" thk	Secures H-889 to A-811		N17-T-350005-442 1740-481030000	CTT	125802	125802	H-888,H-1315 H-1356,H-1626 H-1782	28	1	24
H-889	SCREW, spade: steel; #3-48 thd; 3/16" lg; 3/64" hole in spade	Anchors 0-940		N17-T-350012-536	CTT	125430	125430	H-889	7	1	6
H-890	NUT, hexagon: steel, nickel pl; #3-48; 3/32" thk; 3/16" across flats	Secures H-889 to A-811		N17-T-350007-450	CTT	70073	70073	H-890	7	0	0
H-891	Same as H-307	Secures A-816 and A-817 to A-811									
H-892	Same as H-650	Secures A-816 and A-817 to A-811									
H-893	Same as H-887	Secures A-815 to A-811									

| | | |

TABLE 8-4. COMBINED PARTS AND SPARE PARTS LIST

PARTS									EQUIPMENT SPARE PARTS	
SYMBOL DESIG.	NAME OF PART AND DESCRIPTION	FUNCTION	JAN OR NAVY TYPE DESIG.	SIGNAL CORPS STANDARD NAVY, AIR FORCE STOCK NO.	MANUFACTURERS CODE	MANUFACTURERS DESIG.	TELETYPE PART NO.	ALL SYMBOL DESIGNATIONS INVOLVED	TOTAL NO. PER EQUIP.	BOX	QUAN
H-915	SCREW, shoulder: slot drive; FH; steel, nickel pl; #6-40 thd; approx 15/32" lg o/a; 1/4" lg threaded portion; head 9/32" diam x 3/32" thk; neck between head and shoulder	Secures 0-955 to A-811		N17-T-350005-771 1730-481532000	CTT	6800	6800	H-915,H-917 H-937,H-955 H-959,H-1174 H-1289	42	1	6
H-916	STUD: steel; approx 17/32" lg x 5/32" diam o/a; one end threaded 3/16" lg w/#4-40 thd, drive slot and groove at other end	Anchors 0-940		N17-T-350001-296	CTT	125696	125696	H-916	7	0	0
H-917	Same as H-915	Secures 0-957 to 0-956									
H-918	Same as H-887	Secures 0-967 to 0-971									
H-919	Same as H-741	Secures 0-967 to 0-971									
H-920	Same as H-468	Secures 0-959, 0-958 and H-922 to A-816									
H-921	WASHER, flat: steel, nickel pl; round, 5/16" ID, 5/8" OD, 1/16" thk	Secures 0-959, 0-958 and H-922 to A-816		N17-T-350007-524	CTT	71266	71266	H-921,H-940	14	1	12
H-922	WASHER, flat: steel, nickel pl; round, 21/32" ID, 1" OD, 3/32" thk	Provides clearance between 0-958 and A-816		N17-T-350005-524	CTT	70793	70793	H-922,H-941	14	0	0
H-923	Same as H-303	Secures A-817 and A-816 to A-811									
H-924	Same as H-302	Secures A-817 and A-816 to A-811									
H-925	Same as H-627	Secures A-816 to A-811									
H-926	SCREW, machine: slot drive; FH; steel, nickel pl; #6-40 thd; approx 1/4" lg o/a; 5/32" lg threaded portion; head 1/16" lg x 5/32" diam	Secures 0-963 to 0-968		N17-T-350001-795 1730-483298000	CTT	74536	74536	H-926,H-929 H-930,H-942 H-950,H-952	42	1	6
H-927	NUT, hexagon: steel, nickel pl; 5/16"-32; approx 1/8" thk, 7/16" across flats	Secures 0-959, 0-958 and H-922 to A-816		N17-T-350012-484	CTT	2201	2201	H-927,H-938	14	1	6
H-928	Same as H-403	Provides seat for 0-962									
H-929	Same as H-926	Secures 0-965 to 0-968									

H-930	Same as H-926	Secures O-966 to O-971
H-931	Same as H-302	Secures A-816 to A-811
H-932	Same as H-320	Secures A-816 to A-811
H-933	Same as H-810	Secures O-969 to O-970 and O-972
H-934	Same as H-810	Secures O-972 to O-974
H-935	Same as H-741	Secures O-970 to O-971
H-936	Same as H-887	Secures O-970 to O-971
H-937	Same as H-915	Secures O-974 to A-811
H-938	Same as H-927	Secures O-975, O-976 and H-941 to A-819
H-939	Same as H-468	Secures O-975, O-976 and H-941 to A-819
H-940	Same as H-921	Secures O-975, O-976 and H-941 to A-819
H-941	Same as H-922	Provides clearance between O-975 and A-819
H-942	Same as H-926	Secures O-983 to O-977
H-943	Same as H-741	Secures O-978 to O-989
H-944	Same as H-887	Secures O-978 to O-989
H-945	Same as H-303	Secures A-818 and A-819 to A-811
H-946	Same as H-302	Secures A-818 and A-819 to A-811
H-947	Same as H-627	Secures A-819 to A-811
H-948	Same as H-302	Secures A-819 to A-811
H-949	Same as H-320	Secures A-819 to A-811
H-950	Same as H-926	Secures O-979 to O-977
H-951	Same as H-403	Provides seat for O-981
H-952	Same as H-926	Secures O-982 to O-989

TABLE 8-4. COMBINED PARTS AND SPARE PARTS LIST

PARTS										EQUIPMENT SPARE PARTS	
SYMBOL DESIG.	NAME OF PART AND DESCRIPTION	FUNCTION	JAN OR NAVY TYPE DESIG.	SIGNAL CORPS STANDARD NAVY, AIR FORCE STOCK NO.	MANUFACTURERS CODE	MANUFACTURERS DESIG.	TELETYPE PART NO.	ALL SYMBOL DESIGNATIONS INVOLVED	TOTAL NO. PER EQUIP.	BOX	QUAN
H-953	Same as H-810	Secures 0-985 to 0-984									
H-954	Same as H-810	Secures 0-987 to 0-985									
H-955	Same as H-915	Secures 0-984 to A-811									
H-956	Same as H-810	Secures 0-987 to 0-988									
H-957	Same as H-741	Secures 0-988 to 0-989									
H-958	Same as H-887	Secures 0-988 to 0-989									
H-959	Same as H-915	Secures 0-990 to A-820									
H-960	Same as H-841	Provides means for adjusting 0-993									
H-961	Same as H-410	Secures H-960 to 0-994									
H-962	WASHER, flat: steel; round, 7/32" ID, 1/2" OD, 0.040" thk	Provides clearance between 0-994 and A-820		6L58023-119 N43-W-7523-122	CTT	124512	124512	H-962	14	0	0
H-963	SCREW, pilot: slot drive; flat top Bind H; steel, nickel pl; 1/4"-32; approx 23/32" lg o/a; threaded portion 3/16" lg; 3/32" thk x 11/32" diam head; pilot 7/16" lg x 3/16" diam	Secures 0-1000 to 0-994		N17-T-350012-543	CTT	1100	1100	H-963	7	1	6
H-964	WASHER, lock: steel; round, 1/4" ID, 1/2" OD, 1/16" thk; split-ring type	Secures 0-1000 to 0-994		N17-T-350013-121	CTT	2322	2322	H-964	7	1	12
H-965	Same as H-602	Secures 0-997 to A-820									
H-966	Same as H-302	Secures A-820 to A-805									
H-967	Same as H-841	Secures A-820 to A-805									
H-968	SCREW, machine: slot drive; flat Fil H; steel, nickel pl; #10-32 thd; 13/32" lg o/a; threaded portion 5/16" lg; head 3/32" lg x 1/4" diam	Secures H-978 to A-820		N17-T-350010-791	CTT	97296	97296	H-968	7	1	4

H-969	SCREW, machine: slot drive; Fil H; steel, nickel pl; #10-32 thd; 1-5/32" lg o/a; threaded portion 1" lg; head 5/32" lg x 3/16" diam	Provides means for adjusting tension on 0-991		N17-T-350013-109	CTT	1245	1245	H-969	7	0	0
H-970	Same as H-410	Secures H-969 to A-820									
H-971	Same as H-402	Secures H-969 to A-820									
H-972	NUT, hexagon: steel, nickel pl; 1/4"-32; 3/32" thk o/a; approx 7/16" across flats	Secures H-974 to A-820		N17-T-350001-159 1730-480700000	CTT	125218	125218	H-972,H-1037 H-1041,H-1048 H-1070,H-1110	42	1	6
H-973	POST, spring: steel, nickel pl; approx 3/4" lg x 1/8" diam o/a; mts by 3/32" diam shank one end, other end 3/64" radial hole	Anchors 0-1002		N17-T-350001-351	CTT	2480	2480	H-973	7	0	0
H-974	SCREW, pilot: wrench or slot drive; hex H; steel, nickel pl; 1/4"-32; 11/16" lg o/a; threaded portion 7/16" lg; head 3/32" thk x 3/8" across flats; pilot 5/32" lg x 5/32" diam	Supports and provides pivot for 0-1001		N17-T-350005-774 1730-481606000	CTT	6990	6990	H-974,H-1109	14	1	6
H-975	Same as H-320	Secures 0-1003 to A-820									
H-976	Same as H-302	Secures 0-1003 to A-820									
H-977	SCREW, machine: slot drive; hex H; steel, nickel pl; #6-40 thd; approx 27/32" lg o/a; 13/32" lg threaded portion; head 3/32" thk, 1/4" across flats	Secures 0-1003 to A-820		N17-T-350007-655 1730-482654000	CTT	72508	72508	H-977,H-984 H-1054	35	1	12
H-978	HANDLE: steel, nickel pl; 2-11/16" lg x 1-7/8" wd x 1" thk o/a; grip formed on body; mts by two body holes; extended formed arm with csk hole	Provides means for lifting reperforator		N17-T-350010-792	CTT	97297	97297	H-978	7	0	0
H-979	Same as H-699	Secures H-978 to A-820									
H-980	SCREW, machine: slot drive; hex H; steel, nickel pl; #10-32 thd; approx 13/32" lg o/a; head 5/16" across flats x 3/32" lg	Secures H-978 to A-820		N17-T-350015-640	CTT	121575	121575	H-980	7	0	0
H-981	PLATE, retainer: steel, nickel pl; approx 2" lg x 3/4" h x 0.065" thk material; mts by elongated hole one end and elongated cutout other end; rectangular shape, irregularly cut out, one side half open	Secures 0-1004 to A-820		N17-T-350004-759	CTT	117387	117387	H-981	7	0	0
H-982	Same as H-320	Secures 0-1004 to A-820									

TABLE 8-4. COMBINED PARTS AND SPARE PARTS LIST

PARTS									EQUIPMENT SPARE PARTS	
SYMBOL DESIG.	NAME OF PART AND DESCRIPTION	FUNCTION	JAN OR NAVY TYPE DESIG.	SIGNAL CORPS STANDARD NAVY, AIR FORCE STOCK NO.	MANUFACTURERS CODE	MANUFACTURERS DESIG.	TELETYPE PART NO.	ALL SYMBOL DESIGNATIONS INVOLVED	TOTAL NO. PER EQUIP.	BOX	QUAN
H-983	Same as H-302	Secures 0-1004 to A-820									
H-984	Same as H-977	Secures 0-1004 to A-820									
H-985	Same as H-602	Secures main shaft gear to 0-1010									
H-986	Same as H-302	Secures main shaft gear to 0-1010									
H-987	SCREW, machine: slot drive; Fil H; steel, nickel pl; #6-40 thd; approx 5/16" lg o/a; 1/4" lg threaded portion; head 1/16" thk x 1/4" diam	Secures main shaft gear to 0-1010		N17-T-350006-753 1730-481854000	CTT	8543	8543	H-987,H-1029 H-1302,H-1307 H-1443,H-1477 H-1618,H-1646 H-1649,H-1651 H-1655,H-1749 H-1756,H-1775 H-1904,H-1909 H-1911,H-1913	202	1	58
H-989	WASHER, lock: steel; round, 17/32" ID, 3/4" OD, 1/16" thk; split-ring type	Secures 0-1013 to 0-1010		N17-T-350007-664	CTT	72565	72565	H-989	7	0	0
H-990	NUT, hexagon: steel, nickel pl; 1/2"-32; 1/8" thk; 5/8" across flats	Secures 0-1013 to 0-1010		N17-T-350006-194	CTT	7415	7415	H-990	7	0	0
H-991	WASHER, flat: steel, nickel pl; round, 9/16" OD x 5/16" ID x 0.035" thk o/a	Provides clearance between H-990 and 0-1014		N17-T-350007-668	CTT	72579	72579	H-991	7	0	0
H-992	Same as H-469	Secures 0-1014 to 0-1010									
H-993	Same as H-469	Secures 0-1014 to 0-1010									
H-994	NUT, slotted, hexagon: steel; nickel pl; spanner type, 1/8" one slot; OD 1/2"-32 thd, ID 5/16"-32 thd, class 3 fit, OD RH thd, ID LH thd, 1/2" across flats, approx 3/8" lg o/a	Secures main shaft clutch assembly to 0-1010		N17-T-350013-648	CTT	119540	119540	H-994	7	0	0
H-995	NUT, capstan: stainless steel; machined; split-ring locking type; notched circum type; ID tapped 1/2"-32; approx 7/8" OD, 1/16" thk	Provides means for adjusting the selector cam sleeve clutch		N17-T-350014-931	CTT	122974	122974	H-995	7	0	0
H-996	Same as H-302	Secures 0-1024 to 0-1022									
H-997	Same as H-851	Secures 0-1024 to 0-1022									

H-998	SCREW, machine: slot drive Fil H; iron, nickel pl; #2-56 thd; 3/8" lg o/a; 5/16" lg threaded portion; head 1/16" lg x 1/8" diam	Secures O-1037 to O-1038	N17-T-350013-163	CTT	1172	1172	H-998,H-1000 H-1398	77	1	75
H-999	Same as H-325	Secures O-1042 to O-1041								
H-1000	Same as H-998	Secures O-1043 to O-1038								
H-1001	Same as H-303	Secures O-1045, O-1046 and O-1047 to H-1004								
H-1002	Same as H-302	Secures O-1045, O-1046 and O-1047 to H-1004								
H-1003	WASHER, flat: steel, nickel pl; round, approx 5/16" OD x 5/32" ID x 0.060" thk o/a	Secures O-1045, O-1046 and O-1047 to H-1004	N17-T-350013-200	CTT	74722	74722	H-1003,H-1059	21	1	6
H-1004	STUD: steel, zinc and chromate pl; o/a 1-3/8" x 5/16" hex shoulder; one end threaded 3/16" lg w/#6-40 thd, opposite end threaded 7/32" lg w/#6-40 thd	Supports and provides pivot for O-1045	N17-T-350006-175	CTT	7386	7386	H-1004	7	0	0
H-1005	Same as H-731	Secures A-820 and O-1049 to A-821								
H-1006	Same as H-302	Secures A-820 and O-1049 to A-821								
H-1007	NUT, hexagon: steel, nickel pl; 1/4"-32; 3/32" thk o/a; approx 3/8" across flats	Secures O-1048 to A-820	N17-T-350005-740 1730-4813500O	CTT	3595	3595	H-1007	7	0	0
H-1008	SPACER: steel, nickel pl; approx 1/8" lg x 1/4" OD x 5/32" ID; mts by ID	Secures O-1051 and O-1052 to A-820	N17-T-350008-803	CTT	81638	81638	H-1008	7	0	0
H-1009	Same as H-302	Secures O-1051 and O-1052 to A-820								
H-1010	Same as H-303	Secures O-1051 and O-1052 to A-820								
H-1011	Same as H-302	Secures O-1050 to A-820								
H-1012	Same as H-658	Secures O-1050 to A-820								
H-1013	Same as H-316	Secures O-1053 and O-1054 to O-1052								
H-1014	Same as H-325	Secures O-1053 and O-1054 to O-1052								

TABLE 8-4. COMBINED PARTS AND SPARE PARTS LIST

PARTS									EQUIPMENT SPARE PARTS	
SYMBOL DESIG.	NAME OF PART AND DESCRIPTION	FUNCTION	JAN OR NAVY TYPE DESIG.	SIGNAL CORPS STANDARD NAVY, AIR FORCE STOCK NO.	MANUFACTURERS CODE	MANUFACTURERS DESIG.	TELETYPE PART NO.	ALL SYMBOL DESIGNATIONS INVOLVED	TOTAL NO. PER EQUIP.	BOX	QUAN
H-1015	WASHER, flat: steel, nickel pl; round, approx 1/8" ID x 1/4" OD x 1/32" thk	Secures O-1053 and O-1054 to O-1052		N17-T-350012-634 1730-044620470	CTT	125011	125011	H-1015,H-1024 H-1065,H-1132 H-1195,H-1230 H-1312,H-1318 H-1355,H-1409 H-1417,H-1422 H-1439,H-1442 H-1449,H-1572	140	1	84
H-1016	SCREW, machine: slot drive; Fil H; steel, nickel pl; #2-56 thd; approx 7/16" lg o/a; threaded portion 3/8" lg; 1/16" thk x 1/8" diam head	Secures O-1055 and O-1059 to A-821		N17-T-350001-126	CTT	125138	125138	H-1016	14	0	0
H-1017	PIN, dowel: steel; approx 3/16" lg x 1/16" diam o/a	Locates A-822 on A-821		N17-T-350001-205	CTT	125421	125421	H-1017	14	0	0
H-1018	SCREW, machine: slot drive; Fil H; steel, nickel pl; #2-56 thd; approx 5/16" lg o/a; 1/4" lg threaded portion; head 1/8" diam x 0.068" thk	Secures A-822 to A-824		N17-T-350005-763 1730-481468000	CTT	5740	5740	H-1018	14	0	0
H-1019	SCREW, machine: slot drive; FH; steel, nickel pl; #4-40 thd; approx 1/2" lg o/a; threaded portion 7/16" lg; head 1/16" lg x 3/8" diam	Secures O-1080 and O-1066 to O-1068		N17-T-350010-645	CTT	95971	95971	H-1019	7	0	0
H-1020	SCREW, machine: slot drive; hex H; steel, nickel pl; #4-40 thd; 9/32" lg; 3/16" lg threaded portion; head 3/32" thk, 3/16" across flats	Secures O-1067 to A-823		N17-T-350001-976	CTT	76167	76167	H-1020,H-1448	25	1	18
H-1021	Same as H-325	Secures O-1067 to A-823									
H-1022	SCREW, machine: slot drive; Fil H; steel, nickel pl; #4-40 thd; approx 3/8" lg o/a; 9/32" lg threaded portion; 3/16" diam x 1/16" thk head	Secures O-1070 to A-823		N17-T-350004-117 1730-485709068	CTT	102052	102052	H-1022,H-1193 H-1451	36	1	27
H-1023	Same as H-325	Secures O-1070 to A-823									
H-1024	Same as H-1015	Secures O-1070 to A-823									
H-1025	Same as H-818	Secures A-828 to A-823									
H-1026	Same as H-302	Secures A-828 to A-823									

H-1027	CUTTER, paper: steel, nickel pl; approx 1-11/16" lg x 5/8" wd x 1/2" thk o/a; mts by two body holes; slot behind cutting edge	Provides cutting edge for tape		N17-T-350008-800	CTT	81603	81603	H-1027	7	0	0
H-1028	Same as H-302	Secures H-1027 to A-823									
H-1029	Same as H-987	Secures H-1027 to A-823									
H-1030	POST, spring: steel, nickel pl; approx 1-1/16" lg x 7/32" diam o/a; mts by one end threaded 1/4" lg w/#4-40 thd; slot drive, two grooves in body	Anchors 0-1095		N17-T-350010-601 1730-485546664	CTT	95448	95448	H-1030	7	0	0
H-1031	Same as H-402	Secures A-820 to A-823									
H-1032	SCREW, machine: slot drive; Fil H; steel, nickel pl; #10-32 thd; approx 21/32" lg o/a; threaded portion 1/2" lg; head 5/32" lg x 5/16" diam	Secures A-820 to A-823		N17-T-350002-279	CTT	80757	80757	H-1032	7	0	0
H-1033	PLATE, lock: steel, nickel pl; one end formed 90°, other end curved and formed 30°; approx 13/32" lg x 5/16" wd x 9/64" h o/a; mts by ctr body hole	Secures 0-1071 to 0-1069		N17-T-350002-783	CTT	86919	86919	H-1033	7	0	0
H-1034	NUT, hexagon: steel, nickel pl; 5/32"-40; 5/32" thk; 1/4" across flats	Secures 0-1071 to 0-1069		N17-T-350005-741	CTT	3597	3597	H-1034	7	0	0
H-1035	SCREW, adjustment: steel, nickel pl, eccentric shank	Secures 0-1073 and 0-1074 to 0-1075		N17-T-350016-753	CTT	209459 WU	209459WU	H-1035	4	0	0
H-1036	SCREW, pilot: slot drive; special head; steel, nickel pl; 1/4"-32; approx 7/8" lg o/a; threaded portion 1/2" lg; head 1/16" lg x 13/64" diam	Supports and provides pivot for 0-1075		N17-T-350010-621	CTT	95487	95487	H-1036,H-1047	14	1	12
H-1037	Same as H-972	Secures H-1036 to A-823									
H-1038	Same as H-303	Secures 0-1072 to 0-1075									
H-1039	Same as H-302	Secures 0-1072 to 0-1075									
H-1040	STUD: steel, piston finish; approx 5/8" lg x 3/16" diam o/a; shank end threaded 3/16" lg w/#6-40 thd; head 3/8" lg x 3/16" diam with slot	Secures 0-1072 to 0-1075		N17-T-350003-453	CTT	95459	95459	H-1040	7	0	0
H-1041	Same as H-972	Secures H-1047 to A-823									
H-1042	NUT: hexagon; steel, nickel pl; 1/4"-20; 3/16" thk; 7/16" wd across flats	Secures 0-1073 to 0-1075		6L3504-20-7S2 N17-T-350016-287	CTT	92146	92146	H-1042	4	0	0

TABLE 8-4. COMBINED PARTS AND SPARE PARTS LIST

PARTS									EQUIPMENT SPARE PARTS	
SYMBOL DESIG.	NAME OF PART AND DESCRIPTION	FUNCTION	JAN OR NAVY TYPE DESIG.	SIGNAL CORPS STANDARD NAVY, AIR FORCE STOCK NO.	MANUFACTURERS CODE	MANUFACTURERS DESIG.	TELETYPE PART NO.	ALL SYMBOL DESIGNATIONS INVOLVED	TOTAL NO. PER EQUIP.	BOX	QUAN
H-1043	WASHER, lock: steel, cad pl; round, 1/4" ID x 15/32" OD x 0.025" thk; shake proof type, straight internal teeth	Secures 0-1073 to 0-1075		N17-T-350013-247	CAX0	1214	93108	H-1043	4	0	0
H-1044	Same as H-302	Secures A-821 to A-823									
H-1045	Same as H-818	Secures A-821 to A-823									
H-1046	Same as H-302	Secures 0-1068 to A-823									
H-1047	Same as H-1036	Supports and provides pivot for 0-1075									
H-1048	Same as H-972	Secures H-1050 to A-823									
H-1049	SCREW, machine: slot drive; Fil H; steel, nickel pl; #6-40 thd; approx 9/16" lg o/a; 7/16" lg threaded portion; head 1/8" thk x 7/32" diam	Secures 0-1068 to A-823		N17-T-350013-160 1730-481162000	CTT	1169	1169	H-1049,H-1420 H-1508,H-1708	28	1	18
H-1050	SCREW, pilot: slot drive; headless; steel, nickel pl; 1/4"-32; approx 7/8" lg o/a; threaded portion 11/16" lg; pilot 1/8" lg x 9/64" diam	Supports and provides pivot for 0-1091		N17-T-350010-596	CTT	95443	95443	H-1050	7	0	0
H-1051	POST, spring: steel, bright zinc and chromate; approx 15/32" lg x 5/32" OD o/a; #4-40 thd 1/8" lg; slot between head and body	Anchors 0-1076 to A-823		N17-T-350001-802	CTT	74554	74554	H-1051,H-1317 H-1358	25	0	0
H-1052	Same as H-307	Secures 0-1077, 0-1018 and 0-1079 to A-823									
H-1053	Same as H-302	Secures 0-1077, 0-1078 and 0-1079 to A-823									
H-1054	Same as H-977	Secures 0-1077, 0-1078 and 0-1029 to A-823									
H-1055	SCREW, machine: slot drive; FH; steel, zinc pl, chromate finish; #4-40 thd; approx 5/16" lg o/a; threaded portion 1/4" lg; head 1/16" x 7/32" diam	Secures 0-1080 to A-823		N17-T-350003-320	CTT	93191	93191	H-1055	7	0	0
H-1056	Same as H-320	Secures 0-1081 and 0-1083 to 0-1075									

H-1057	Same as H-302	Secures 0-1081 and 0-1083 to 0-1075								
H-1058	SCREW, machine: slot drive; Fil H; steel, nickel pl; #6-40 thd; approx 5/8" lg o/a; 1/2" lg threaded portion; head 1/8" thk x 7/32" diam o/a	Secures 0-1081 and 0-1083 to 0-1075	N17-T-350013-115	CTT	1269	1269	H-1058,H-1300 H-1373,H-1596 H-1737,H-1745	46	1	21
H-1059	Same as H-1003	Secures 0-1083 to 0-1082 and provides means for adjusting 0-1091								
H-1060	Same as H-302	Secures 0-1083 to 0-1082 and provides means for adjusting 0-1091								
H-1061	Same as H-602	Secures 0-1083 to 0-1082 and provides means for adjusting 0-1091								
H-1062	STUD: steel, nickel pl; 1-1/4" lg x 5/16" across flats; one end threaded 1/4" lg w/#6-40 thd, other end threaded 7/32" lg w/#4-40 thd	Supports and provides pivot for 0-1084 through 0-1088	N17-T-350010-588	CTT	95427	95427	H-1062	7	0	0
H-1063	Same as H-316	Secures 0-1084 through 0-1088 to H-1062								
H-1064	Same as H-325	Secures 0-1084 through 0-1083 to H-1062								
H-1065	Same as H-1015	Secures 0-1084 through 0-1088 to H-1062								
H-1066	SCREW, machine: slot drive; Fil H; steel, nickel pl; #4-40 thd; approx 11/32" lg o/a; 1/4" lg threaded portion; head 3/32" thk x 3/16" diam	Secures A-824 and A-825 to A-823	N17-T-350013-154 1730-481152000	CTT	1162	1162	H-1066,H-1314 H-1359,H-1411 H-1423,H-1437 H-1440,H-1568 H-1570,H-1636 H-1797	101	1	78
H-1067	Same as H-325	Secures A-824 and A-825 to A-823								
H-1068	SCREW, machine: slot drive; Fil H; iron, nickel pl; #2-56 thd; approx 3/16" lg; threaded portion 1/8" lg; 1/16" thk head, 1/8" diam head	Secures A-826 to 0-1091	N17-T-350012-628	CTT	125112	125112	H-1068	14	1	6
H-1069	Same as H-667	Secures H-1071 to A-823								
H-1070	Same as H-972	Secures H-1071 to A-823								
H-1071	STUD: steel, nickel pl; 15/16" lg x 7/16" across flats; one end threaded 11/32" lg w/1/4"-32 thd, 1/8" diam projection on other end	Supports and provides pivot for 0-1091	N17-T-350010-595	CTT	95442	95442	H-1071	7	0	0

TABLE 8-4. COMBINED PARTS AND SPARE PARTS LIST

PARTS										EQUIPMENT SPARE PARTS	
SYMBOL DESIG.	NAME OF PART AND DESCRIPTION	FUNCTION	JAN OR NAVY TYPE DESIG.	SIGNAL CORPS STANDARD NAVY, AIR FORCE STOCK NO.	MANUFACTURERS CODE	MANUFACTURERS DESIG.	TELETYPE PART NO.	ALL SYMBOL DESIGNATIONS INVOLVED	TOTAL NO. PER EQUIP.	BOX	QUAN
H-1072	SCREW, machine: slot drive; Fil H; steel, nickel pl; #6-40 thd; approx 3/8" lg o/a; 1/4" lg threaded portion; head 1/8" thk x 7/32" diam o/a	Secures 0-1082 to 0-1091		N17-T-350012-640 1730-481150000	CTT	1161	1161	H-1072,H-1203 H-1433,H-1686	44	1	30
H-1073	Same as H-302	Secures 0-1082 to 0-1091									
H-1074	Same as H-302	Secures 0-1093 to 0-1091									
H-1075	Same as H-419	Secures 0-1093 to 0-1091									
H-1076	Same as H-303	Secures H-1077 to 0-1091									
H-1077	SCREW, pilot: wrench or slot drive; hex H; steel, nickel pl; #6-40 thd; approx 27/32" lg o/a; 5/16" lg threaded portion; head 3/32" thk x 3/16" across flats; 7/16" lg x 3/32" diam pilot	Provides adjustment for travel of 0-1091		N17-T-350010-628	CTT	95499	95499	H-1077	7	0	0
H-1078	Same as H-301	Secures A-827 to A-823 and provides means for adjusting height of A-827									
H-1079	Same as H-303	Secures code bar bell cranks to H-1082									
H-1080	Same as H-302	Secures code bar bell cranks to H-1082									
H-1081	Same as H-320	Secures code bar bell cranks to H-1082									
H-1082	STUD: steel, nickel pl; approx 1-1/32" lg x 5/16" across flats o/a, shoulder 3/32" lg; one end threaded 1/4" lg w/#6-40 thd, opposite end threaded 9/32" lg w/#6-40 thd	Supports and provides pivot for code bar bell cranks		N17-T-350010-753	CTT	96889	96889	H-1082	7	0	0
H-1083	STUD: steel, nickel pl; approx 13/16" lg x 1/4" across flats o/a, shank 31/64" lg x 3/16" diam; one end threaded 15/64" lg w/#6-40 thd	Positions code bar bell crank separators		N17-T-350013-655	CTT	6999	6999	H-1083	7	0	0
H-1084	Same as H-320	Secures H-1082 to A-828									
H-1085	Same as H-302	Secures H-1082 to A-828									

H-1086	Same as H-303	Secures H-1082 to A-828									
H-1087	NUT, rectangular: steel, nickel pl; #6-40 thd; 1/8" thk; 1/4" wd x 3/8" lg; round shank w/2 flats	Secures H-1090 to A-828	N17-T-350010-592 1730-042724679	CTT	95438	95438	H-1087	7	O	O
H-1088	Same as H-442	Secures H-1090 to A-828								
H-1089	WASHER, lock: steel, nickel pl; round, approx 5/16" OD x 5/32" ID x 0.018" thk o/a; shake proof type, straight external teeth	Secures H-1090 to A-828	N17-T-350014-922	CTT	107116	107116	H-1089	7	O	O
H-1090	SCREW, pilot: slot drive; hex H; steel, nickel pl; #6-40 thd; approx 27/32" lg o/a; threaded portion 3/16" lg; 3/32" thk head, 1/4" across flats; pilot approx 9/16" lg x 3/32" diam	Supports and provides pivot for O-1104 through O-1108	N17-T-350008-192	CTT	74399	74399	H-1090,H-1112	14	O	O
H-1091	Same as H-302	Secures H-1083 to A-828								
H-1092	Same as H-303	Secures H-1083 to A-828								
H-1093	Same as H-402	Secures A-823 to A-805								
H-1094	Same as H-841	Secures A-823 to A-805								
H-1095	STUD: steel, nickel pl; 15/16" lg x 5/16" across flats; one end threaded 1/4" lg w/#6-40 thd, other end threaded 7/32" lg w/#4-40 thd	Supports and provides pivot for O-1109 through O-1113	N17-T-350010-585	CTT	95418	95418	H-1095	7	O	O
H-1096	Same as H-325	Secures O-1109 through O-1113 to H-1095								
H-1097	Same as H-316	Secures O-1109 through O-1113 to H-1095								
H-1098	Same as H-303	Secures H-1100, A-829 and selector levers to H-1108								
H-1099	Same as H-302	Secures H-1100, A-829 and selector levers to H-1108								
H-1100	ANCHOR, spring: steel, nickel pl; rounded one end, other end formed and rounded; approx 1-1/4" lg x 9/32" wd x 15/64" h o/a; mts by body hole in wd end; csk hole in formed end	Anchors O-1116	N17-T-350009-860 1730-044281008	CTT	90508	90508	H-1100	7	O	O
H-1101	Same as H-303	Secures separator plates and spacers to H-1107								

TABLE 8-4. COMBINED PARTS AND SPARE PARTS LIST

PARTS										EQUIPMENT SPARE PARTS	
SYMBOL DESIG.	NAME OF PART AND DESCRIPTION	FUNCTION	JAN OR NAVY TYPE DESIG.	SIGNAL CORPS STANDARD NAVY, AIR FORCE STOCK NO.	MANUFACTURERS CODE	MANUFACTURERS DESIG.	TELETYPE PART NO.	ALL SYMBOL DESIGNATIONS INVOLVED	TOTAL NO. PER EQUIP.	BOX	QUAN
H-1102	Same as H-302	Secures separator plates and spacers to H-1107									
H-1103	SCREW, machine: slot or wrench drive; hex H; steel, nickel pl; #6-40 thd; approx 29/32" lg o/a; threaded portion 1/2" lg; head 3/32" lg x 1/4" across flats	Secures 0-1132 and H-1106 to A-830		N17-T-350004-937	CTT	90511	90511	H-1103	7	0	0
H-1104	Same as H-302	Secures 0-1132 and H-1106 to A-830									
H-1105	Same as H-442	Secures 0-1132 and H-1106 to A-830									
H-1106	POST, detent: steel, nickel pl; approx 5/8" lg x 3/8" across hex flats; mts by eccentric ID	Supports and provides pivot for 0-1132		N17-T-350002-980	CTT	90069	90069	H-1106	7	0	0
H-1107	STUD: steel, nickel pl; 15/16" lg x 1/4" across hex flats; one end threaded 9/32" lg w/#6-40 thd, other end threaded 1/8" lg w/#6-40 thd	Supports separator plates and spacers		N17-T-350008-541	CTT	78164	78164	H-1107	35	0	0
H-1108	STUD: steel, nickel pl; 57/64" lg x 1/4" across hex flats; one end threaded 1/4" lg w/#6-40 thd, plain shank other end	Supports selector levers and separator plates		N17-T-350004-873	CTT	78163	78163	H-1108	21	0	0
H-1109	Same as H-974	Supports and provides pivot for 0-1001									
H-1110	Same as H-972	Secures H-1109 to A-830									
H-1111	Same as H-302	Secures H-1112 to A-830									
H-1112	Same as H-1090	Supports and provides pivot for "T" levers									
H-1113	Same as H-302	Secures H-1108 to A-830									
H-1114	Same as H-303	Secures H-1108 to A-830									
H-1115	SCREW, machine: slot drive; flat Fil H; steel, nickel pl; #10-32 thd; approx 27/64" lg o/a; threaded portion 9/64" lg; head 3/32" lg x 7/16" diam; shoulder 3/16" lg x 1/4" diam	Secures and provides pivot for 0-1133		N17-T-350002-134 1730-043602158	CTT	78597	78597	H-1115	7	0	0

H-1116	SCREW, thumb: knurled round head; steel, nickel pl; #6-40 thd; 19/32" lg; threaded portion 1/4" lg; flat points; head 5/32" lg x 9/16" diam; shoulder 9/32" lg x 9/32" diam; tapered shoulder 5/32" lg	Locks O-1133 and O-1140 in position	N17-T-350013-140	CTT	1073	1073	H-1116	7	1	6
H-1117	WASHER, spring: steel, round, approx 1/2" OD x 1/4" ID x 0.012" thk; curved on 3/8" radius	Provides friction between H-1115 and O-1133	N17-T-350005-802 1730-48393000	CTT	78596	78596	H-1117	7	0	0
H-1118	Same as H-672	Secures O-1134 to N-800 or N-801								
H-1119	Same as H-302	Secures O-1134 to N-800 or N-801								
H-1120	Same as H-320	Secures O-1134 to N-800 or N-801								
H-1121	SCREW, machine: slot drive; Fil H; steel, nickel pl; #6-40 thd; 7/16" lg o/a; threaded portion 1/4" lg; head 3/32" lg x 1/4" diam; shoulder 3/32" lg x 3/16" diam	Secures N-800 or N-801 to A-830	N17-T-350005-509	CTT	1030	1030	H-1121,H-1128	14	1	6
H-1122	Same as H-486	Secures N-800 or N-801 to A-830								
H-1123	Same as H-303	Secures O-1141 and O-1143 to O-1140								
H-1124	Same as H-325	Secures O-1138 to N-800 or O-1139 to N-801								
H-1125	Same as H-817	Secures O-1138 to N-800 or O-1139 to N-801								
H-1126	Same as H-816	Secures H-1137 to O-1140								
H-1127	Same as H-325	Secures H-1137 to O-1140								
H-1128	Same as H-1121	Secures N-800 or N-801, O-1137, O-1136 to A-830								
H-1129	Same as H-486	Secures N-800 or N-801, O-1137, O-1136 to A-830								
H-1130	Same as H-315	Secures O-1135 to O-1136								
H-1131	Same as H-325	Secures O-1135 to O-1136								
H-1132	Same as H-1015	Provides a seat for O-1135								
H-1133	Same as H-803	Secures O-1143 and O-1141 to O-1140								

TABLE 8-4. COMBINED PARTS AND SPARE PARTS LIST

PARTS									EQUIPMENT SPARE PARTS	
SYMBOL DESIG.	NAME OF PART AND DESCRIPTION	FUNCTION	JAN OR NAVY TYPE DESIG.	SIGNAL CORPS STANDARD NAVY, AIR FORCE STOCK NO.	MANUFACTURERS CODE	MANUFACTURERS DESIG.	TELETYPE PART NO.	ALL SYMBOL DESIGNATIONS INVOLVED	TOTAL NO. PER EQUIP.	BOX	QUAN
H-1134	SCREW, set: slot drive; headless; steel, nickel pl; #6-40 thd; 9/32" lg o/a; oval point	Secures O-1144 to A-830		N17-T-350007-663 1730-043835034	CTT	72555	72555	H-1134	14	0	0
H-1135	Same as H-325	Secures O-1147 or O-1148 to O-1140									
H-1136	Same as H-817	Secures O-1147 or O-1148 to O-1140									
H-1137	STUD: steel, nickel pl; approx 9/16" lg o/a, shoulder 9/32" lg x 1/4" diam; shank threaded 3/16" lg; #4-40 thd; shank 1/32" off center	Provides adjustable stop for O-1143		N17-T-350001-473	CTT	6966	6966	H-1137	7	0	0
H-1138	NUT, hexagon: steel, nickel pl; 3/16"-40; 3/32" thk o/a; approx 5/16" across flats	Secures H-1139 to A-831		N17-T-350012-487 1730-481460000	CTT	5475	5475	H-1138,H-1140 H-1167	21	0	0
H-1139	SCREW, pivot: slot drive; headless; steel, nickel pl; 3/16"-40; approx 15/32" lg o/a; threaded portion 1/2" lg; cone point	Supports and provides pivot for O-1152		N17-T-350012-555	CTT	90515	90515	H-1139,H-1166	14	1	6
H-1140	Same as H-1138	Secures H-1141 to A-831									
H-1141	SCREW, pivot: slot or wrench drive; hex H; steel, nickel pl; 3/16"-40; approx 19/32" lg o/a; threaded portion 13/32" lg; head 3/32" lg x 5/16" across flats; cone point	Supports and provides pivot for O-1152		N17-T-350012-554	CTT	90514	90514	H-1141,H-1165	14	1	6
H-1142	Same as H-627	Secures A-830 to A-820 and A-811									
H-1143	Same as H-302	Secures A-830 to A-820 and A-811									
H-1144	Same as H-302	Secures H-1155 to A-830									
H-1145	Same as H-303	Secures H-1155 to A-830									
H-1146	Same as H-325	Secures O-808 to A-802									
H-1147	Same as H-844	Positions one end of A-811 on A-805									
H-1149	Same as H-693	Secures A-833 to A-830									

| | | |

TABLE 8-4. COMBINED PARTS AND SPARE PARTS LIST

PARTS									EQUIPMENT SPARE PARTS	
SYMBOL DESIG.	NAME OF PART AND DESCRIPTION	FUNCTION	JAN OR NAVY TYPE DESIG.	SIGNAL CORPS STANDARD NAVY, AIR FORCE STOCK NO.	MANUFACTURERS CODE	MANUFACTURERS DESIG.	TELETYPE PART NO.	ALL SYMBOL DESIGNATIONS INVOLVED	TOTAL QTY. PER EQUIP.	BOX	QUAN
H-1169	SCREW, adjustment: steel, nickel pl	Provides adjustment for A-833		N17-T-350009-846	CTT	90265	90265	H-1169	7	0	0
H-1170	Same as H-741	Secures H-1169 to A-833									
H-1171	Same as H-1153	Secures 0-1158 to A-833									
H-1172	Same as H-302	Secures 0-1158 to A-833									
H-1173	Same as H-650	Secures 0-1158 to A-833									
H-1174	Same as H-915	Secures 0-1159 to 0-1160									
H-1175	Same as H-303	Secures 0-1159 to 0-1160									
H-1176	STUD: steel, nickel pl; 11/16" lg x 3/8" across flats, shoulder 3/32" lg x 1/4" diam; shank threaded 5/16" lg w/#6-40 thd; eccentric shank, drive slot at end	Secures 0-1160 to A-834			CTT	205671WU	205671WU	H-1176	4	1	3
H-1177	SCREW, machine: slot drive; Fil H; steel, nickel pl; #6-40 thd; approx 7/8" lg o/a; 3/4" lg threaded portion; head 1/8" thk x 7/32" diam	Secures 0-1165 to 0-1168		N17-T-350005-714	CTT	1226	1226	H-1177,H-1180 H-1599,H-1743	14	1	12
H-1178	Same as H-302	Secures 0-1165 to 0-1168									
H-1179	WASHER, flat: steel, round, 5/16" ID, 11/16" OD, 1/32" thk	Takes thrust of 0-1165		N17-T-350016-284	CTT	12098WU	12098WU	W-1179	4	1	6
H-1180	Same as H-1177	Secures 0-1166 to 0-1168									
H-1181	Same as H-302	Secures 0-1166 to 0-1168									
H-1182	WASHER, lock: steel, round, approx 11/32" OD x 3/16" ID x 1/16" thk o/a; split-ring type	Secures H-1165 to A-833		N17-T-350005-753	CTT	3639	3639	H-1182	20	0	0
H-1183	Same as H-841	Secures A-834 to A-805									

H-1184	STUD: steel, nickel pl; approx 23/32" lg x 1/4" wd across flats o/a; one end threaded 1/8" lg w/#6-40 thd, opposite end 13/32" lg x 3/32" diam grooved, hex shoulder 1/8" wd	Anchors 0-1161	4T116484 N17-T-350016-306	CTT	116484	116484	H-1184	4	0	0
H-1185	Same as H-410	Secures H-1188 to A-834								
H-1186	Same as H-403	Secures H-1188 to A-834								
H-1187	Same as H-303	Secures 0-1160 to A-834								
H-1188	STUD, bearing: steel, nickel pl; approx 1-7/8" lg x 3/8" wd across flats; one end threaded 3/8" lg w/#10-32 thd, opposite end threaded 1/4" lg w/#10-32 thd; hex shoulder 3/32" lg	Supports and provides pivot for 0-1167 and 0-1170	N17-T-350016-251	CTT	129236	129236	H-1188	4	0	0
H-1189	Same as H-486	Secures 0-1169 to 0-1168								
H-1190	Same as H-410	Secures 0-1169 to 0-1168								
H-1191	NUT, hexagon: steel, nickel pl; #10-32 thd; 1/8" thk; 5/16" wd across flats hexagonal section 3/32" thk	Secures 0-1170 and 0-1167 to H-1188	6L3110-32-551 N17-T-350016-295	CTT	129235	129235	H-1191	4	0	0
H-1192	Same as H-410	Secures 0-1170 and 0-1167 to H-1188								
H-1193	Same as H-1022	Secures A-835 to 0-1172								
H-1194	Same as H-325	Secures A-835 to 0-1172								
H-1195	Same as H-1015	Secures A-835 to 0-1172								
H-1196	SCREW, machine: slot wrench drive; hex H; steel, nickel pl; #4-40 thd; approx 19/32" lg o/a; threaded portion 1/2" lg; head 3/32" thk x 3/16" across flats	Provides means for adjusting 0-1174	N17-T-350004-693	CTT	112620	112620	H-1196	4	0	0
H-1197	Same as H-816	Secures H-1196 to A-835								
H-1198	SCREW, machine: slot drive; FH H; steel, nickel pl; #2-56 thd; 11/16" lg o/a; threaded portion 5/8" lg; head 1/16" lg x 1/8" diam	Provides means for adjusting 0-1174	N17-T-350005-710	CTT	1210	1210	H-1198	4	-1	9
H-1199	NUT, hexagon: steel, nickel pl; #2-56 thd; approx 1/16" thk o/a; 3/16" across flats	Secures H-1188 to B-801	N17-T-350004-695 1730-480706000	CTT	112627	112627	H-1199,H-1201 H-1399,H-1580 H-1794	77	1	69

TABLE 8-4. COMBINED PARTS AND SPARE PARTS LIST

PARTS

SYMBOL DESIG.	NAME OF PART AND DESCRIPTION	FUNCTION	JAN OR NAVY TYPE DESIG.	SIGNAL CORPS STANDARD NAVY, AIR FORCE STOCK NO.	MANUFACTURERS CODE	MANUFACTURERS DESIG.	TELETYPE PART NO.	ALL SYMBOL DESIGNATIONS INVOLVED	TOTAL NO. PER EQUIP.	EQUIPMENT SPARE PARTS BOX	EQUIPMENT SPARE PARTS QUAN
H-1200	STUD: steel, approx 27/64" lg x 5/32" diam o/a; one end threaded 3/16" lg w/#2-56 thd, opposite end tapered 1/32" lg	Rides 0-1170 to operate 0-1174		N17-T-350016-254	CTT	129241	129241	H-1200	4	1	1
H-1201	Same as H-1199	Secures H-1200 to 0-1174									
H-1202	SCREW, shoulder: flat top bind H; steel, nickel pl; approx 15/32" lg x 1/4" diam o/a; #4-40 thd; approx 7/64" lg, shoulder 5/32" diam x 1/4" lg	Secures 0-1174 and 0-1173 to E-801		N17-T-350001-155	CTT	112624	112624	H-1202	4	1	9
H-1203	Same as H-1072	Secures A-836 to A-834									
H-1204	Same as H-302	Secures A-836 to A-834									
H-1205	WASHER, lock: steel, round, approx 9/32" OD x 5/32" ID x 1/32" thk o/a; split-ring type	Secures 0-1172, E-800 and L-801 to A-834		N17-T-350013-124 1730-481398000	CTT	3646	3646	H-1205,H-1689 H-1691	19	1	15
H-1206	SCREW, machine: slot drive; Fil H; iron, nickel pl; #8-32 thd; approx 3/4" lg threaded portion 5/8" lg; head 1/8" lg x 17/64" diam	Secures 0-1172, E-800 and L-801 to A-834		N17-T-350013-131	CTT	1007	1007	H-1206	4	0	0
H-1207	Same as H-410	Secures 0-1176 and H-1217 to A-834									
H-1208	Same as H-602	Secures A-837 to A-834									
H-1209	Same as H-302	Secures A-837 to A-834									
H-1210	Same as H-320	Secures A-837 to A-834									
H-1211	SCREW, machine: slot drive; Fil H; steel, nickel pl; #2-56 thd; approx 1/2" lg o/a; 7/16" lg threaded portion; head 1/16" thk x 1/8" diam	Secures S-800 and E-802 to A-837		N17-T-350005-535 1730-043601250	CTT	1178	1178	H-1211,H-1222	16	0	0
H-1212	WASHER, lock: steel, round, 3/32" ID, 13/64" OD, 1/32" thk; split-ring type	Secures S-800 and E-802 to A-837		N17-T-350005-730	CTT	2422	2422	H-1212,H-1223 H-1697,H-1795	22	0	0
H-1213	Same as H-741	Secures H-1218 to 0-1179									
H-1214	Same as H-303	Secures H-1216 to 0-1179									

H-1215	Same as H-302	Secures H-1216 to 0-1179									
H-1216	STUD: steel, approx 1/2" lg x 5/16" diam o/a; one end threaded 3/16" lg w/#6-40 thd, opposite end 15/64" lg x 3/16" diam w/shoulder 1/16" thk	Disengages and engages 0-1163	6L31146-8-4-WU N17-T-350016-367 1730-044209382	CTT	12214WU	12214WU	H-1216	4	1	3	
H-1217	STUD: steel, nickel pl; approx 1-9/16" lg o/a x 5/16" across flats, tapered shoulder 13/32" lg; one end threaded 1/4" lg w/#10-32 thd; shank 5/8" lg x 3/16" diam, w/slot behind tip	Supports and provides pivot for 0-1179	N17-T-350016-722	CTT	129237	129237	H-1217	4	0	0	
H-1218	POST, spring: steel, nickel pl; approx 13/32" lg x 3/16" diam o/a; mts by #6-40 thd 13/64" lg one end, opposite end spade 5/32" lg w/5/64" csk hole	Anchors 0-1177	N17-T-350016-252	CTT	101994	101994	H-1218	4	0	0	
H-1219	Same as H-302	Secures H-1218 to 0-1179									
H-1220	SCREW, machine: slot drive; Fil H; steel, nickel pl; #6-40 thd; approx 7/16" lg o/a; 3/8" lg threaded portion; head 1/16" thk x 7/32" diam	Secures A-838 to A-834	6L6640-6.86 N17-T-350013-709 1730-043601412	CTT	151346	151346	H-1220,H-1231 H-1234,H-1901 H-1906	26	0	0	
H-1221	Same as H-302	Secures A-838 to A-834									
H-1222	Same as H-1211	Secures S-801 and E-803 to A-839									
H-1223	Same as H-1212	Secures S-801 and E-803 to A-839									
H-1224	Same as H-602	Secures A-839 to A-834									
H-1225	Same as H-302	Secures A-839 to A-834									
H-1226	Same as H-320	Secures A-839 to A-834									
H-1227	RING, retainer: steel, nickel pl; "C" shaped w/2 ctr cutouts; approx 11/32" OD x 5/32" ID x 0.025" thk o/a	Secures 0-1179 to H-1217	N17-T-350013-800 1730-041512035	WKI	5133-18	119652	H-1227	4	1	4	
H-1228	SCREW, machine: slot drive; Fil H; steel, nickel pl; #4-40 thd; approx 9/32" lg o/a; threaded portion 3/16" lg; head 3/32" thk x 11/64" diam	Secures E-804 to 0-1179	G43-S-15519 1730-043602188	CTT	104828	104828	H-1228	8	1	6	
H-1229	Same as H-325	Secures E-804 to 0-1179									
H-1230	Same as H-1015	Secures E-804 to 0-1179									
H-1231	Same as H-1220	Secures A-840 to A-834									

TABLE 8-4. COMBINED PARTS AND SPARE PARTS LIST

PARTS										EQUIPMENT SPARE PARTS	
SYMBOL DESIG.	NAME OF PART AND DESCRIPTION	FUNCTION	JAN OR NAVY TYPE DESIG.	SIGNAL CORPS STANDARD NAVY, AIR FORCE STOCK NO.	MANUFACTURERS CODE	MANUFACTURERS DESIG.	TELETYPE PART NO.	ALL SYMBOL DESIGNATIONS INVOLVED	TOTAL NO. PER EQUIP.	BOX	QUAN
H-1232	Same as H-302	Secures A-840 to A-834									
H-1233	Same as H-302	Secures L-802 or L-803 to A-840									
H-1234	Same as H-1220	Secures L-802 or L-803 to A-840									
H-1235	Same as H-602	Secures O-1181 to O-923									
H-1236	Same as H-302	Secures O-1181 to O-923									
H-1237	PIN, dowel: steel; approx 1/4" lg x 1/16" diam o/a	Locates O-1059 on A-821		N17-T-350001-206	CTT	125422	125422	H-1237	14	0	0
H-1238	Same as H-320	Provides clearance between O-923 and O-1181									
H-1239	Same as H-844	Positions one end of O-810 on A-805									
H-1240	Same as H-839	Supports center of O-810									
H-1241	Same as H-486	Secures H-1240 to A-805									
H-1242	Same as H-402	Secures H-1240 to A-805									
H-1243	Same as H-841	Secures H-1240 to A-805									
H-1244	Same as H-602	Secures H-883 and O-931 to O-927									
H-1245	Same as H-302	Secures H-883 and O-931 to O-927									
H-1246	WASHER, flat: steel, nickel pl; round, approx 3/16" OD x 3/32" ID x 0.020" thk o/a	Secures O-1151 to O-1152		N17-T-350013-188 1730-482582000	CTT	71073	71073	H-1246	7	0	0
H-1247	Same as H-841	Secures H-844 and H-843 to A-805									
H-1248	Same as H-302	Secures A-801 to A-805									
H-1249	Same as H-303	Secures A-801 to A-805									
H-1250	Same as H-844	Locates one end of A-811 on A-805									

H-1251	Same as H-320	Secures H-1250 to A-805								
H-1252	Same as H-302	Secures H-1250 to A-805								
H-1253	SCREW, machine: key drive; key slot head; steel, nickel pl; #6-40 thd; approx 19/64" lg; threaded portion 7/32" lg; head 5/64" thk x 5/16" diam	Secures H-1250 to A-805	N17-T-350016-594	CTT	124144	124144	H-1253	7	0	0
H-1254	Same as H-486	Secures A-811 to A-805								
H-1255	Same as H-402	Secures A-811 to A-805								
H-1256	Same as H-841	Secures A-811 to A-805								
H-1257	Same as H-818	Secures H-820, A-803 and 0-809 to A-805								
H-1258	Same as H-302	Secures H-820, A-803 and 0-809 to A-805								
H-1259	Same as H-602	Secures 0-1150 to A-830								
H-1260	Same as H-302	Secures 0-1150 to A-830								
H-1261	PLATE, lock: steel, nickel pl; rectangular shape, rounded ends; approx 7/8" lg x 3/8" wd x 0.095" thk o/a; two #6-40 thd mtg holes	Secures 0-938 to A-813	N17-T-350001-982	CTT	76275	76275	H-1261,H-1262	14	0	0
H-1262	Same as H-1261	Secures 0-941 to A-815								
H-1263	HANDLE: bakelite; approx 1/2" lg x 3/8" OD o/a; mts by ID; ID rounded end 7/32" x 13/64" lg, ID other end 19/64" lg DR #31	Provides means for operating 0-1136 manually	N17-T-350011-595	CTT	103634	103634	H-1263	7	0	0
H-1267	Same as H-841	Secures B-800 to A-842								
H-1268	SCREW, machine: slot and wrench drive; hex H; steel, nickel pl; 1/4"-32 thd; approx 11/16" lg o/a; threaded portion 1/2" lg; head 3/16" lg x 3/8" across flats	Secures B-801 to A-841	N17-T-350004-448 1730-481190630	CTT	106047	106047	H-1268	14	1	18
H-1269	Same as H-402	Secures B-800 to A-842								
H-1270	Same as H-667	Secures B-801 to A-841								
H-1271	WASHER, flat: steel, nickel pl; round, approx 7/32" ID x 1/2" OD x 0.050" thk o/a	Secures B-800 to A-842	N17-T-350013-248	CTT	93160	93160	H-1271,H-1278	42	1	12

TABLE 8-4. COMBINED PARTS AND SPARE PARTS LIST

PARTS									EQUIPMENT SPARE PARTS	
SYMBOL DESIG.	NAME OF PART AND DESCRIPTION	FUNCTION	JAN OR NAVY TYPE DESIG.	SIGNAL CORPS STANDARD NAVY, AIR FORCE STOCK NO.	MANUFACTURERS CODE	MANUFACTURERS DESIG.	TELETYPE PART NO.	ALL SYMBOL DESIGNATIONS INVOLVED	TOTAL NO. PER EQUIP.	BOX	QUAN
H-1272	WASHER, flat: steel, nickel pl; round, approx 7/16" OD x 1/4" ID x 0.035" thk	Secures B-801 to A-841		N17-T-350008-395 1730-044620934	CTT	76081	76081	H-1272,H-1279	28	1	18
H-1273	CLAMP: brass; oxidized copper finish; one bolt employed; approx 31/32" lg x 1/2" wd x 5/16" h o/a, mts by 1/4" body hole; accom 3/8" cable	Secures cable to motor		N17-T-350002-106	CTT	78430	78430	H-1273	3	0	0
H-1274	Same as H-800	Secures H-1275 and A-841 or A-842 to A-805									
H-1275	Same as H-733	Secures cable to A-841 or A-842									
H-1276	SCREW, machine: slot or wrench drive; hex H; steel, nickel pl; #10-32 thd; approx 3/4" lg o/a; 5/8" lg threaded portion; head 1/8" thk x 5/16" across flats	Secures B-800 and A-708 to A-842		N17-T-350004-826 1730-843890000	CTT	78301	78301	H-1276,H-1514 H-1517,H-1519 H-1587,H-1638 H-1714,H-1717 H-1719	56	1	12
H-1277	SCREW, machine: slot or wrench drive; hex H; steel, nickel pl; 1/4"-32 thd; 25/32" lg o/a; threaded portion 19/32" lg; head 3/16" lg x 3/8" across flats	Secures B-801 and A-708 to A-841		N17-T-350016-294	CTT	126986	126986	H-1277	14	0	0
H-1278	Same as H-748	Secures B-800 and A-708 to A-842									
H-1279	Same as H-1272	Secures B-801 and A-708 to A-841									
H-1281	Same as H-402	Secures B-800 and A-708 to A-842									
H-1282	Same as H-667	Secures B-801 and A-708 to A-841									
H-1283	Same as H-602	Secures motor pinion to shaft									
H-1284	Same as H-302	Secures motor pinion to shaft									
H-1285	Same as H-800	Secures H-1286, A-841 or H-842 to A-805									
H-1286	Same as H-733	Secures cable to A-841 or A-842									
H-1287	Same as H-800	Secures H-1288, A-843, A-841 or A-842 to A-805									

H-1288	Same as H-733	Secures cable to A-841 or A-842									
H-1289	Same as H-915	Secures A-841 or A-842 and A-843 to A-805									
H-1290	SCREW, machine: slot drive; cheese H; steel, nickel pl; #6-40 thd; 25/64" lg o/a; threaded portion 11/64" lg; head 3/32" thk x 9/32" diam; shoulder 1/8" lg x 3/16" diam	Secures A-841 or A-842 to A-805		N17-M-350007-558	CTT	71659	71659	H-1290	4	0	0
H-1291	Same as H-863	Provides clearance between O-918 and O-919									
H-1292	Same as H-863	Provides clearance between O-919 and O-920									
H-1293	Same as H-863	Provides clearance between O-920 and O-921									
H-1294	Same as H-863	Provides clearance between O-921 and O-922									
H-1295	Same as H-863	Provides clearance between O-922 and H-864									
H-1296	Same as H-844	Provides means for relocating N-800 or N-801 when reassembled									
H-1297	Same as H-403	Provides clearance between O-926 and O-927									
H-1298	POST, spring: steel, nickel pl; 1/2" lg x 5/32" diam o/a; mts by shank threaded w/#6-40 thd, 3/16" lg; slot drive, grooved body	Anchors O-1190		N17-M-350007-639	CTT	72263	72263	H-1298	7	0	0
H-1300	Same as H-1058	Secures A-1300 and E-1303 to A-1301									
H-1301	SCREW, machine: slot drive; Fil H; steel, nickel pl; #6-40 thd; approx 7/16" lg o/a; 3/8" lg threaded portion; head 1/16" thk x 1/4" diam	Secures A-1321 to A-1301		N17-M-350004-268	CTT	103539	103539	H-1301,H-1529 H-1729	48	0	0
H-1302	Same as H-987	Secures A-1310 to A-1301									
H-1304	SCREW, machine: slot or wrench drive; hex H; steel, nickel pl; #10-32 thd; approx 11/16" lg o/a; threaded portion 3/8" lg; head 1/8" lg x 1/4" across flats	Secures distributor-transmitter to base		N17-M-350006-900	CTT	44035	44035	H-1304,H-1602 H-1747	27	1	27

TABLE 8-4. COMBINED PARTS AND SPARE PARTS LIST

PARTS										EQUIPMENT SPARE PARTS	
SYMBOL DESIG.	NAME OF PART AND DESCRIPTION	FUNCTION	JAN OR NAVY TYPE DESIG.	SIGNAL CORPS STANDARD NAVY, AIR FORCE STOCK NO.	MANUFACTURERS CODE	MANUFACTURERS DESIG.	TELETYPE PART NO.	ALL SYMBOL DESIGNATIONS INVOLVED	TOTAL NO. PER EQUIP.	BOX	QUAN
H-1305	Same as H-402	Secures distributor-transmitter to base									
H-1306	Same as H-403	Secures distributor-transmitter to base									
H-1307	Same as H-987	Secures A-1327 to A-1301									
H-1308	SCREW, machine: slot drive FH; steel, nickel pl; #6-40 thd; 5/16" lg; 15/64" lg threaded portion; head 17/64" diam	Secures A-1302 to A-1301		N17-T-350013-114	CTT	1268	1268	H-1308,H-1698	24	1	9
H-1309	WASHER, flat: steel, nickel pl; round, approx 0.050" thk x 1/4" OD x 7/64" ID	Secures 0-1300 to 0-1301		N17-T-350009-627	CTT	87398	87398	H-1309,H-1351	39	0	0
H-1310	Same as H-325	Secures 0-1300 to 0-1301									
H-1311	Same as H-736	Secures 0-1300 to 0-1301									
H-1312	Same as H-1015	Secures 0-1302 and 0-1300 to 0-1301									
H-1313	Same as H-325	Secures 0-1302 and 0-1300 to 0-1301									
H-1314	Same as H-1066	Secures 0-1302 and 0-1300 to 0-1301									
H-1315	Same as H-888	Provides clearance between 0-1304 and A-1327									
H-1316	SCREW, shoulder: slot drive; flat top binding head; steel, nickel pl; #4-40 thd; approx 1/2" lg o/a; threaded portion 11/32" lg; head 3/32" lg x 1/4" diam; shoulder 1/16" lg x 5/32" diam	Secures 0-1304 and H-1315 to A-1327		N17-T-350012-292	CTT	111442	111442	H-1316	9	1	9
H-1317	Same as H-1051	Anchors 0-1306									
H-1318	Same as H-1015	Secures 0-1307 and H-1341 to A-1305									
H-1319	Same as H-325	Secures 0-1307 and H-1341 to A-1305									

H-1320	STUD: steel, nickel pl; approx 29/64" lg o/a; hex shoulder 3/32" lg x 1/4" across flats; one end threaded w/#6-40 thd, opposite end plain shank - 1/4" lg x 3/32" diam; shank tapered from shoulder	Operates 0-1304	N17-T-350003-544	CTT	97551	97551	H-1320	9	0	0	
H-1321	Same as H-633	Secures 0-1307 and H-1341 to A-1305									
H-1322	Same as H-302	Secures H-1320 to 0-1307									
H-1323	Same as H-320	Secures 0-1303 to A-1327									
H-1324	Same as H-302	Secures 0-1303 to A-1327									
H-1325	Same as H-325	Secures 0-1304 to A-1327									
H-1326	Same as H-316	Secures H-1333 to A-1327									
H-1327	Same as H-302	Secures 0-1340 to A-1309									
H-1328	Same as H-741	Secures 0-1340 to A-1309									
H-1329	Same as H-679	Secures 0-1301 to A-1315									
H-1333	Same as H-633	Limits travel of 0-1304									
H-1334	Same as H-320	Secures H-1352 to A-1327									
H-1335	Same as H-302	Secures H-1352 to A-1327									
H-1336	Same as H-303	Secures H-1352 to A-1327									
H-1337	Same as H-419	Secures 0-1303 to A-1327									
H-1338	Same as H-302	Secures H-1339 to 0-1307									
H-1339	STUD: steel, nickel pl; 21/32" lg o/a, body 19/64" diam, hex H 5/16" across flats; threaded portion 1/16" lg w/#6-40 thd	Operates E-1307	N17-T-350003-543	CTT	97550	97550	H-1339	9	0	0	
H-1340	Same as H-316	Secures H-1317 to 0-1307									
H-1341	BUSHING: stand off for mtg of release bar; steel; male; over-all dimensions 9/64" lg, 7/64" ID, 11/64" OD bearing surface, 5/16" OD shoulder, 5/64" lg	Provides pivot for 0-1307	N17-T-350004-945	CTT	90539	90539	H-1341	9	0	0	

TABLE 8-4. COMBINED PARTS AND SPARE PARTS LIST

PARTS										EQUIPMENT SPARE PARTS	
SYMBOL DESIG.	NAME OF PART AND DESCRIPTION	FUNCTION	JAN OR NAVY TYPE DESIG.	SIGNAL CORPS STANDARD NAVY, AIR FORCE STOCK NO.	MANUFACTURERS CODE	MANUFACTURERS DESIG.	TELETYPE PART NO.	ALL SYMBOL DESIGNATIONS INVOLVED	TOTAL NO. PER EQUIP.	BOX	QUAN
H-1342	Same as H-320	Provides means for changing the height of A-1318									
H-1343	SCREW, machine: slot drive; hex H; steel, nickel pl; #6-40 thd; 27/32" lg; 3/4" lg threaded portion; 1/4" across flats x 3/32" thk head	Positions front cover on numbering transmitter bases		6L640-13-81S1 N17-T-350016-406	CTT	86022	86022	H-1343,H-1510 H-1710	6	1	18
H-1344	Same as H-303	Secures H-1343 to A-1303									
H-1345	Same as H-816	Secures A-1303 to A-1302									
H-1346	WASHER, lock: steel, round; approx 3/16" OD x 1/8" ID x 0.020" thk o/a; split-ring type	Secures A-1303 to A-1302		N17-T-350013-388 1730-044620550	CTT	110743	110743	H-1346,H-1362 H-1365,H-1637 H-1798	48	1	36
H-1347	SCREW, machine: slot drive; Fil H; steel, nickel pl; #4-40 thd; approx 9/16" lg o/a; 1/2" lg threaded portion; head 3/16" diam x 1/16" thk	Secures A-1303 to A-1302		N17-T-350014-116 1730-043601302	CTT	150089	150089	H-1347	6	0	0
H-1348	Same as H-303	Secures 0-1301 and 0-1302 to H-1352									
H-1349	Same as H-302	Secures 0-1301 and 0-1302 to H-1352									
H-1350	Same as H-320	Secures 0-1301 and 0-1302 to H-1352									
H-1351	Same as H-1309	Provides clearance between 0-1300 and 0-1301									
H-1352	POST, supporting: clutch lever post; steel, nickel pl; approx 1-1/2" lg x 3/16" diam x 5/16" across flats of hex shoulder; mts by 5/16" lg #6-40 threaded end	Supports 0-1301 and 0-1302		N17-T-350009-540	CTT	86209	86209	H-1352	3	0	0
H-1353	Same as H-316	Secures 0-1304 to A-1327									
H-1354	Same as H-325	Secures H-1333 to A-1327									
H-1355	Same as H-1015	Secures H-1333 to A-1327									
H-1356	Same as H-888	Secures 0-1304 to A-1327									

H-1357	SCREW, machine: slot drive; F11 H; steel, nickel pl; #4-40 approx 28/32" lg o/a; 1/4" lg threaded portion; head 3/32" thk x 3/16" diam	Secures contact assembly to A-1305	N17-T-350002-483	CTT	83856	83856	H-1357	18	0 0
H-1358	Same as H-1051	Anchors 0-1305							
H-1359	Same as H-1066	Secures A-1305 to A-1301							
H-1360	Same as H-325	Secures A-1305 to A-1301							
H-1361	SCREW, machine: slot or wrench drive; hex H; steel, nickel pl; #4-40 thd; approx 1/4" lg o/a; 3/16" lg threaded portion; head 1/16" thk x 3/16" across flats	Secures 0-1320 to 0-1319	N17-T-350014-785 1730-043601314	CTT	151737	151737	H-1361	18	1 18
H-1362	Same as H-1346	Secures 0-1320 to 0-1319							
H-1363	WASHER, flat: steel, nickel pl; round, approx 7/32" OD x 1/16" ID x 1/32" thk o/a	Secures 0-1320 to 0-1319	N17-T-350013-176 1730-481940800	CTT	42823	42823	H-1363,H-1364	54	1 54
H-1364	Same as H-1363	Secures 0-1322 to 0-1321							
H-1365	Same as H-1346	Secures 0-1322 to 0-1321							
H-1366	SCREW, machine: slot drive; F11 H; steel, nickel pl; #4-40 thd; approx 1/2" lg o/a; 7/16" lg threaded portion; head 3/16" diam x 1/16" thk	Secures 0-1322 to 0-1321	N17-T-350015-104 1730-043602131	CTT	151687	151687	H-1366	18	1 54
H-1367	Same as H-303	Secures 0-1325 to 0-1326							
H-1368	Same as H-302	Secures 0-1325 to 0-1326							
H-1369	SCREW, machine: slot drive; F11 H; steel, black oxide; #6-40 thd; 3/4" lg o/a; threaded portion 5/8" lg; head 1/8" wd x 7/32" diam	Secures 0-1325 to 0-1326	6L6640-10.588 N17-T-350016-291	CTT	115615	115615	H-1369	9	1 9
H-1370	WASHER, lock: steel; round, 5/32" ID, 1/4" OD, 1/32" thk; split-ring type	Secures 0-1328 to 0-1327	N17-T-350016-292	CTT	124177	124177	H-1370,H-1372 H-1434,H-1600 H-1742	59	1 22
H-1371	Same as H-301	Secures 0-1328 to 0-1327							
H-1372	Same as H-1370	Secures 0-1328 to 0-1326							
H-1373	Same as H-1058	Secures 0-1328 to 0-1326							
H-1374	Same as H-701	Secures E-1310 to L-1301							

TABLE 8-4. COMBINED PARTS AND SPARE PARTS LIST

PARTS										EQUIPMENT SPARE PARTS	
SYMBOL DESIG.	NAME OF PART AND DESCRIPTION	FUNCTION	JAN OR NAVY TYPE DESIG.	SIGNAL CORPS STANDARD NAVY, AIR FORCE STOCK NO.	MANUFACTURERS CODE	MANUFACTURERS DESIG.	TELETYPE PART NO.	ALL SYMBOL DESIGNATIONS INVOLVED	TOTAL NO. PER EQUIP.	BOX	QUAN
H-1375	Same as H-703	Secures E-1310 to L-1301									
H-1376	Same as H-419	Secures A-1307 to A-1309									
H-1377	Same as H-302	Secures A-1307 to A-1309									
H-1378	Same as H-320	Secures A-1307 to A-1309									
H-1379	Same as H-627	Secures A-1306 and L-1300 or L-1301 to A-1307									
H-1380	Same as H-302	Secures A-1306 and L-1300 or L-1301 to A-1307									
H-1381	Same as H-302	Secures 0-1329 to 0-1331									
H-1382	Same as H-741	Secures 0-1329 to 0-1331									
H-1383	Same as H-320	Secures 0-1331 to 0-1337 and provides means for adjusting 0-1331									
H-1384	Same as H-302	Secures 0-1331 to 0-1337 and provides means for adjusting 0-1331									
H-1385	SCREW, machine: wrench drive; hex H; steel, nickel pl; #6-40 thd; approx 1/4" lg o/a; threaded portion 3/16" lg; head 1/16" thk x 1/4" across flats	Secures 0-1331 to 0-1337 and provides means for adjusting 0-1331		N17-T-350008-398	CTT	76168	76168	H-1385	9	0	0
H-1386	POST, spring: steel, nickel pl; approx 3/8" lg x 1/8" diam o/a; mts by approx 3/32" lg threaded shank; slot drive w/radial body groove	Anchors 0-1335		N17-T-350013-621 1730-041980000	CTT	86720	86720	H-1386	9	0	0
H-1387	Same as H-302	Secures 0-1339 to A-1309									
H-1388	Same as H-741	Secures 0-1339 to A-1309									
H-1389	SCREW, machine: wrench or slot drive; FH; steel, nickel pl; #6-40 thd; 13/32" lg o/a; threaded portion 1/4" lg; head 1/16" thk x 1/4" diam; shoulder 3/32" lg x 3/16" diam	Secures 0-1329 to 0-1331			CTT	129309	129309	H-1389	9	1	9

H-1390	WASHER, flat; steel, nickel pl; round 1/8" ID, 1/4" OD, 1/16" thk	Provides clearance between 0-1329 and 0-1331	6158022-94 N17-T-350016-296	CTT	129311	129311	H-1390	9	0 0
H-1391	Same as H-325	Secures A-1308 to 0-1341							
H-1392	SCREW, machine: slot drive; Fil H; steel, nickel pl; #4-40 thd; approx 9/32" lg o/a; 3/16" lg threaded portion; head 11/64" diam x 3/32" thk	Secures A-1308 to 0-1341	N17-T-350001-339	CTT	1163	1163	H-1392,H-1419	27	1 18
H-1394	WASHER: steel; round, 5/16" OD x 3/16" ID x 0.010" thk	Provides seat for 0-1348	N17-T-350008-346	CTT	75607	75607	H-1394	9	1 9
H-1395	Same as H-303	Secures 0-1351 to A-1310							
H-1396	Same as H-302	Secures 0-1351 to A-1310							
H-1397	POST, spring; steel, nickel pl; approx 1/4" lg x 1/8" diam o/a; mts by shank threaded 7/64" lg w/#4-40 thd; slot drive, groove in body	Anchors 0-1353	N17-T-350002-262	CTT	80478	80478	H-1397	9	0 0
H-1398	Same as H-998	Provides means for adjusting E-1313 or E-1317							
H-1399	Same as H-1199	Secures H-1398 to 0-1354 or 0-1356							
H-1400	SCREW, machine: slot drive; FH; steel, nickel pl; #6-40 thd; approx 3/4" lg o/a; threaded portion 3/8" lg; head 5/64" lg x 17/64" diam	Secures transmitting contact assembly to A-1310	N17-T-350004-687	CTT	112498	112498	H-1400	36	1 36
H-1401	SCREW, machine: slot drive; Fil H; steel, nickel pl; #2-56 thd; approx 1/4" lg o/a; 3/16" lg threaded portion; head 1/16" thk x 1/8" diam	Secures H-1404 to A-1312	N17-T-350013-155 1730-481156000	CTT	1164	1164	H-1401	18	1 9
H-1402	Same as H-1159	Secures H-1404 to A-1312							
H-1403	WASHER, flat: steel; round, approx 3/16" OD x 3/32" ID x 0.042" thk o/a	Secures H-1404 to A-1312	N17-T-350012-655 1730-482766000	CTT	73844	73844	H-1403	18	1 9
H-1404	PLATE, retainer: steel, nickel pl; curved w/3 rounded ends; approx 7/16" wd x 7/16" h x 0.035" thk o/a; mts by body hole; curved elongated slot along curved edge	Provides means for adjusting 0-1398	N17-T-350010-868 1730-040335508	CTT	97528	97528	H-1404	18	0 0
H-1405	Same as H-816	Secures A-1313 to A-1314							
H-1407	Same as H-302	Secures A-1314 to A-1321 and A-1326							

TABLE 8-4. COMBINED PARTS AND SPARE PARTS LIST

PARTS										EQUIPMENT SPARE PARTS	
SYMBOL DESIG.	NAME OF PART AND DESCRIPTION	FUNCTION	JAN OR NAVY TYPE DESIG.	SIGNAL CORPS STANDARD NAVY, AIR FORCE STOCK NO.	MANUFACTURERS CODE	MANUFACTURERS DESIG.	TELETYPE PART NO.	ALL SYMBOL DESIGNATIONS INVOLVED	TOTAL NO. PER EQUIP.	BOX	QUAN
H-1408	SCREW, machine: slot drive; cheese H; steel, nickel pl; #4-40 thd; approx 17/64" lg; threaded portion 5/32" lg; head 1/16" thk x 7/32" diam; shoulder 1/16" lg x 9/64" diam	Secures A-1313 to A-1314		N17-T-350016-583	CTT	110334	110334	H-1408	9	0	0
H-1409	Same as H-1015	Secures 0-1379 to 0-1366									
H-1410	Same as H-325	Secures 0-1379 to 0-1366									
H-1411	Same as H-1066	Secures 0-1379 to 0-1366									
H-1412	Same as H-303	Secures 0-1368 to 0-1375									
H-1413	SCREW, machine: wrench drive; hex H; steel, nickel pl; #6-40 11/32" lg o/a; threaded portion 3/16" lg; head 1/16" lg x 1/4" across flats; shoulder 3/16" diam x 1/8" lg	Secures 0-1368 to 0-1375		4T99278 N17-T-350016-288 1730-040463809	CTT	99278	99278	H-1413,H-1415	18	1	18
H-1414	Same as H-303	Secures 0-1370 to 0-1379									
H-1415	Same as H-1413	Secures 0-1370 to 0-1379									
H-1417	Same as H-1015	Secures A-1313 to A-1314 and provides means for adjusting A-1313									
H-1418	Same as H-325	Secures A-1313 to A-1314 and provides means for adjusting A-1313									
H-1419	Same as H-1392	Secures A-1313 to A-1314 and provides means for adjusting A-1313									
H-1420	Same as H-1049	Secures A-1314 to A-1321 and A-1326									
H-1421	Same as H-325	Secures 0-1375 to 0-1376									
H-1422	Same as H-1015	Secures 0-1375 to 0-1376									
H-1423	Same as H-1066	Secures 0-1375 to 0-1376									

H-1424	Same as H-325	Secures O-1378 to O-1376								9	9
H-1425	Same as H-316	Secures O-1378 to O-1376									
H-1426	SCREW, machine: slot drive; F11 H; steel, bright zinc and chromate; #4-40 thd; 17/32" lg o/a; 7/32" lg threaded portion; head 3/32" thk, 1/4" diam; shoulder 5/32" diam, 5/16" lg	Secures O-1378 to O-1376	N17-T-350002-227	CTT	80283	80283	H-1426			9	1
H-1427	Same as H-703	Secures E-1320 to A-1315									
H-1428	Same as H-679	Secures C-1300 to A-1315									
H-1429	Same as H-325	Secures E-1320 to A-1315									
H-1430	Same as H-816	Secures E-1320 to A-1315									
H-1431	Same as H-325	Secures A-1315 to A-1314									
H-1432	Same as H-703	Secures A-1315 to A-1314									
H-1433	Same as H-1072	Secures A-1312 and O-1393 to A-1326									
H-1434	Same as H-1370	Secures A-1312 and O-1393 to A-1326									
H-1435	SCREW, pivot: slot drive; steel; #6-40 thd; 5/16" lg; 13/64" lg threaded portion; 600 cone point	Supports and provides pivot for O-1380	N17-T-350007-485	CTT	70803	70803	H-1435,H-1445	36	1	18	
H-1436	Same as H-741	Secures H-1435 to A-1316									
H-1437	Same as H-1066	Secures A-1316 to A-1317									
H-1438	Same as H-325	Secures A-1316 to A-1317									
H-1439	Same as H-1015	Secures A-1316 to A-1317									
H-1440	Same as H-1066	Secures A-1318, H-1468 and O-1394 to A-1326									
H-1441	Same as H-325	Secures A-1318, H-1468 and O-1394 to A-1326									
H-1442	Same as H-1015	Secures A-1318, H-1468 and O-1394 to A-1326									
H-1443	Same as H-987	Secures A-1318, H-1342 and O-1308 to A-1302									

TABLE 8-4. COMBINED PARTS AND SPARE PARTS LIST

PARTS										EQUIPMENT SPARE PARTS	
SYMBOL DESIG.	NAME OF PART AND DESCRIPTION	FUNCTION	JAN OR NAVY TYPE DESIG.	SIGNAL CORPS STANDARD NAVY, AIR FORCE STOCK NO.	MANUFACTURERS CODE	MANUFACTURERS DESIG.	TELETYPE PART NO.	ALL SYMBOL DESIGNATIONS INVOLVED	TOTAL NO. PER EQUIP.	BOX	QUAN
H-1444	Same as H-302	Secures A-1318, H-1342 and 0-1308 to A-1302									
H-1445	Same as H-1436	Supports and provides pivot for 0-1380									
H-1446	Same as H-741	Secures H-1445 to A-1316									
H-1447	Same as H-325	Secures A-1319 to A-1318									
H-1448	Same as H-1020	Secures A-1319 to A-1318									
H-1449	Same as H-1015	Secures A-1320 to A-1318									
H-1450	Same as H-325	Secures A-1320 to A-1318									
H-1451	Same as H-1022	Secures A-1320 to A-1318									
H-1452	NUT, hexagon: steel, nickel pl; #10-32 thd; 3/32" thk; 1/4" across flats	Secures 0-1381 to A-1321		N17-T-350012-507	CTT	89897	89897	H-1452,H-1469	18	1	18
H-1453	Same as H-320	Provides clearance between A-1318 and A-1321									
H-1454	Same as H-303	Secures H-1455 to A-1322									
H-1455	SCREW, pivot: slot drive; Fil H; steel, bright zinc and chromate; #6-40 thd; 1/2" lg o/a; approx 13/32" lg threaded portion; head 3/32" thk, 1/4" diam; 60° cone point	Supports and provides pivot for 0-1387		N17-T-350007-624	CTT	72096	72096	H-1455,H-1458	18	1	18
H-1456	Same as H-325	Secures A-1323, A-1322 and 0-1386 to A-1318									
H-1457	Same as H-736	Secures A-1323, A-1322 and 0-1386 to A-1318									
H-1458	Same as H-1455	Supports and provides pivot for 0-1387									
H-1459	Same as H-303	Secures H-1458 to A-1324									

H-1460	RING, retainer: steel, nickel pl; "C" shape w/2 internal cutouts; approx 5/32" OD x 1/16" ID x 0.010" thk o/a	Secures 0-1390 to 0-1392	N17-T-350013-797 1730-041512000	WKI	5133-6	119647	H-1460	9	1	9
H-1461	WASHER, flat: steel; round, 5/64" ID, 3/16" OD, 1/64" thk	Secures 0-1390 to 0-1392	N17-T-350012-690	CTT	102839	102839	H-1461	18	1	18
H-1462	Same as H-738	Secures H-1464 to 0-1392								
H-1463	Same as H-325	Secures H-1464 to 0-1392								
H-1464	SCREW, pilot: slot drive; cheese H; steel, nickel pl; #4-40 thd; approx 15/32" lg o/a; threaded portion 1/8" lg; 1/16" thk x 3/16" diam head; grooved pilot 0.077" OD	Supports and provides pivot for 0-1390	N17-T-350016-547	CTT	122475	122475	H-1464	9	1	9
H-1465	SCREW, adjustment: steel, nickel pl; to set position of detent	Secures 0-1391 and 0-1392 to A-1324	N17-T-350007-930 1730-482994000	CTT	74171	74171	H-1465	9	1	9
H-1466	Same as H-303	Secures 0-1391 and 0-1392 to A-1324								
H-1467	Same as H-302	Secures 0-1391 and 0-1392 to A-1324								
H-1468	Same as H-320	Provides clearance between A-1318 and A-1326								
H-1469	Same as H-1452	Secures 0-1395 to A-1326								
H-1470	Same as H-325	Secures A-1325, A-1324 and 0-1388 to A-1318								
H-1471	Same as H-736	Secures A-1325, A-1324 and 0-1388 to A-1318								
H-1477	Same as H-987	Secures A-1309 to A-1301								
H-1500	SCREW, machine: slot drive; FH; steel, nickel pl; #6-40 thd; approx 5/8" lg o/a; threaded portion 9/16" lg; head 7/32" diam x 1/16" thk	Secures E-1506 and E-1507 to A-1500	N17-T-350014-925 1730-043601399	CTT	151693	151693	H-1500,H-1700	4	0	0
H-1501	Same as H-303	Secures H-1503 and 0-1500 to A-1501								
H-1502	Same as H-302	Secures H-1503 and C-1500 to A-1501								
H-1503	CLAMP: cable clamp; steel; nickel pl; approx 1" lg x 1/2" wd x 11/32" h o/a; 0.032" thk material; accom 5/16" diam cable	Secures cable to A-1501	N17-T-350006-297	CTT	8254	8254	H-1503,H-1506 H-1515,H-1703 H-1706	8	0	0

TABLE 8-4. COMBINED PARTS AND SPARE PARTS LIST

PARTS										EQUIPMENT SPARE PARTS	
SYMBOL DESIG.	NAME OF PART AND DESCRIPTION	FUNCTION	JAN OR NAVY TYPE DESIG.	SIGNAL CORPS STANDARD NAVY, AIR FORCE STOCK NO.	MANUFACTURERS CODE	MANUFACTURERS DESIG.	TELETYPE PART NO.	ALL SYMBOL DESIGNATIONS INVOLVED	TOTAL NO. PER EQUIP.	BOX	QUAN
H-1504	Same as H-302	Secures H-1503 to A-1501									
H-1505	Same as H-403	Secures H-1515 to A-1503									
H-1506	Same as H-320	Secures H-1503 and ground cable to A-1501									
H-1507	Same as H-320	Secures H-1503 and C-1500 to A-1501									
H-1508	Same as H-1049	Secures H-1503 and C-1500 to A-1501									
H-1509	Same as H-302	Secures H-1506 to A-1501									
H-1510	Same as H-1343	Secures H-1506 to A-1501									
H-1511	Same as H-302	Secures A-1500 to A-1501									
H-1512	SCREW, machine: slot drive; hex H; steel, nickel pl; #6-40 thd; approx 13/32" lg o/a; full threaded; 3/32" thk head, 3/16" across flats	Secures A-1500 to A-1501		6L6640-5.81S N17-T-350016-283	CTT	1033	1033	H-1512,H-1712	18	0	0
H-1513	Same as H-402	Secures A-1502 and O-1500 to A-1501									
H-1514	Same as H-746	Secures A-1502 and O-1500 to A-1501									
H-1515	Same as H-1503	Secures cable to A-1503									
H-1516	Same as H-402	Secures H-1515 and A-1503 to A-1501									
H-1517	Same as H-746	Secures H-1515 and A-1503 to A-1501									
H-1518	Same as H-320	Secures H-1526 to A-1501									
H-1519	Same as H-746	Secures B-1500 or B-1501 to A-1501									
H-1520	Same as H-402	Secures B-1500 or B-1501 to A-1501									
H-1521	WASHER, flat: steel, nickel pl; round, approx 5/16" OD x 3/16" ID x 1/16" thk o/a	Secures B-1500 or B-1501 to A-1501		N17-T-350013-215 1730-484688000	CTT	84579	84579	H-1521,H-1721	12	0	0

H-1522	Same as H-602	Secures motor pinion to B-1500 or B-1501									
H-1523	Same as H-302	Secures motor pinion to B-1500 or B-1501									
H-1524	Same as H-602	Secures H-1526 to A-1501									
H-1525	Same as H-302	Secures H-1526 to A-1501									
H-1526	GUARD: gear; steel, nickel pl; approx 3-5/16" lg x 1-1/8" wd x 7/8" thk o/a; mtg by two body holes in formed end; rounded corners	Protects drive gear on numbering distributor-transmitter bases	N17-T-350012-252 1730-040693200	CTT	110726	110726	H-1526,H-1724	3	0	0	
H-1527	HANDLE: steel, nickel pl; approx 4-3/16" lg x 1/2" wd x 27/32" h o/a; 1/2" wd steel grip 3-3/16" lg; two 5/32" holes	Provides means for moving numbering distributor-transmitter bases	*3	CTT	112692	112692	H-1527,H-1727	6	0	0	
H-1528	Same as H-302	Secures H-1527 to A-1501									
H-1529	Same as H-1301	Secures H-1527 to A-1501									
H-1530	Same as H-731	Secures H-1619 to A-1501									
H-1531	Same as H-302	Secures H-1619 to A-1501									
H-1532	Same as H-302	Secures A-1504 to A-1501									
H-1533	Same as H-650	Secures A-1504 to A-1501									
H-1534	SCREW, set: slot drive; headless; steel, nickel pl; #6-40 thd; approx 1/4" lg x 9/64" diam; cup point	Secures H-1536 to 0-1530	N17-T-350002-380	CTT	82720	82720	H-1534,H-1581	8	0	0	
H-1535	Same as H-303	Secures H-1619 to A-1501									
H-1536	COLLAR, set: steel; no dimension of this item is greater than one inch; two #6-40 thd holes	Positions 0-1530 in 0-1508	4T117833 N17-T-350016-243	CTT	117833	117833	H-1536,H-1583 H-1594	4	0	0	
H-1537	WASHER, lock: steel; round, approx 5/8" ID, 49/64" OD, 0.030" thk; straight internal teeth	Secures 0-1504 to 0-1508	N17-T-350005-614	CAXO	1226-3	3340	H-1537	3	0	0	
H-1538	Same as H-466	Secures 0-1504 to 0-1508									
H-1539	Same as H-741	Secures H-1550, H-1549, 0-1506 or 0-1501 to 0-1504									
			*3 Shop Manufacture								

TABLE 8-4. COMBINED PARTS AND SPARE PARTS LIST

PARTS										EQUIPMENT SPARE PARTS	
SYMBOL DESIG.	NAME OF PART AND DESCRIPTION	FUNCTION	JAN OR NAVY TYPE DESIG.	SIGNAL CORPS STANDARD NAVY, AIR FORCE STOCK NO.	MANUFACTURERS CODE	MANUFACTURERS DESIG.	TELETYPE PART NO.	ALL SYMBOL DESIGNATIONS INVOLVED	TOTAL NO. PER EQUIP.	BOX	QUAN
H-1540	Same as H-302	Secures H-1550, H-1549, 0-1506 or 0-1511 to 0-1504									
H-1541	SCREW, shoulder: slot drive; flat Fil H; steel, nickel pl; #6-40 thd; approx 15/32" lg o/a; threaded portion 3/16" lg; head approx 1/4" diam x 1/16" thk; shoulder approx 3/16" diam x 7/32" lg	Secures 0-1506 to 0-1504		4T128271 N17-T-350016-250	CTT	128271	128271	H-1541,H-1548	6	0	0
H-1542	Same as H-302	Secures H-1544 to 0-1506									
H-1543	Same as H-741	Secures H-1544 to 0-1506									
H-1544	PIN, snubber: steel; approx 1-7/32" lg, 9/32" diam o/a; one end threaded 5/32" lg w/#6-40 thd, opposite end slotted 1/32" d	Rides numbering tape to operate 0-1506		4T128272 N17-T-350016-245	CTT	128272	128272	H-1544,H-1563	6	0	0
H-1545	Same as H-741	Secures 0-1509 and H-1547 to 0-1514									
H-1546	Same as H-302	Secures 0-1509 and H-1547 to 0-1514									
H-1547	SPACER: steel, nickel pl; round; approx 1/8" lg x 1/4" diam o/a; mts by ID; 5/32" ID csk hole	Space between 0-1509 and 0-1514		4T128331 N17-T-350016-247	CTT	128331	128331	H-1547	9	0	0
H-1548	Same as H-1541	Secures 0-1511 to 0-1504									
H-1549	PIN, latch: steel; approx 1-3/4" lg, 3/16" diam o/a; one end threaded 5/32" lg w/#6-40 thd, opposite end 1/32" chamfer	Secures 0-1504 in operating position by 0-1525		4T128268 N17-T-350016-244	CTT	128268	128268	H-1549	3	0	0
H-1550	PIN: steel; approx 1-13/32" lg, 9/32" diam o/a; one end threaded 5/32" lg w/#6-40 thd, opposite end slotted 1/32" d	Provides guide for numbering tape		4T128267 N17-T-350016-246	CTT	128267	128267	H-1550,H-1564	6	0	0
H-1551	SCREW, machine: slot drive; FH; steel, nickel pl; #6-40 thd; approx 11/32" lg o/a; threaded portion 9/32" lg; 1/16" thk x 5/32" diam head	Secures H-1547 and 0-1509 to 0-1514		6L6640-5.593 N17-T-350016-242	CTT	129098	129098	H-1551	9	0	0
H-1552	Same as H-466	Locks 0-1517 to 0-1519									

H-1553	Same as H-818	Secures 0-1519 to 0-1530									
H-1554	Same as H-302	Secures 0-1519 to 0-1530									
H-1555	Same as H-320	Secures 0-1519 to 0-1530									
H-1556	WASHER: steel, plated; round, approx 3/8" ID, 3/4" OD, 1/16" thk o/a	Provides clearance between 0-1519 and 0-1523		6L58026-103 N17-T-350016-273	CTT	117803	117803	H-1556	1	0	0
H-1557	Same as H-741	Secures 0-1522 to 0-1523									
H-1558	Same as H-403	Secures 0-1522 to 0-1523									
H-1559	Same as H-818	Secures 0-1521 to 0-1530									
H-1560	Same as H-302	Secures 0-1521 to 0-1530									
H-1561	Same as H-320	Secures 0-1521 to 0-1530									
H-1562	SCREW, machine: slot drive; flat Fil H; steel, nickel pl; #6-40 thd; approx 31/64" lg o/a; threaded portion 7/32" lg; head 3/32" lg x 9/32" diam; shoulder 5/32" lg x 3/16" diam	Secures 0-1522 to 0-1523		N17-T-350005-512	CTT	1041	1041	H-1562	3	0	0
H-1563	Same as H-1544	Provides guide for numbering tape									
H-1564	Same as H-1550	Provides guide for numbering tape									
H-1565	Same as H-301	Secures A-1505 to numbering distributor-transmitters									
H-1566	Same as H-302	Secures A-1505 to numbering distributor-transmitters									
H-1567	Same as H-442	Secures A-1515, A-1516 or A-1517 to numbering distributor-transmitters									
H-1568	Same as H-1066	Secures 0-1525 and H-1573 to A-1505									
H-1569	Same as H-325	Secures 0-1525 and H-1573 to A-1505									
H-1570	Same as H-1066	Secures 0-1525 and H-1573 to A-1505									
H-1571	Same as H-325	Secures 0-1525 and H-1573 to A-1505									

TABLE 8-4. COMBINED PARTS AND SPARE PARTS LIST

PARTS										EQUIPMENT SPARE PARTS	
SYMBOL DESIG.	NAME OF PART AND DESCRIPTION	FUNCTION	JAN OR NAVY TYPE DESIG.	SIGNAL CORPS STANDARD NAVY, AIR FORCE STOCK NO.	MANUFACTURERS CODE	MANUFACTURERS DESIG.	TELETYPE PART NO.	ALL SYMBOL DESIGNATIONS INVOLVED	TOTAL NO. PER EQUIP.	BOX	QUAN
H-1572	Same as H-1015	Secures O-1525 and H-1573 to A-1505									
H-1573	INSULATOR, plate: rectangular shape; bakelite PS grade; approx 1/2" lg x 9/32" wd x 3/32" thk o/a; mts by two body holes 5/32" diam	Insulates O-1525 from A-1505		N17-T-350011-377	CTT	99803	99803	H-1573	3	0	0
H-1574	Same as H-741	Secures H-1563 or H-1564 to A-1505									
H-1575	POST, spring: steel, nickel pl; approx 1-15/32" lg x 3/16" across flats o/a; mts by 1/4" lg #6-40 threaded shank; spring groove on plain shank	Anchors O-1526		N17-T-350016-731	CTT	117836	117836	H-1575	1	0	0
H-1576	STUD: steel, plated; approx 1-11/32" lg, 5/16" hexagon o/a; one end #6-40 thd, 9/32" lg, opposite end #6-40 thd tap 11/32" d	Supports O-1527		4T117838 N17-T-350016-274	CTT	117838	117838	H-1576	1	0	0
H-1577	SCREW, adjustment: steel, nickel pl	Secures O-1527 and H-1576 to A-1506		N17-T-350001-788	CTT	74520	74520	H-1577	1	0	0
H-1578	SCREW, machine: slot drive; Fil H; steel, nickel pl; #10-32 thd; approx 1-3/4" lg o/a; threaded portion 1" lg; head 11/64" thk x 19/64" diam	Secures O-1528, O-1534 and O-1535 to A-1501		N17-T-350002-283	CTT	80845	80845	H-1578,H-1591	4	0	0
H-1579	Same as H-402	Secures O-1528, O-1534 and O-1535 to A-1501									
H-1580	Same as H-1199	Secures N-1500 to A-1513									
H-1581	Same as H-1534	Secures H-1583 to O-1530 or H-1594 to H-1530									
H-1582	Same as H-741	Secures H-1575 to A-1506									
H-1583	Same as H-1536	Locates tight tape reel assembly on O-1530									
H-1584	Same as H-466	Secures O-1520 to A-1506									
H-1585	Same as H-741	Secures H-1576 to A-1506									

H-1586	Same as H-302	Secures H-1576 to A-1506										
H-1587	Same as H-746	Secures A-1506 to 0-1528										
H-1588	Same as H-402	Secures A-1506 to 0-1528										
H-1589	Same as H-403	Secures A-1506 to 0-1528										
H-1590	Same as H-466	Secures 0-1532 to A-1507										
H-1591	Same as H-1578	Secures 0-1529, 0-1546 and 0-1547 to A-1501										
H-1592	Same as H-402	Secures 0-1529, 0-1546 and 0-1547 to A-1501										
H-1593	HOLDER, card: steel, nickel pl; rectangular shape, three edges off-set, rectangular cutout w/rounded corners in ctr; approx 2-3/8" lg x 1-1/8" wd x 1/16" thk o/a; mts by four body holes	Secures identification cards on numbering base	N17-T-350004-632	CTT	110955	110955	H-1593,H-1740	9	0	0		
H-1594	Same as H-1536	Positions 0-1530 in 0-1532										
H-1595	SCREW, set: slot drive; headless; steel, nickel pl; #10-32 thd; approx 3/16" diam; flat point	Secures 0-1533 to 0-1545	N17-T-350009-548	CTT	86341	86341	H-1595,H-1736	6	1	6		
H-1596	Same as H-1058	Secures 0-1513, 0-1540, 0-1542 or 0-1544 to 0-1545										
H-1597	Same as H-302	Secures 0-1513, 0-1540, 0-1542 or 0-1544 to 0-1545										
H-1598	Same as H-302	Secures drive gear to 0-1513										
H-1599	Same as H-1177	Secures drive gear to 0-1513										
H-1600	Same as H-1370	Secures 0-1539 to 0-1540, 0-1541 to 0-1542 or 0-1543 to 0-1544										
H-1601	SCREW, machine: slot drive; cheese H; steel, nickel pl; #6-40 thd; approx 41/64" lg o/a; threaded portion 37/64" lg; head 1/16" lg x 7/32" diam	Secures 0-1539 to 0-1540, 0-1541 to 0-1542 or 0-1543 to 0-1544	N17-T-350004-153	CTT	102465	102465	H-1601,H-1741	14	0	0		
H-1602	Same as H-1304	Secures 0-1563 to A-1501										

TABLE 8-4. COMBINED PARTS AND SPARE PARTS LIST

PARTS										EQUIPMENT SPARE PARTS	
SYMBOL DESIG.	NAME OF PART AND DESCRIPTION	FUNCTION	JAN OR NAVY TYPE DESIG.	SIGNAL CORPS STANDARD NAVY, AIR FORCE STOCK NO.	MANUFACTURERS CODE	MANUFACTURERS DESIG.	TELETYPE PART NO.	ALL SYMBOL DESIGNATIONS INVOLVED	TOTAL NO. PER EQUIP.	BOX	QUAN
H-1603	Same as H-402	Secures O-1563 to A-1501									
H-1604	NUT, round: steel, nickel pl; 9/16"-32 thd; approx 3/32" thk, 1-5/8" diam o/a; eight slots on radius	Provides means for adjusting friction between O-1514 and O-1516 by O-1515		N17-T-350012-497	CTT	77012	77012	H-1604	3	0	0
H-1605	HANDLE: reel; black fiber; approx 3/4" lg x 9/16" OD x 7/32" ID o/a; mts by ID; straight knurled	Provides means for turning O-1551		4T128338 N17-T-350016-381	CTT	128338	128338	H-1605	3	0	0
H-1606	POST: steel, nickel pl; approx 1-3/8" lg x 3/8" sq o/a; mts by axial tapped hole; two tapped holes through one side, one tapped through other side	Supports A-1509		N17-T-350003-558	CTT	97586	97586	H-1606,H-1609 H-1624,H-1635 H-1730,H-1761 H-1788,H-1792	19	0	0
H-1607	Same as H-679	Clips W-1500 and W-1501 together									
H-1608	CLAMP: cable; steel, nickel pl; one bolt employed; approx 2-3/4" lg x 1-1/8" wd x 3/8" thk o/a; accommodates 3/4" cable; elongated hole one arm, body hole other arm	Secures W-1501 to H-1609		N17-T-350011-349	CTT	99373	99373	H-1608,H-1762	3	0	0
H-1609	Same as H-1606	Supports A-1508									
H-1610	Same as H-693	Secures H-1608 to H-1609									
H-1611	Same as H-302	Secures H-1608 to H-1609									
H-1612	PLATE, nut: steel, nickel pl; rectangular shape; approx 3-1/4" lg x 3/8" wd x 3/32" thk o/a; two mtg holes #6-40 thd	Locks A-1510 to A-1509		4T129257 N17-T-350016-257	CTT	129257	129257	H-1612,H-1769	3	0	0
H-1613	Same as H-307	Secures A-1510 to H-1612 or A-1508 to H-1609 or A-1508 to A-1512 or A-1509 to H-1606									
H-1614	Same as H-302	Secures A-1510 to H-1612 or A-1508 to H-1609 or A-1508 to A-1512 or A-1509 to H-1602									

H-1615	Same as H-319	Secures A-1510 to H-1612 or A-1508 to H-1609 or A-1508 to A-1512 or A-1509 to H-1602								
H-1616	WASHER, flat: steel, nickel pl; round, approx 7/16" OD x 5/32" ID x 1/32" thk o/a	Secures A-1510 to H-1619	N17-T-350013-202 1730-483714000	CTT	76099	76099	H-1616,H-1773	6	0	0
H-1617	Same as H-302	Secures A-1510 to H-1619								
H-1618	Same as H-987	Secures A-1510 to H-1619								
H-1619	BRACKET: side plate; "L" shape; steel, nickel pl; approx 3-9/16" lg x 5/8" wd x 5/8" d o/a; mts by one 5/32" hole; two #6-40 thd holes	Supports A-1510	*1	CTT	129340	129340	H-1619,H-1777	3	0	0
H-1620	SCREW, machine: slot drive; flat Fil H; steel, nickel pl; #4-40 thd; approx 7/16" lg o/a; threaded portion 7/32" lg; 3/32" thk x 1/4" diam head; shoulder 5/32" diam x 1/8" lg	Secures A-1511 to A-1512	N17-T-350001-136	CTT	112621	112621	H-1620,H-1780	3	1	6
H-1621	Same as H-319	Secures A-1512 to H-1624 or H-1609								
H-1622	Same as H-302	Secures A-1512 to H-1624 or H-1609								
H-1623	Same as H-307	Secures to A-1512 to H-1624 or H-1609								
H-1624	Same as H-1606	Supports A-1512								
H-1625	WASHER, spring: steel; round, approx 3/8" OD x 3/32" ID x 1/16" wd o/a, 0.020" thk material; curved from ctr in two places	Secures A-1511 to A-1512	N17-T-350009-301	CTT	83561	83561	H-1625,H-1781	3	1	6
H-1626	Same as H-888	Secures A-1511 to A-1512								
H-1627	Same as H-325	Secures A-1511 to A-1512								
H-1628	Same as H-316	Secures A-1511 to A-1512								
H-1629	Same as H-307	Secures A-1508 to H-1632 and H-1609								
H-1630	Same as H-302	Secures A-1508 to H-1632 and H-1609								
H-1631	Same as H-319	Secures A-1508 to H-1632 and H-1609								

*1 Low Failure item - if required requisition from NSO referencing Navships 900,180A

TABLE 8-4. COMBINED PARTS AND SPARE PARTS LIST

PARTS										EQUIPMENT SPARE PARTS	
SYMBOL DESIG.	NAME OF PART AND DESCRIPTION	FUNCTION	JAN OR NAVY TYPE DESIG.	SIGNAL CORPS STANDARD NAVY, AIR FORCE STOCK NO.	MANUFACTURERS CODE	MANUFACTURERS DESIG.	TELETYPE PART NO.	ALL SYMBOL DESIGNATIONS INVOLVED	TOTAL NO. PER EQUIP.	BOX	QUAN
H-1632	POST: steel, nickel pl; approx 3" lg x 3/8" sq o/a; mts by axial tapped hole; two tapped holes through each side	Supports A-1509 and A-1508		N17-T-350012-251	CTT	110703	110703	H-1632,H-1768	3	0	0
H-1633	Same as H-302	Secures H-1632, H-1608, H-1609, H-1624 and H-1635 to A-1501									
H-1634	Same as H-650	Secures H-1632, H-1608, H-1609, H-1624 and H-1635 to A-1501									
H-1635	Same as H-1606	Supports A-1513									
H-1636	Same as H-1066	Secures H-1645 to A-1513									
H-1637	Same as H-1346	Secures H-1645 to A-1513									
H-1638	Same as H-746	Secures A-1507 to O-1529									
H-1639	Same as H-402	Secures A-1507 to O-1529									
H-1640	Same as H-403	Secures A-1507 to O-1529									
H-1641	SCREW, machine: slot drive; RH; brass; #2-56 thd; approx 5/16" lg o/a; threaded portion 1/4" lg; head 1/16" lg x 5/32" diam	Secures N-1500 to A-1513		N17-T-350002-118	CTT	78474	78474	H-1641,H-1793	6	1	12
H-1642	Same as H-319	Secures A-1513 to A-1504									
H-1643	Same as H-302	Secures A-1513 to A-1504									
H-1644	Same as H-307	Secures A-1513 to A-1504									
H-1645	GUARD: steel; "U" shaped; approx 1-11/16" lg, 15/16" wd, 3/16" diam o/a; two tapped mtg holes #4-40 thd x 5/16" d in ends	Protects S-1500 from accidental use		*1	CTT	129345	129345	H-1645,H-1796	3	0	0
H-1646	Same as H-987	Secures A-1514 to A-1513 and A-1509									
H-1647	Same as H-302	Secures A-1514 to A-1513 and A-1509									

H-1648	Same as H-320	Secures A-1514 to A-1513 and A-1509									
H-1649	Same as H-987	Secures A-1515, A-1516 and A-1517 to distributor-transmitters									
H-1650	Same as H-302	Secures A-1515, A-1516 and A-1517 to distributor-transmitters									
H-1651	Same as H-987	Secures A-1515, A-1516 and A-1517 to distributor-transmitters									
H-1652	Same as H-302	Secures A-1515, A-1516 and A-1517 to distributor-transmitters									
H-1653	Same as H-303	Secures A-1520 to A-1518									
H-1654	Same as H-302	Secures A-1520 to A-1518									
H-1655	Same as H-987	Secures A-1518 to A-1501									
H-1656	Same as H-302	Secures A-1518 to A-1501									
H-1657	PIN: steel, nickel pl; approx 1-3/8" lg x 3/16" diam o/a; one end threaded 5/32" lg, w/#6-40 thd, other end slotted	Provides guide for number tape	4T117845 N17-T-350016-437	CTT	117845	117845	H-1657	3	0	0
H-1658	Same as H-741	Secures H-1657 to O-1549								
H-1659	SCREW, machine: slot drive; cheese H; steel, nickel pl; #6-40 thd; approx 9/32" lg o/a; threaded portion 1/8" lg; head 3/32" lg x 1/4" diam; shoulder 1/16" lg x 3/16" diam	Secures O-1549 to A-1520	N17-T-350005-507	CTT	1010	1010	H-1659	3	0	0
H-1660	NUT, lock: elastic stop nut type; steel, cad pl; #6-40 thd; 3/16" thk o/a; 5/16" across flats	Secures H-1661 to A-1518	Procured on demand by nearest Naval Shore Supply Activity	ESNA	22M-60	152426	H-1660,H-1757	10	0	0
H-1661	SCREW, machine: slot drive; FH binding H; steel, nickel pl; #6-40 thd; 3/4" lg; 11/16" lg threaded portion; 1/16" thk x 1/4" diam head	Secures A-1518 to distributor-transmitters	N17-T-350016-405	CTT	115529	115529	H-1661	6	0	0
			*1 Low Failure item-if required req-uisition from ESO referencing NavShips 900,180A							

TABLE 8-4. COMBINED PARTS AND SPARE PARTS LIST

PARTS									EQUIPMENT SPARE PARTS	
SYMBOL DESIG.	NAME OF PART AND DESCRIPTION	FUNCTION	JAN OR NAVY TYPE DESIG.	SIGNAL CORPS STANDARD NAVY, AIR FORCE STOCK NO.	MANUFACTURERS CODE	MANUFACTURERS DESIG.	TELETYPE PART NO.	ALL SYMBOL DESIGNATIONS INVOLVED	TOTAL NO. PER EQUIP.	BOX	QUAN
H-1662	WASHER, lock: steel, nickel pl; round, approx 7/32" OD x 9/64" ID x 0.012" thk o/a; shake proof type, straight internal teeth	Secures A-1519 to A-1518		N17-T-350016-457	CTT	100842	100842	H-1662,H-1759	36	0	0
H-1663	SCREW, machine: slot drive; RH; iron, nickel pl; #3-48 thd; 13/64" lg; 1/8" lg threaded portion; 5/64" thk x 3/16" diam head	Secures A-1519 to A-1518		N17-T-350016-404	CTT	49630	49630	H-1663,H-1760	36	0	0
H-1664	SCREW, machine: slot drive; FH; steel, nickel pl; #6-40 thd; approx 3/8" lg o/a; 5/16" lg threaded portion; head 1/16" thk x 7/32" diam	Secures A-1520 to A-1518		6L6640-5.10S N17-T-350014-242 1730-043601414	CTT	151658	151658	H-1664	3	0	0
H-1665	Same as H-816	Secures H-1666 to A-1520									
H-1666	POST, spring: steel, nickel pl; approx 3/8" lg x 1/8" diam o/a; mts by #4-40 threaded shank	Anchors 0-1550		N17-T-350002-228	CTT	80294	80294	H-1666	3	0	0
H-1667	ECCENTRIC: steel, nickel pl; approx 3/32" thk x 7/16" diam; mts by 9/64" eccentric hole; face slotted one side	Provides means for adjusting 0-1549		N17-T-350002-658	CTT	85389	85389	H-1667	3	0	0
H-1668	Same as H-320	Secures H-1667 to A-1520									
H-1669	Same as H-302	Secures H-1667 to A-1520									
H-1670	Same as H-453	Secures H-1667 to A-1520									
H-1671	SCREW, machine: slot drive; FH; steel, nickel pl; #6-32 thd; approx 1-1/16" lg o/a; threaded portion 1/4" lg; head 5/64" lg x 17/64" diam	Secures 0-1553 and 0-1552 to 0-1551		N17-T-350009-677	CTT	88802	88802	H-1671	3	0	0
H-1672	WASHER, flat: aluminum; round; approx 1/4" ID x 1-1/8" OD x 1/16" thk o/a	Provides clearance between 0-1551 and A-1520		6L34004-16 N17-T-350016-297	CTT	117848	117848	H-1672,H-1678	6	0	0
H-1673	Same as H-410	Secures H-1679 to A-1520									
H-1674	NUT, cap: brass; #6-32 thd; approx 9/32" h o/a; 5/16" across flats	Secures 0-1552 and 0-1553 to 0-1551		N17-T-350012-936	CTT	116167	116167	H-1674	3	0	0

| | | |

TABLE 8-4. COMBINED PARTS AND SPARE PARTS LIST

PARTS										EQUIPMENT SPARE PARTS	
SYMBOL DESIG.	NAME OF PART AND DESCRIPTION	FUNCTION	JAN OR NAVY TYPE DESIG.	SIGNAL CORPS STANDARD NAVY, AIR FORCE STOCK NO.	MANUFACTURERS CODE	MANUFACTURERS DESIG.	TELETYPE PART NO.	ALL SYMBOL DESIGNATIONS INVOLVED	TOTAL NO. PER EQUIP.	BOX	QUAN
H-1693	SCREW, machine: slot drive; RH; brass; #6-40 thd; 2" lg; approx 2" lg threaded portion; head 7/32" in diam	Secures R-1501 to A-1524		N17-T-350004-592	CTT	110824	110824	H-1693	9	0	0
H-1694	Same as H-320	Secures R-1501 to A-1524									
H-1695	Same as H-602	Secures A-1524 to A-1501									
H-1696	Same as H-302	Secures A-1524 to A-1501									
H-1697	Same as H-1212	Secures N-1500 to A-1513									
H-1698	Same as H-1308	Secures A-1520 to A-1518									
H-1699	Same as H-320	Secures A-1515, A-1516, A-1517 to distributor-transmitters									
H-1700	Same as H-1500	Secures E-1706 and E-1707 to A-1700									
H-1701	Same as H-303	Secures H-1703 and C-1500 to A-1701									
H-1702	Same as H-302	Secures H-1703 and C-1500 to A-1701									
H-1703	Same as H-1503	Secures cable to A-1701									
H-1704	Same as H-403	Secures H-1715 to A-1703									
H-1705	Same as H-302	Secures H-1703 to A-1701									
H-1706	Same as H-320	Secures H-1703 and ground cable to A-1701									
H-1707	Same as H-320	Secures H-1703 and C-1500 to A-1701									
H-1708	Same as H-1049	Secures H-1703 and C-1500 to A-1701									
H-1709	Same as H-302	Secures H-1703 and ground cable to A-1701									
H-1710	Same as H-1343	Secures H-1706 to A-1701									

H-1711	Same as H-302	Secures A-1700 to A-1701									
H-1712	Same as H-1512	Secures A-1700 to A-1701									
H-1713	Same as H-402	Secures A-1702 to A-1701									
H-1714	Same as H-746	Secures A-1702 to A-1701									
H-1715	CLAMP: cable; cellulose plastic; one mtg hole; approx 15/16" lg x 1/2" wd x 1/2" h o/a; accom 3/8" cable	Clamp for W-1700	22642-434 N17-C-78108-951 6700-191150-24	CFW	CPC-742-6	12x246	H-1715	1	0	0	
H-1716	Same as H-402	Secures H-1515 and A-1703 to A-1701 or A-1703 to A-1701									
H-1717	Same as H-746	Secures H-1715 and A-1703 to A-1701									
H-1718	Same as H-302	Secures H-1761, H-1788, H-1730, H-1768 or H-1792 to A-1701									
H-1719	Same as H-746	Secures motor to A-1701									
H-1720	Same as H-402	Secures motor to A-1701									
H-1721	Same as H-1521	Secures motor to A-1701									
H-1722	Same as H-602	Secures motor pinion to shaft									
H-1723	Same as H-302	Secures motor pinion to shaft									
H-1724	Same as H-1526	Protects drive gear on message distributor-transmitter bases									
H-1725	Same as H-602	Secures H-1724 to A-1701									
H-1726	Same as H-302	Secures H-1724 to A-1701									
H-1727	Same as H-1527	Provides means for moving message distributor-transmitter bases									
H-1728	Same as H-302	Secures H-1727 to A-1701									
H-1729	Same as H-1301	Secures H-1727 to A-1701									
H-1730	Same as H-1606	Supports A-1710									

TABLE 8-4. COMBINED PARTS AND SPARE PARTS LIST

PARTS										EQUIPMENT SPARE PARTS	
SYMBOL DESIG.	NAME OF PART AND DESCRIPTION	FUNCTION	JAN OR NAVY TYPE DESIG.	SIGNAL CORPS STANDARD NAVY, AIR FORCE STOCK NO.	MANUFACTURERS CODE	MANUFACTURERS DESIG.	TELETYPE PART NO.	ALL SYMBOL DESIGNATIONS INVOLVED	TOTAL NO. PER EQUIP.	BOX	QUAN
H-1731	Same as H-650	Secures H-1761, H-1788, H-1730, H-1768 or H-1792 to A-1701									
H-1732	Same as H-302	Secures A-1704 to A-1701									
H-1733	Same as H-650	Secures A-1704 to A-1701									
H-1734	SCREW, machine: slot drive; Fil H; steel, nickel pl; #10-32 thd; approx 1-17/32" lg o/a; threaded portion 1-1/4" lg; head 11/64" lg x 5/16" diam	Secures 0-1706 and 0-1707 to A-1701 or 0-1716 and 0-1717 to A-1701		N17-T-350013-110	CTT	1258	1258	H-1734	12	0	0
H-1735	Same as H-402	Secures 0-1706 and A-1707 to A-1701									
H-1736	Same as H-1595	Secures 0-1704 to 0-1715									
H-1737	Same as H-1058	Secures 0-1705 or 0-1709 to 0-1715									
H-1738	Same as H-302	Secures 0-1705 or 0-1709 to 0-1715									
H-1740	Same as H-1593	Secures identification cards on message bases									
H-1741	Same as H-1601	Secures 0-1708 to 0-1705, 0-1710 to 0-1709, or 0-1714 to 0-1720									
H-1742	Same as H-1370	Secures 0-1708 to 0-1705, 0-1710 to 0-1709, or 0-1714 to 0-1720									
H-1743	Same as H-1177	Secures drive gear to 0-1730									
H-1744	Same as H-302	Secures drive gear to 0-1730									
H-1745	Same as H-1058	Secures 0-1720 or 0-1730 to 0-1715									
H-1746	Same as H-302	Secures 0-1720 or 0-1730 to 0-1715									
H-1747	Same as H-1304	Secures 0-1721 to A-1701									

H-1748	Same as H-402	Secures O-1721 to A-1701							4
H-1749	Same as H-987	Secures A-1705 to A-1701							1
H-1750	Same as H-302	Secures A-1705 to A-1701							4
H-1751	Same as H-320	Secures A-1705 to A-1701							
H-1752	Same as H-319	Secures A-1706 to A-1705 and A-1705 to transmitters							
H-1753	Same as H-302	Secures A-1706 to A-1705 and A-1705 to transmitters							
H-1754	Same as H-320	Secures A-1706 to A-1705 and A-1705 to transmitters							
H-1755	Same as H-302	Secures A-1707 to A-1701							
H-1756	Same as H-987	Secures A-1707 to A-1701							
H-1757	Same as H-1660	Secures H-1758 to A-1707							
H-1758	SCREW, thumb: knurled thumb head; steel, nickel pl; #6-40 thd; approx 1-1/8" lg under head; threaded portion 3/8" lg; flat point; head 7/16" diam, 5/16" thk; shoulder 1/4" diam x 1/16" lg; shank 11/16" lg x 3/32" diam	Secures A-1707 to distributor-transmitters		6L1706-18.8K N17-T-350016-279	CTT	129256	129256	H-1758	4
H-1759	Same as H-1662	Secures A-1708 to A-1707							
H-1760	Same as H-1663	Secures A-1708 to A-1707							
H-1761	Same as H-1606	Supports H-1762, A-1709 and A-1713							
H-1762	Same as H-1608	Secures W-1701 to H-1761							
H-1763	Same as H-302	Secures H-1762 to H-1761							
H-1764	Same as H-693	Secures H-1762 to H-1761							
H-1765	Same as H-319	Secures A-1709 to H-1768 and H-1761							
H-1766	Same as H-302	Secures A-1709 to H-1768 and H-1761							
H-1767	Same as H-307	Secures A-1709 to H-1768 and H-1761							

TABLE 8-4. COMBINED PARTS AND SPARE PARTS LIST

PARTS										EQUIPMENT SPARE PARTS	
SYMBOL DESIG.	NAME OF PART AND DESCRIPTION	FUNCTION	JAN OR NAVY TYPE DESIG.	SIGNAL CORPS STANDARD NAVY, AIR FORCE STOCK NO.	MANUFACTURERS CODE	MANUFACTURERS DESIG.	TELETYPE PART NO.	ALL SYMBOL DESIGNATIONS INVOLVED	TOTAL NO. PER EQUIP.	BOX	QUAN
H-1768	Same as H-1632	Supports A-1709 and A-1710									
H-1769	Same as H-1612	Locks A-1711 to A-1710									
H-1770	Same as H-307	Secures A-1711 to H-1769, A-1710 to H-1768 and H-1730									
H-1771	Same as H-302	Secures A-1711 to H-1769, A-1710 to H-1768 and H-1730									
H-1772	Same as H-319	Secures A-1711 to H-1769, A-1710 to H-1768 and H-1730									
H-1773	Same as H-1616	Secures A-1711 to H-1777									
H-1774	Same as H-302	Secures A-1711 to H-1777									
H-1775	Same as H-987	Secures A-1711 to H-1777									
H-1776	Same as H-731	Secures H-1777 to A-1701									
H-1777	Same as H-1619	Supports A-1711									
H-1778	Same as H-302	Secures H-1777 to A-1701									
H-1779	Same as H-303	Secures H-1777 to A-1701									
H-1780	Same as H-1620	Secures A-1712 to A-1713									
H-1781	Same as H-1625	Secures A-1712 to A-1713									
H-1782	Same as H-888	Secures A-1712 to A-1713									
H-1783	Same as H-325	Secures A-1712 to A-1713									
H-1784	Same as H-316	Secures A-1712 to A-1713									
H-1785	Same as H-319	Secures A-1713 to H-1788, H-1761 and A-1709									

H-1786	Same as H-302	Secures A-1713 to H-1788, H-1761 and A-1709										
H-1787	Same as H-307	Secures A-1713 to H-1788, H-1761 and A-1709										
H-1788	Same as H-1606	Supports A-1713										
H-1789	Same as H-319	Secures A-1714 to H-1792 and A-1704										
H-1790	Same as H-302	Secures A-1714 to H-1792 and A-1704										
H-1791	Same as H-307	Secures A-1714 to H-1792 and A-1704										
H-1792	Same as H-1606	Supports A-1714										
H-1793	Same as H-1641	Secures N-1700 to A-1714										
H-1794	Same as H-1199	Secures N-1700 to A-1714										
H-1795	Same as H-1212	Secures N-1700 to A-1714										
H-1796	Same as H-1645	Protects S-1700 from accidental use										
H-1797	Same as H-1066	Secures H-1796 to A-1714										
H-1798	Same as H-1346	Secures H-1796 to A-1714										
H-1799	Same as H-320	Secures H-1724 to A-1701										
H-1802	NUT, hexagon: steel, cad pl; #6-32 thd; 3/32" thk; 1/4" across flats	Secures screw in cover	*1				CYG	38051	H-1802	3	0	0
H-1803	SCREW, machine: slot drive; flat Fil H; SS: #5-40 thd; 5/16" lg o/a; threaded portion 5/32" lg; 1/16" thk x 9/32" diam head; shoulder 3/16" diam x 1/16" lg	Secures A-1800 to cover	*1				CYG	79058	H-1803	3	0	0
H-1804	WASHER, spring: steel, blued; round, 3/16" ID, 13/32" OD, 3/64" thk o/a	Secures A-1800 to cover	*1				CYG	18323	H-1804	3	0	0

*1 Low Failure item - if required requisition from ESO referencing NavShips 900,180A

TABLE 8-4. COMBINED PARTS AND SPARE PARTS LIST

PARTS										EQUIPMENT SPARE PARTS	
SYMBOL DESIG.	NAME OF PART AND DESCRIPTION	FUNCTION	JAN OR NAVY TYPE DESIG.	SIGNAL CORPS STANDARD NAVY, AIR FORCE STOCK NO.	MANUFACTURERS CODE	MANUFACTURERS DESIG.	TELETYPE PART NO.	ALL SYMBOL DESIGNATIONS INVOLVED	TOTAL NO. PER EQUIP.	BOX	QUAN
H-1805	SCREW, thumb: knurled thumb head; steel, cad pl; #10-32 thd; approx 37/64" lg; threaded portion 13/64" lg; flat point; head 5/32" lg x 1/2" diam; shoulder 11/32" lg x 1/4" diam; slot across head	Secures 0-1800 to time stamp		6L17110-9.8K2 N17-T-350016-324	CYG	59154	128280	H-1805	6	1	3
H-1807	COLLAR, drive shaft: brass; approx 1/4" lg x 5/16" OD x 5/32" ID; mts by ID; #6-32 thd radial hole to ID	Secures shaft to side frame		*1	CYG	33648		H-1807	3	0	0
H-1808	NUT, hexagon: steel, cad pl; #5-40 thd; 1/8" thk; 5/16" wd across flats	Secures H-1809 to side frame		*1	CYG	23815		H-1808	3	0	0
H-1809	STUD: steel, cad pl; approx 19/32" lg x 1/16" diam o/a; eccentric shank 1/4" lg, threaded portion 1/8" lg w/#5-40 thd drive slot in opposite end	Stop for 0-1810		*1	CYG	58523		H-1809	3	0	0
H-1810	WASHER, lock: steel, cad pl; round, 3/16" ID, 3/8" OD, 0.022" thk o/a; shakeproof type, twisted internal teeth	Secures side frame to tiepost		*1	CYG	56121		H-1810,H-1812 H-1829,H-1839 H-1845,H-1848 H-1852	30	0	0
H-1812	Same as H-1810	Secures A-1804 to side frame									
H-1814	NUT, hexagon: steel, cad pl; #5-40 thd; 3/32" thk; 1/4" wd across flats	Secures S-1800 to A-1804		*1	CYG	7341		H-1814,H-1872	12	0	0
H-1816	SCREW, machine: slot drive; RH; brass; #5-40thd; approx 15/32" lg o/a; threaded portion 21/64" lg; head 3/32" thk x 15/64" diam	Secures S-1800 to A-1804		*1	CYG	24534		H-1816,H-1870	12	0	0
H-1817	SCREW, machine: slot drive; Fil H; steel, cad pl; #4-40 thd; approx 19/64" lg o/a; threaded portion 9/64" lg; head 7/64" lg x 3/16" diam	Secures 0-1806 to 0-1810		*1	CYG	38261		H-1817,H-1822	9	0	0
H-1820	SCREW, machine: slot drive; Fil H; steel, cad pl; #14-24 thd; approx 63/64" lg o/a; threaded portion 43/64" lg; head 15/64" lg x 27/64" diam; flange 5/64" lg	Secures A-1805 to side frame		*1	CYG	1709		H-1820,H-1831	12	0	0
H-1822	Same as H-1817	Secures 0-1808 to 0-1844									

H-1824	SCREW, machine: slot drive; F11 H; steel, cad pl; #5-40 thd; approx 3/8" lg o/a; threaded portion 13/64" lg; head 1/8" lg x 13/64" diam	Secures 0-1803 to side frame	*1	CYG	4236		H-1824	3	0	0
H-1826	PIN, drive: brass; approx 9/32" lg x 7/64" diam o/a; mts by body; shank 5/32" lg x 5/64" diam	Locates 0-1852 on 0-1851	N17-T-350016-359	CYG	12138-S38	129706	H-1826	3	0	0
H-1827	NUT, hexagon: brass; #8-32 thd; 1/8" thk; 3/8" wd across flats	Secures 0-1813 to 0-1820	*1	CYG	123		H-1827	3	0	0
H-1828	RING, retainer: steel; rounded one end, irregularly cut out from other end; approx 5/16" lg x 9/32" wd x 0.020" thk o/a; mts by ctr cutout; for 3/32" diam shaft slot	Secures 0-1814 to 0-1811	*1	CYG	147297		H-1828,H-1843 H-1844	9	0	0
H-1829	Same as H-1810	Secures side frame to frame tiepost								
H-1830	STUD: steel, nickel pl; approx 17/32" lg x 5/8" diam o/a; shoulder 7/32" diam x 3/8" lg; one end threaded #8-32, 1/4" lg; neck between head and shoulder, neck between shoulder and threaded portion head has center csk hole and two body holes	Provides support and pivot for 0-1820	N17-T-350016-328	CYG	58386	129717	H-1830	6	0	0
H-1831	Same as H-1820	Secures side frame to base								
H-1834	SCREW, machine: slot drive; F11 H; steel, cad pl; #3-48 thd; approx 11/32" lg o/a; 13/64" lg threaded portion; 3/32" thk x 5/32" diam head	Secures 0-1816 and 0-1815 to side frame	*1	CYG	2650		H-1834	6	0	0
H-1835	PLATE, lock: steel, cad pl; approx 3/4" lg x 1/2" wd x 1/16" thk o/a; mts by body hole; triangular slot in body	Secures 0-1817 to 0-1811	*1	CYG	72506		H-1835	3	0	0
H-1836	SCREW, machine: slot drive; F11 H; steel, cad pl; #2-56 thd; approx 11/32" lg o/a; threaded portion 7/32" lg; head 3/32" lg x 9/64" diam	Secures 0-1817 and H-1835 to 0-811	*1	CYG	203		H-1836	3	0	0
H-1838	SCREW, machine: F11 H; slot drive; steel, cad pl; #2-56 thd; approx 7/32" lg o/a; threaded portion 3/32" lg; head 5/64" lg x 9/64" diam	Secures 0-1819 to A-1806	*1	CYG	38245		H-1838,H-1851	18	0	0
			*1 Low Failure item - if required requisition from ESO referencing NavShips 900,180A							

TABLE 8-4. COMBINED PARTS AND SPARE PARTS LIST

PARTS										EQUIPMENT SPARE PARTS	
SYMBOL DESIG.	NAME OF PART AND DESCRIPTION	FUNCTION	JAN OR NAVY TYPE DESIG.	SIGNAL CORPS STANDARD NAVY, AIR FORCE STOCK NO.	MANUFACTURERS CODE	MANUFACTURERS DESIG.	TELETYPE PART NO.	ALL SYMBOL DESIGNATIONS INVOLVED	TOTAL NO. PER EQUIP.	BOX	QUAN
H-1839	Same as H-1810	Secures A-1806 to side frame									
H-1841	SCREW, machine: slot drive; flat Fil H; steel, cad pl; #4-24 thd; approx 27/32" lg o/a; threaded portion 21/32" lg; head 5/32" lg x 25/64" diam; flange 1/32" lg	Secures side frame to base		*1	CYG	22356		H-1841	3	0	0
H-1842	STUD: steel; 9/16" lg x 7/32" across hexagon flats; one end threaded 3/16" lg w/#8-32 thd, other end tapped 1/4" d w/#2-56 thd	Supports and provides pivot for 0-1811		*1	CYG	59975		H-1842	3	0	0
H-1843	Same as H-1828	Secure frame tiepost									
H-1844	Same as H-1828	Secure frame tiepost									
H-1845	Same as H-1810	Secures side frame to frame tiepost									
H-1847	NUT, hexagon: steel, cad pl; #10-32 thd; 7/64" thk; 5/16" wd across flats	Secures A-1808 to side frame		*1	CYG	221		H-1847,H-1853 H-1865	18	0	0
H-1848	Same as H-1810	Secures A-1808 to side frame									
H-1849	WASHER, flat: steel, cad pl; round, 13/64" ID, 7/16" OD, 1/32" thk	Secures A-1808 to side frame		*1	CYG	45690		H-1849	6	0	0
H-1850	SCREW, set: bristol drive, multiple spline; headless; steel, cad pl; #10-32 thd; approx 7/8" lg o/a; oval point	Secures A-1808 to side frame		N17-T-350017-0515	CYG	58865	129724	H-1850	6	0	0
H-1851	Same as H-1838	Secures 0-1823 to A-1808									
H-1852	Same as H-1810	Secures A-1808 to side frame									
H-1853	Same as H-1847	Secures A-1808 to side frame									
H-1855	SCREW, machine: slot drive; RH; steel, cad pl; #3-48 thd; approx 21/64" lg o/a; threaded portion approx 13/64" lg; head 5/64" lg x 3/16" diam; flange 3/64" lg	Secures A-1809 to time stamp		*1	CYG	2863		H-1855	6	0	0
H-1856	NUT, hexagon: brass; 3/8"-32 thd; 9/64" thk; 1/2" wd across flats	Holds type wheel assembly together		*1	CYG	53923		H-1856	3	0	0

H-1857	POST, spacing: steel; cad pl; approx 1-3/4" lg x 3/8" diam o/a; mts by a short shank ea end; #10-32 radial tapped hole through middle	Supports time stamp side frame	*1	CYG	12138-S30	H-1857	3	0	0	
H-1858	POST, spacing: steel, cad pl; approx 2" lg x 3/8" diam o/a; mts by #10-32 tapped hole ea end; shoulder 1/8" lg x 1/4" diam ea end	Supports time stamp side frames	*1	CYG	58412	H-1858	3	0	0	
H-1859	SCREW, machine: slot drive; RH; steel, black finish; #5-40 thd; 15/64" lg o/a; threaded portion 1/8" lg; 7/64" thk x 7/32" diam head; undercut below head	Secures 0-1842 to	*1	CYG	135172	H-1859	3	0	0	
H-1860	SCREW, machine: slot drive; flat, Fil H; steel; 1/16"-64; 5/32" lg; threaded portion 1/8" lg; head 1/32" thk x 3/32" diam	Secures sprocket to 0-1847	*1	CYG	33876	H-1860	3	0	0	
H-1861	SPACER: steel, cad pl; approx 7/32" lg x 3/8" OD x 3/16" ID o/a; mts by ID; rounded one end	Provides clearance between B-1800 side frame	*1	CYG	58569	H-1861	6	0	0	
H-1862	STUD: brass; 1-1/16" lg x 5/16" across hexagon flats; one end threaded 7/32" lg w/#10-32 thd, other end threaded 9/16" lg w/#10-32 thd	Secures B-1800 and A-1812 to side frame	*1	CYG	62190	H-1862	3	0	0	
H-1864	STUD: brass; 1-5/16" lg x 5/16" across hexagon flats; one end threaded 3/4" lg w/#10-32 thd, other end threaded 13/64" lg w/#10-32 thd	Secures A-1812 and B-1800 to side frame	*1	CYG	62189	H-1864	3	0	0	
H-1865	Same as H-1847	Secures A-1813 to side frame								
H-1867	RING, retainer: steel, blued; round, irregular cutout from circum; approx 5/16" diam x 0.015" thk o/a; mts by three lips in ctr cutout; for 1/8" diam shaft slot	Secures 0-1814 to ribbon feed lever	*1	CYG	25282	H-1867,H-1883	6	0	0	
H-1870	Same as H-1816	Secures S-1801 to A-1817								
H-1872	Same as H-1814	Secures S-1801 to A-1817								
H-1876	SCREW, machine: slot drive; Fil H; steel, cad pl; #3-48 thd; approx 7/32" lg o/a; threaded portion approx 3/32" lg; head 3/32" lg x 5/32" diam; flange 3/64" lg	Secures 0-1855 to A-1818	*1	CYG	2627	H-1876	6	0	0	

*1 Low Failure item - if required requisition from ESO referencing NavShips 900,180A

TABLE 8-4. COMBINED PARTS AND SPARE PARTS LIST

PARTS									EQUIPMENT SPARE PARTS	
SYMBOL DESIG.	NAME OF PART AND DESCRIPTION	FUNCTION	JAN OR NAVY TYPE DESIG.	SIGNAL CORPS STANDARD NAVY, AIR FORCE STOCK NO.	MANUFACTURERS CODE	MANUFACTURERS DESIG.	TELETYPE PART NO.	ALL SYMBOL DESIGNATIONS INVOLVED	TOTAL NO. PER EQUIP.	BOX	QUAN
H-1880	CLAMP: condenser; fish paper; two bolts employed; 2-3/4" lg x 3/4" wd x 0.015" thk o/a	Secures C-1800 to A-1818		*1	CYG	12138-S8		H-1880	3	0	0
H-1883	Same as H-1867	Secures 0-1860									
H-1885	SCREW, machine: slot drive; Fil H; steel, cad pl; #6-40 thd; approx 5/8" lg o/a; threaded portion 7/16" lg; head 1/8" lg x 17/64" diam	Secures TB-1800 to base		*1	CYG	54686		H-1885	6	0	0
H-1886	NUT, hexagon: steel, cad pl; #8-32 thd; 3/32" thk; 1/4" wd across flats	Secures base to cover		*1	CYG	6503		H-1886	12	0	0
H-1889	RING, retainer: steel, cad pl; rounded one end, irregularly cutout from other end; approx 9/16" lg x 1/2" wd x 0.020" thk o/a; mts by ctr cutout; for 3/16" diam shaft slot	Secures fork plate assembly to base		*1	CYG	60488		H-1889	6	0	0
H-1901	Same as H-1220	Secures E-1902 and 0-1903 to A-1901									
H-1902	Same as H-302	Secures E-102 and 0-103 to A-101									
H-1903	Same as H-320	Secures E-1902 and 0-1903 to A-1901									
H-1904	Same as H-987	Secures 0-1903 to A-1901									
H-1905	Same as H-302	Secures 0-1903 to A-1901									
H-1906	Same as H-1220	Secures 0-1901 to A-1902									
H-1907	Same as H-302	Secures 0-1901 to A-1902									
H-1908	Same as H-824	Secures 0-1901 to A-1902									
H-1909	Same as H-987	Secures A-1902 to A-1903									
H-1910	Same as H-302	Secures A-1902 to A-1903									
H-1911	Same as H-987	Secures 0-1904 to A-1904									
H-1912	Same as H-302	Secures 0-1904 to A-1904									

H-1913	Same as H-987	Secures A-1902 to A-1905									
H-1914	Same as H-302	Secures A-1902 to A-1905									
H-1915	SCREW: slot drive; FIl H; steel, nickel pl; #4-40 thd; approx 1" lg o/a; 7/8" threaded portion	Secures E-1901, E-1903, E-1904, E-1905, E-1906 and O-1908 to A-1905	N17-T-350010-375	CTT	93112	93112	H-1915	8	0	0	
H-1916	Same as H-325	Secures E-1901, E-1903, E-1904, E-1905, E-1906 and O-1908 to A-1905									
H-1917	POST, spring: slot drive; cheese H; screw steel; #6-40 thd; approx 19/32" lg o/a; threaded portion approx 3/16" lg; 3/32" thk x 5/32" diam head; 5/32" diam x 9/32" lg shoulder; 1/32" d x 1/32" lg groove	Secures O-1906	N17-T-350001-869	CTT	74692	74692	H-1917	4	0	0	
H-1930	Same as H-340	Post for reperforator shelf shock mount									
H-1931	THUMB NUT: steel, nickel pl; #10-32 x 1 1/2" lg thd; 5/8" thk o/a; 1" OD; knurled OD	Nut for reperforator shelf lock	N17-T-350004-212	CTT	103025	103025	H-1931	1	0	0	
H-1932	Same as H-341	Washer for door latch screw									
H-1933	Same as H-342	Stud for reperforator shelf shock mount									
H-1934	Same as H-343	Nut for cabinet wireway screws									
H-1935	Same as H-344	Nut for cabinet door									
H-1936	Same as H-606	Screw to stop patch frame on slide rails									
H-1937	POST: steel, nickel pl; approx 1/2" lg x 1/4" diam o/a; one end threaded 7/32" lg w/#10-32 thd; drive slot at one end	Post for reperforator shock mount	4T117825 N17-T-350016-211	CTT	117825	117825	H-1937	5	0	0	
H-1938	Same as H-345	Stud for reperforator shock mount									
H-1989	WASHER, flat: steel, nickel pl; round, 11/64" ID x 7/16" OD x 0.040" thk o/a	Secures A-1999 to patching frame base	6L58025-81 N16-W-80001-375	CTT	93588	93588	H-1989	4	0	0	
			*1 Low Failure item - if required requisition from ESO referencing NavShips 900,180A								

TABLE 8-4. COMBINED PARTS AND SPARE PARTS LIST

PARTS										EQUIPMENT SPARE PARTS	
SYMBOL DESIG.	NAME OF PART AND DESCRIPTION	FUNCTION	JAN OR NAVY TYPE DESIG.	SIGNAL CORPS STANDARD NAVY, AIR FORCE STOCK NO.	MANUFACTURERS CODE	MANUFACTURERS DESIG.	TELETYPE PART NO.	ALL SYMBOL DESIGNATIONS INVOLVED	TOTAL NO. PER EQUIP.	BOX	QUAN
H-1990	SCREW, machine: slot and wrench drive; hex H; steel, nickel pl; #8-32 thd; approx 5/8" lg; threaded portion 1/2" lg; head 1/8" lg x 1/4" across flats	Secures A-1999 to patching frame base		6L6832-10.81N N17-T-350016-681	CTT	121021	121021	H-1990	4	0	0
H-1991	WASHER, flat: steel, nickel pl; round, 3/8" OD x 1/4" ID x 0.090" thk o/a	Provides mounting for A-1998		6L58024-147 N17-T-350016-709	CTT	116132	116132	H-1991	4	0	0
H-1992	SCREW, machine: slot drive; OH; steel, nickel pl; 1/4"-32; 9/16" lg; threaded portion 7/32" lg; head 3/32" lg x 9/16" diam; shoulder 3/32" lg x 3/8" diam	Provides mounting for A-1998		6L784.5-1 N17-T-350016-716	CTT	116082	116082	H-1992	4	0	0
H-1993	BOLT, machine: wrench drive; hex H w/rounded top; steel, nickel pl; #10-32 thd; 1-33/64" lg o/a; threaded portion 5/16" lg incl neck; head 9/32" lg o/a, hexagon portion 5/64" lg x 7/16" wd across flats; shoulder 59/64" lg x 1/4" diam	Secures tape container mounting bar		6L800-1.5 N17-T-350016-686	CTT	128577	128577	H-1993	8	0	0
H-1994	LATCH, fastener: steel, nickel pl; "U" formed; 1-1/8" lg x 2" wd x 5/8" h o/a; mts by two holes 1-1/2" c to c in mtg ears	Upper latch for rear doors		4T129077 N17-T-350016-673	CTT	129077	129077	H-1994	2	0	0
H-1995	WASHER, lock: steel; round, 7/64" ID x 7/32" OD x 1/16" thk o/a; split-ring type	Secures upper front panel designation strip		6L71102 N17-T-350016-672	CTT	61085	61085	H-1995	4	0	0
H-1996	LATCH, fastener: SS latch and handle, mtg bracket cad pl; push actuated handle latch, spring and mtg bracket assembled by riveted shaft; approx 2-1/16" lg x 1-3/8" wd x 13/16" h o/a; mts by four holes in mtg ears on 9/16" x 1" mtg/c	Latch for front doors		4T117861 N17-T-350016-674	CTT	117861	117861	H-1996	2	0	0
H-1997	SCREW, machine: slot drive; RH; steel, nickel pl; #8-32 thd; approx 2-1/4" lg; threaded portion 2" lg; head 1/8" lg x 1/4" diam	Secures cable clamps and E-1998 to cabinet		6L6832-36.58 N17-T-350016-679	CTT	115537	115537	H-1997	4	0	0
H-1998	WASHER, cup: steel, nickel pl; round, 37/64" OD x 15/64" ID x 7/64" thk o/a; hollow csk type	Secures patching panel to cabinet		6L50244-2 N17-T-350016-678	CTT	115589	115589	H-1998	6	0	0

H-1999	SCREW, machine: slot drive; OH; steel, nickel pl; #10-32 thd; approx 9/16" lg; threaded portion 13/32" lg; head 5/32" lg x 3/8" diam	Secures patching panel to cabinet	6L7032-9.50S N17-T-350016-680	CTT	115590	115590	H-1999	6	0	0
H-2093	SCREW, machine: slot drive; Fil H; steel, zinc and chromate dip; #6-32 thd; approx 1-3/8" lg; threaded portion 1/2" lg; head 1/8" lg x 7/32" diam	Secures E-2099 to patching frame	6L6632-22.3S N17-T-350016-705	CTT	77606	77606	H-2093	12	0	0
H-2094	SCREW, machine: slot drive; FH; steel, nickel pl; #6-32 thd; 1-5/16" lg; threaded portion 3/4" lg; head 5/64" lg x 17/64" diam	Secures distributor-transmitter base mounting shelf to vibration mount	6L6632-21.7S N17-T-350016-695	CTT	128916	128916	H-2094	4	0	0
H-2095	CATCH: steel, nickel pl housing; detenting roller riveted to housing; 1-1/16" lg x 1-9/32" wd x 5/8" h o/a; mts by two elongated slots 15/16" c to c in formed mtg ears	Catch for rear doors	6Z1749-7 N42-C-13393-1355	ACH	40-9710	128892	H-2095	4	0	0
H-2096	WASHER, flat: steel, nickel pl; round, 7/8" OD x 3/16" ID x 0.095" thk o/a; flat on circum 3/16" from ctr	Secures jack strips to patching frame	6L58023-120 N17-T-350016-687	CTT	128888	128888	H-2096	16	0	0
H-2097	SCREW, machine: slot drive; FH; steel, chrome pl; #6-32 thd; approx 5/16" lg; threaded portion 1/4" lg	Secures patching frame rails to cabinet	6L6632-581 N17-T-350016-694	CTT	121020	121020	H-2097	6	0	0
H-2098	STRIKE, fastener: steel, nickel pl; flat strip w/formed rise near ctr and extrusion at striker end; 2" lg x 5/8" wd x 7/16" h o/a; mts by two elongated holes near one end	Striker for H-2095	6Z1749-99 N42-S-26462-2135	ACH	40-9710-C	128893	H-2098	4	0	0
H-2099	SCREW, machine: slot and wrench drive; hex H; steel, nickel pl; 1/4"-20 thd; approx 53/64" lg; threaded portion 29/64" lg; head 1/4" lg x 7/16" across flats	Secures base to cabinet	6L4904-13.81N N17-T-350016-141	CTT	111977	111977	H-2099	6	0	0
H-2101	SCREW, machine: slot drive; flat Fil H; steel, nickel pl; #10-32 thd; 33/64" lg; threaded portion 5/16" lg incl neck; head 3/32" lg x 1/2" diam; shoulder 7/64" lg x 5/16" diam; threaded shank 0.035" eccentric	Pivot for and secures 0-2105 to A-2102	N17-T-350016-718	CTT	129995	129995	H-2101	4	0	0
H-2102	Same as H-402	Secures 0-2105 to A-2102								
H-2103	NUT, hexagon: steel, nickel pl; #10-24 thd; 1/8" thk; 5/16" wd across flats	Secures 0-2105 to A-2102	N17-T-350016-713	CTT	119698	119698	H-2103	4	0	0
H-2104	Same as H-449	Secures 0-2107, 0-2108, 0-2109 and 0-2110 to 0-2105								

TABLE 8-4. COMBINED PARTS AND SPARE PARTS LIST

PARTS										EQUIPMENT SPARE PARTS	
SYMBOL DESIG.	NAME OF PART AND DESCRIPTION	FUNCTION	JAN OR NAVY TYPE DESIG.	SIGNAL CORPS STANDARD NAVY, AIR FORCE STOCK NO.	MANUFACTURERS CODE	MANUFACTURERS DESIG.	TELETYPE PART NO.	ALL SYMBOL DESIGNATIONS INVOLVED	TOTAL NO. PER EQUIP.	BOX	QUAN
H-2105	Same as H-402	Secures 0-2107, 0-2108, 0-2109 and 0-2110 to 0-2105									
H-2106	Same as H-484	Secures A-2102 and 0-2104 to A-811									
H-2107	Same as H-402	Secures A-2102 and 0-2104 to A-811									
I-301	LAMP, neon glow: starting voltage 65 v AC; T-4-1/2 clear bulb; approx 1-1/2" lg o/a; double cont bayonet candelebra base 0.600" diam; burn in any position; 30,000 ohm external resistor required	Open line alarm lamp		G17-L-6811-25	CG	NE48	128911	I-301,I-302 I-1901,I-1902 I-1903,0-1904 I-1905,I-1906 I-1907,I-1908 I-1909,I-1910 I-1911,I-1912 I-1913,I-1914 I-1915,I-1916 I-2001,I-2002 I-2003,I-2004 I-2005,I-2006	22	1	6
I-302	Same as I-301	Tape out lamp									
I-303	LENS, indicating: amber; threaded type; 7/8" diam amber lens; approx 1-3/16" diam x 3/8" thk bezel, 7/8"-32 thd; chrom pl bezel	Lens for I-301		N17-T-350013-639	CEJ	268 and 270	112927	I-303,I-1917 I-2009	7	0	0
I-501	LAMP, glow: 1/25 w; bulb T-3/4 clear; 1-1/8" lg o/a; miniature bayonet base; burn any position	Pilot lamp for PP-987/U		N17-L-6806-130	CG	NE-51	116699	I-501	2	1	2
I-502	LENS, indicator light: clear color; threaded type; plastic, 5/8" diam bulb type; approx 5/8" diam x 1/2" lg o/a, w/9/16"-27 thd 3/16" lg one end; steel, nickel pl; knurled body ring	Covers I-501		226125-104 N17-L-250181-525 7700-527247255	CAYZ	95-937	118384	I-502	2	0	0
I-800	GONG: steel, nickel pl; approx 2-1/2" diam x 3/4" h, 0.065" thk material; mts by body hole	Rings to indicate end of line		N17-T-350001-359	CTT	2610	2610	I-800	7	0	0
I-1901	Same as I-301	Front panel open line alarm lamp for circuit 1									
I-1902	Same as I-301	Front panel open line alarm lamp for circuit 3									
I-1903	Same as I-301	Front panel open line alarm lamp for circuit 5									

I-1904	Same as I-301	Front panel tape out alarm lamp for circuits 1, 3, and 5 reperforators
I-1905	Same as I-301	Rear panel open line alarm lamp for circuit 5
I-1906	Same as I-301	Rear panel open line alarm lamp for circuit 3
I-1907	Same as I-301	Rear panel open line alarm lamp for circuit 1
I-1908	Same as I-301	Rear panel tape out alarm lamp for circuits 1, 3, and 5 reperforators
I-1909	Same as I-301	Rear panel tape out alarm lamp for circuits 2, 4, and 6 reperforators
I-1910	Same as I-301	Rear panel open line alarm lamp for circuit 6
I-1911	Same as I-301	Rear panel open line alarm lamp for circuit 4
I-1912	Same as I-301	Rear panel open line alarm lamp for circuit 2
I-1913	Same as I-301	Front panel open line alarm lamp for circuit 2
I-1914	Same as I-301	Front panel open line alarm lamp for circuit 4
I-1915	Same as I-301	Front panel open line alarm lamp for circuit 6
I-1916	Same as I-301	Front panel tape out alarm lamp for circuits 2, 4, and 6 reperforators
I-1917	Same as I-303	Lens for tape out and open line alarm lamps
I-2001	Same as I-301	Open line alarm lamp for circuit 1
I-2002	Same as I-301	Channel busy lamp for circuit 1
I-2003	Same as I-301	Open line alarm lamp for circuit 2

TABLE 8-4. COMBINED PARTS AND SPARE PARTS LIST

PARTS										EQUIPMENT SPARE PARTS	
SYMBOL DESIG.	NAME OF PART AND DESCRIPTION	FUNCTION	JAN OR NAVY TYPE DESIG.	SIGNAL CORPS STANDARD NAVY, AIR FORCE STOCK NO.	MANUFACTURERS CODE	MANUFACTURERS DESIG.	TELETYPE PART NO.	ALL SYMBOL DESIGNATIONS INVOLVED	TOTAL NO. PER EQUIP.	BOX	QUAN
I-2004	Same as I-301	Channel busy lamp for circuit 2									
I-2005	Same as I-301	Open line alarm lamp for circuit 3									
I-2006	Same as I-301	Channel busy lamp for circuit 3									
I-2008	LENS, indicator: red; threaded 7/8" diam red lens; approx 1-3/16" diam x 3/8" thk bezel; 7/8"-32 thd; chrome pl bezel	Cover for I-2001		N17-L-250681-558	CEJ	268	115320	I-2008	1	0	0
I-2009	Same as I-303	Lens for I-2001									
J-216	JACK, telephone: for two cond 0.25" diam plug; 1-1/4" lg x 1-1/4" wd x 25/32" h o/a; J4 contact arrangement; c/o 3/8"-32 thd bushing, one washer and one hex nut; 3/8" mtg hole	Line jack for measuring line current		275598A89 N17-J-39253-3043 8850-749390	CRA	2A	97143	J-216	3	0	0
J-301	RECEPTACLE: dual, three rectangular pol cont; straight type; approx 4" lg x 11/32" wd x 1" h o/a; 125 v 30 amp; rectangular body; two mtg ears w/elongated mtg hole in ea	Receptacle for circuit 1 reperforator and reeling machine power plugs		N17-C-73747-5904	CHU	7051	102690	J-301,J-303 J-305	6	0	0
J-303	Same as J-301	Receptacle for circuit 2 reperforator and reeling machine power plugs									
J-305	Same as J-301	Receptacle for circuit 3 reperforator and reeling machine power plugs									
J-307	CONNECTOR, female: 15 rectangular female contacts; straight type; approx 1-5/8" lg x 1-11/16" wd x 3/4" h o/a; rectangular body, steel, black crackle paint; molded phenolic insert; mts by two brackets w/5/32" holes; 15 solder lug term	Receptacle for circuit 1 reperforator signal plug		N17-C-73306-6125	CJC	S-315-AB	129208	J-307,J-316 J-317,J-1908 J-1909,J-1910 J-1939,J-1940 J-1941	9	0	0
J-308	JACK: for 1/4" diam three cond plug; approx 3-3/8" lg x 13/16" wd x 15/16" h o/a; J9-2A and 1B cont arrangement; mts in 15/32" diam panel hole	Circuit 1 rerun transmitter circuit jack		4C4884A N17-J-39597-3371	CW	284A	128321	J-308,J-314 J-315	3	0	0

J-309	RECEPTACLE, combination: one side has two female rectangular pol cont, other side has three female rectangular pol cont; straight type; approx 3-3/8" lg x 1-1/2" wd x 1-5/16" thk o/a; ea outlet rated 10 amp 250 v, 15 amp 125 v; black bakelite body, rectangular shape with rounded corners; has two mtg slots; comb two and three wire receptacle	Receptacle for auxiliary equipment and rerun transmitter	N17-C-73747-3566	CHU	7053	124030	J-309,J-310 J-1947,J-2013	3	0	0
J-311	RECEPTACLE, female contact: four wire; four rectangular pol cont; straight type; approx 3-9/16" lg x 1-11/16" wd x 1" h o/a; 125 v, 30 amp; rectangular body; two mtg ears w/elongated mtg hole on ea	Receptacle for circuit 1 time stamp	N17-C-73199-5839	CHU	7250	91862	J-311,J-312 J-313	3	0	0
J-312	Same as J-311	Receptacle for circuit 2 time stamp								
J-313	Same as J-311	Receptacle for circuit 3 time stamp								
J-314	Same as J-308	Circuit 2 rerun transmitter jack								
J-315	Same as J-308	Circuit 3 rerun transmitter jack								
J-316	Same as J-307	Receptacle for circuit 2 reperforator signal plug								
J-317	Same as J-307	Receptacle for circuit 3 reperforator signal plug								
J-318	CONNECTOR, receptacle: AN3102A-28-15P; 35 female round cont	Receptacle for CX-2650/FGC	N17-C-72650-3704	MIL	C-5015	129091	J-318,J-2008	2	0	0
J-700	CONNECTOR, female contact: two rectangular polarized contacts; straight type; approx 21/32" lg less term x 21/32" diam x 1-9/32" wd o/a; 730 v RMS, 10 amps, contact resistance 0.002 ohms; round, molded bakelite body, metal caps black finish; mts by two ears; two solder terms on base, silver pl contacts	Receptacle for P-301 or P-1901	227228.33 N17-C-73124-6696	CJC	S-302-AB	100657	J-700	7	0	0
J-1901	RECEPTACLE, flush: three rectangular pol cont; straight type; approx 3-5/8" lg x 1-3/8" wd x 1-3/16" h o/a; 10 amp 250 v; cylindrical black bakelite body; has two mtg ears w/mtg holes	Receptacle for circuit 1 reperforator power plug	N17-C-73182-1478	CHU	6051	77348	J-1901,J-1902 J-1903,J-1943 J-1944,J-1945 J-1946	7	0	0
J-1902	Same as J-1901	Receptacle for circuit 3 reperforator power plug								

TABLE 8-4. COMBINED PARTS AND SPARE PARTS LIST

PARTS										EQUIPMENT SPARE PARTS	
SYMBOL DESIG.	NAME OF PART AND DESCRIPTION	FUNCTION	JAN OR NAVY TYPE DESIG.	SIGNAL CORPS STANDARD NAVY, AIR FORCE STOCK NO.	MANUFACTURERS CODE	MANUFACTURERS DESIG.	TELETYPE PART NO.	ALL SYMBOL DESIGNATIONS INVOLVED	TOTAL NO. PER EQUIP.	BOX	QUAN
J-1903	Same as J-1901	Receptacle for circuit 5 reperforator power plug									
J-1904	CONNECTOR, receptacle: 24 round female cont; MIL-C-5015 spec	Receptacle for CX-2649/FGC	AN3102-A-24-28P	N17-C-72645-4192	CPH	AN3102-A-24-28P	128318	J-1904,J-2014	2	0	0
J-1905	CONNECTOR, female contact: 26 rectangular contacts; straight type; approx 2-7/8" lg x 1-3/8" wd x 3/4" h o/a; rectangular body, steel, black crackle paint; molded phenolic insert; mts by four brackets; w/5/32" holes; 26 solder lug terminal	Receptacle for circuit 5 control panel		N17-C-73336-8607	CJC	S-327-AB	124774	J-1905,J-1906 J-1907,J-1936 J-1937,J-1938 J-2005,J-2006 J-2007	9	0	0
J-1906	Same as J-1905	Receptacle for circuit 1 control panel									
J-1907	Same as J-1905	Receptacle for circuit 5 control panel									
J-1908	Same as J-307	Receptacle for circuit 1 reperforator signal cord									
J-1909	Same as J-307	Receptacle for circuit 3 reperforator signal cord									
J-1910	Same as J-307	Receptacle for circuit 5 reperforator signal cord									
J-1911	JACK: for 1/4" diam two cond plug; approx 3-15/32" lg x 9/16" wd x 13/16" h o/a; J8-1D cont arrangement; mts in 15/32" diam panel hole	Rear panel circuit 6 reperforator jack		2Z5598-28 N17-J-39218-6567	CW	438C	128554	J-1911,J-1912 J-1913,J-1914 J-1915,J-1916 J-1923,J-1924 J-1925,J-1926 J-1927,J-1928	12	0	0
J-1912	Same as J-1911	Rear panel circuit 5 reperforator jack									
J-1913	Same as J-1911	Rear panel circuit 4 reperforator jack									
J-1914	Same as J-1911	Rear panel circuit 3 reperforator jack									
J-1915	Same as J-1911	Rear panel circuit 2 reperforator jack									
J-1916	Same as J-1911	Rear panel circuit 1 reperforator jack									

J-1917	JACK: for two cond 1/4" diam plug; approx 3-15/32" lg x 9/16" wd x 13/16" h o/a; cont arrangement J3; mts in 15/32" diam panel hole	Rear panel circuit 6 signal line jack	4048180 N17-J-39231-4588	CW	2180	128555	J-1917,J-1918 J-1919,J-1920 J-1921,J-1922 J-1929,J-1930 J-1931,J-1932 J-1933,J-1934	12	0
J-1918	Same as J-1917	Rear panel circuit 5 signal line jack							
J-1919	Same as J-1917	Rear panel circuit 4 signal line jack							
J-1920	Same as J-1917	Rear panel circuit 3 signal line jack							
J-1921	Same as J-1917	Rear panel circuit 2 signal line jack							
J-1922	Same as J-1917	Rear panel circuit 1 signal line jack							
J-1923	Same as J-1911	Front panel circuit 1 reperforator jack							
J-1924	Same as J-1911	Front panel circuit 2 reperforator jack							
J-1925	Same as J-1911	Front panel circuit 3 reperforator jack							
J-1926	Same as J-1911	Front panel circuit 4 reperforator jack							
J-1927	Same as J-1911	Front panel circuit 5 reperforator jack							
J-1928	Same as J-1911	Front panel circuit 6 reperforator jack							
J-1929	Same as J-1917	Front panel circuit 1 signal line jack							
J-1930	Same as J-1917	Front panel circuit 2 signal line jack							
J-1931	Same as J-1917	Front panel circuit 3 signal line jack							
J-1932	Same as J-1917	Front panel circuit 4 signal line jack							
J-1933	Same as J-1917	Front panel circuit 5 signal line jack							
J-1934	Same as J-1917	Front panel circuit 6 signal line jack							
J-1935	JACK, telephone: for three cond plug 11/64" diam; 3-23/64" lg x 13/16" wd x 9/16" h o/a; cont arrangement J10-1A; 5/32" mtg hole	Transmitter circuit jack	N17-J-39408-9976	CW	360A	128553	J-1935	1	0
J-1936	Same as J-1905	Receptacle for circuit 2 control panel							

TABLE 8-4. COMBINED PARTS AND SPARE PARTS LIST

PARTS										EQUIPMENT SPARE PARTS	
SYMBOL DESIG.	NAME OF PART AND DESCRIPTION	FUNCTION	JAN OR NAVY TYPE DESIG.	SIGNAL CORPS STANDARD NAVY, AIR FORCE STOCK NO.	MANUFACTURERS CODE	MANUFACTURERS DESIG.	TELETYPE PART NO.	ALL SYMBOL DESIGNATIONS INVOLVED	TOTAL NO. PER EQUIP.	BOX	QUAN
J-1937	Same as J-1905	Receptacle for circuit 6 control panel									
J-1938	Same as J-1905	Receptacle for circuit 4 control panel									
J-1939	Same as J-307	Receptacle for circuit 2 reperforator signal plug									
J-1940	Same as J-307	Receptacle for circuit 4 reperforator signal plug									
J-1941	Same as J-307	Receptacle for circuit 6 reperforator signal plug									
J-1942	PLUG: four flat parallel blades, male; straight type; approx 2" lg x 1" wd x 1-9/16" h o/a; rectangular body, molded bakelite; two mtg holes	Receptacle for P-502		N17-C-73480-6310	CJC	P-404-AB	105206	J-1942,J-2015	2	0	0
J-1943	Same as J-1901	Receptacle for P-501									
J-1944	Same as J-1901	Receptacle for circuit 2 reperforator power plug									
J-1945	Same as J-1901	Receptacle for circuit 4 reperforator power plug									
J-1946	Same as J-1901	Receptacle for circuit 6 reperforator power plug									
J-1947	Same as J-309	Convenience outlet and auxiliary outlet									
J-2005	Same as J-1905	Receptacle for upper message distributor-transmitter base signal plug									
J-2006	Same as J-1905	Receptacle for lower message distributor-transmitter base signal plug									
J-2007	Same as J-1905	Receptacle for number distributor-transmitter base signal plug									
J-2008	Same as J-318	Receptacle for CX-2651/FGC									

J-2009	RECEPTACLE: three rectangular pol female cont; straight type; approx 2-1/8" lg x 1-13/32" wd x 1-3/16" h o/a; 10 amp 250 v; 15 amp 125 v; cylindrical, black phenolic body; has two ears with #8-32 thd holes	Receptacle for upper message distributor-transmitter base power plug	N17-C-73173-8501 8850-514243	CHU	7214	128642	J-2009,J-2010 J-2011	4	O	O		
J-2010	Same as J-2009	Receptacle for lower message distributor-transmitter base power plug										
J-2011	Same as J-2009	Receptacle for number distributor-transmitter base power plug										
J-2013	Same as J-309	Auxiliary and convenience outlets										
J-2014	Same as J-1904	Receptacle for CX-2650/FGC										
J-2015	Same as J-1942	Receptacle for P-502										
K-101	RELAY, armature: cont arrangement 1A1B; cont rating 3 amp 120 v DC; palladium silver cont, 0.067" diam; single winding, 2000 ohms; solder lug term on coil and contacts; 3-7/8" lg x 1-1/32" wd x 1-43/64" h o/a; mts by two #8-32 thd holes 3/4" c to c; fast acting	First tape feed-out relay which energizes and de-energizes K-102	N17-R-65368-6421 3380-552180-2825	CAU	PG-16034 B13A	129398	K-101	4	O	O		
K-102	RELAY, armature: cont arrangement 1B; cont rating 3 amp 120 v DC; palladium silver cont, 0.067" diam; single winding; 2000 ohms; solder lug term on coil and contacts; 3-7/8" lg x 1-1/32" wd x 1-17/32" h o/a; mts by two #8-32 thd holes 3/4" c to c; fast acting	Second tape feed-out relay which energizes and de-energizes the clutch and control magnets	3380-563245-7795	CAU	PP-1228- 1	128616	K-102	4	O	O		
K-103	RELAY, armature: cont arrangement 2A1B1D; cont rating 3 amp 120 v DC; palladium silver cont, 0.067" diam; single winding 2500 ohms; solder lug term on coil and contacts; 3-7/8" lg x 1-1/32" wd x 2-1/32" h o/a; mts by two #8-32 thd holes 3/4" c to c; fast acting	Open line relay which controls the circuit of the open line alarm lamps	N17-R-65473-3751 3380-555170-3515	CAU	PP-1227- 1	128612	K-103,K-208	7	O	O		
K-104	RELAY, armature: cont arrangement 2A; cont rating 4 amp 120 v DC; tungsten silver cont, 3/16" diam; single winding 8000 ohms; solder lug term on coil and contacts; 1-17/32" lg x 1" wd x 1-27/64" h o/a; mts by four #4-40 thd holes on 3/8" mtg/ctrs; fast acting	Motor stop relay to control the reperforator motor when used as a spare	N17-R-64247-6841 3380-501525-6111	CAU	PP-937-2	128617	K-104	4	O	O		

TABLE 8-4. COMBINED PARTS AND SPARE PARTS LIST

PARTS									EQUIPMENT SPARE PARTS	
SYMBOL DESIG.	NAME OF PART AND DESCRIPTION	FUNCTION	JAN OR NAVY TYPE DESIG.	SIGNAL CORPS STANDARD NAVY, AIR FORCE STOCK NO.	MANUFACTURERS CODE	MANUFACTURERS DESIG.	TELETYPE PART NO.	ALL SYMBOL DESIGNATIONS INVOLVED	TOTAL NO. PER EQUIP.	BOX	QUAN
K-105	RELAY: SPDT normally open; cont rating 3 amp 150 w DC non-inductive; palladium pure contact; single winding; operating current 0.030 amps, spring biased; 5 ohms DC resistance; insulated coil; solder lug type term on contacts, wire lead type term on coil; approx 5-1/2" lg x 1-23/32" wd x 1-23/32" h o/a; mts by two screws 9/16" c to c; fast acting; dustproof cover	Line sensing relay to distribute the signals to K-103, K-101, and the re-perforator		4T72818 N17-R-64625-7271 3380-511125-2165	CW	2808A	124915	K-105,K-206	7	0	0
K-106	RELAY, armature: cont arrangement 1C; 60 mils, 120 v DC; tungsten cont; 2 concentric windings, 0.005 amp DC, 136 ohms ea winding; pin type term; approx 2-11/16" sq x 5-25/32" h o/a; mts by four corner plugs; fast acting; dustproof cover	Receiving line relay		N17-R-64646-4261 1730-486110000	CW	255A	RY30	K-106,K-201	7	0	0
K-201	Same as K-106	Transmitting line relay									
K-202	RELAY, armature: cont arrangement 3A1B; cont rating 3 amp 120 v DC; palladium silver cont, 0.067" diam; one 2000 ohm and one 4000 ohm inductive windings, one 4000 ohm non-inductive winding; solder lug term on coil and contacts; 3-7/8" lg x 1-1/32" wd x 1-15/16" h o/a; mts by two #8-32 thd holes 3/4" c to c; fast acting	Gating relay for external synchronizing pulse		N17-R-64160-2657 3380-554625-7445	CAU	PP-195-1	128614	K-202	3	0	0
K-203	RELAY, armature: cont arrangement 2A2B; cont rating 3 amp 120 v DC; palladium silver cont, 0.067" diam; single winding, 3300 ohms; solder lug term on coil and contacts; 3-7/8" lg x 1-1/32" wd x 1-11/16" h o/a; mts by two #8-32 thd holes 3/4" c to c; fast acting	Transmitter control relay to control K-209 and K-210		N17-R-64355-3720 3380-552180-5645	CAU	PP-1553-1	128615	K-203	3	0	0
K-204	RELAY, armature: cont arrangement 4A3B; cont rating 3 amp 120 v DC; palladium silver cont, 0.067" diam; single winding, 2500 ohms; solder lug term on coil and contacts; 3-7/8" lg x 1-1/32" wd x 1-31/32" h o/a; mts by two #8-32 thd holes 3/4" c to c; fast acting	Tandem relay which controls the upper distributor-transmitter clutch magnet circuit		N17-R-65034-3023 3380-555170-7115	CAU	PP-196-1	128613	K-204,K-205 K-210	9	0	0

K-205	Same as K-204	Tandem relay which controls the lower distributor-transmitter clutch magnet circuit								0	0
K-206	Same as K-105	Line sensing relay which energizes or de-energizes K-208				CAU	PP-192-3	128611	K-207, K-209	6	0
K-207	RELAY, armature: cont arrangement 4A2B; cont rating 3 amp 120 v DC; palladium silver cont, 0.067" diam; single winding, 3300 ohms; solder lug term on coil and contacts; 3-7/8" lg x 1-1/32" wd x 1-25/32" h o/a; mts by two #8-32 thd holes 3/4" c to c; fast acting	Transmitter control relay to control K-208 the channel busy lamp, and the time stamp stamping circuit			N17-R-65044-2154 3380-501525-6925						
K-208	Same as K-103	Open line relay which controls circuit of open line alarm lamps									
K-209	Same as K-207	Numbering relay which controls the number distributor-transmitter clutch magnet circuit									
K-210	Same as K-204	Numbering relay which controls the number distributor-transmitter clutch magnet circuit by the external synchronizing pulse									
K-1800	RELAY, armature: cont arrangement 2C; 8 amp, 115 v AC; phosphor bronze contacts; single winding; operating current 115 v AC; operating current 0.053 amp; non-polarized; insulated coil; solder lug type terms on coil and contacts; approx 2-7/8" lg x 1-1/8" wd x 1-3/4" h o/a; mts by one #8-32 thd hole; fast acting; non-inductive contacts	Relay for energizing and de-energizing L-1800			N17-R-64362-8046 3380-511125-5895	CGE	210-550-G2	129320	K-1800	3	0
L-501	REACTOR: filter choke; single; 0.67 hy, 670 mh; 3.31 ohms DC resistance; 1500 volts RMS test; sealed metal case; 3-3/4" lg x 3-1/2" wd x 5-1/4" h; mts by four studs 7/8" lg, #10-24 thd; two solder lug type terms on bottom	Filter choke for 115 v DC filtered output of PP-987U			36561A N16-R-28916-6917	CAIU	RF435A	129385	L-501	2	0
L-600	COIL, RF: filter, single winding; unshielded; approx 1.1 ohms DC resistance; 7/8" OD x 5/8" lg o/a; air core; one axial mtg hole 3/16" diam thru ctr; two 8 ins wire leads, one red, one white	Filter for governed motor circuit			N17-T-350013-256	CW	225-A	95936	L-600	10	1

TABLE 8-4. COMBINED PARTS AND SPARE PARTS LIST

PARTS										EQUIPMENT SPARE PARTS	
SYMBOL DESIG.	NAME OF PART AND DESCRIPTION	FUNCTION	JAN OR NAVY TYPE DESIG.	SIGNAL CORPS STANDARD NAVY, AIR FORCE STOCK NO.	MANUFACTURERS CODE	MANUFACTURERS DESIG.	TELETYPE PART NO.	ALL SYMBOL DESIGNATIONS INVOLVED	TOTAL NO. PER EQUIP.	BOX	QUAN
L-800	COIL, solenoid: copper wire, baked enamel ins; 120 v DC, for 60 mil oper, 100 ohms DC resistance, 1800 turns #35 wire; approx 1-3/32" h x 41/64" wd x 53/64" lg o/a excluding term; mts by rectangular ctr cutout; stamped "207"	Reperforator selector magnet coil		N17-T-350005-445	CTT	207M	207M	L-800	14	1	12
L-801	MAGNET: steel core, #35 enameled copper wire, #36 german silver wire; 4375 turns, 165 ohms, 500 v act; approx 1" lg x 1-3/8" wd x 1-3/8" h o/a; mts by tapped hole	Control magnet which operates 0-1174 by E-801		N17-T-350016-759 3380-172400-3615	CTT	20262WU	20262WU	L-801	4	0	0
L-802	MAGNET: c/o CTT 106155 washer, 70275 and 106153 ends, 101623 core; 210 ohms, 5000 turns #33 wire; approx 1-3/8" lg x 1" wd x 1-3/8" h o/a; mts by #6-40 thd hole in core	Clutch magnet which operates 0-1179 by E-804		4T231M N17-T-350016-323 3380-172400-3925	CTT	231M	231M	L-802	8	0	0
L-1300	MAGNET: to engage transmitter clutch in response to electrical pulse; iron core; 2840 turns, 105 DC ohms, 110 v DC; #33 CBE wire; approx 1-1/8" lg x 1-5/32" wd x 1" diam o/a; 3/8" d hole in core, #6-40 thd screw; figures "177" stamped on spool head	Clutch magnet which operates A-1308		N17-T-350013-384	CTT	177M	177M	L-1300	10	0	0
L-1302	COIL, retardation: single winding; approx 1-5/16" lg x 1/2" wd x 1-23/32" h o/a; mts by two holes in base plate; sealed metal case; two solder lug terms	Filter for transmitting contacts E-1313 and E-1315		N17-C-64204-8719	CTT	114318	114318	L-1302	9	0	0
L-1800	COIL, solenoid: 115 v AC 60 cycle, 5.4 ohms; 800 turns #21 AWG copper wire; 3" diam x 1-1/2" thk o/a; mts by 1-3/16" diam hole in ctr; four 6-1/2" lg wire leads	Operates 0-1853 and MS-1800		N17-T-350016-507	CYG	73859	129734	L-1800	3	0	0
L-1801	COIL, RF: choke; single layer mound; unshielded; 68 mh ind, 85 turns #24 wire; approx 15/16" lg x 21/32" wd x 3/8" h excluding term; plastic form, air core; mts by elongated slot two ins leads; covered w/ acetate yarn	RF filter for MX-1527/U		N17-T-350016-601	CYG	12138-S27	129322	L-1801	3	0	0

N-401	PLATE, switch designation: brass, nickel pl; cir shape w/2 ears approx 1" lg x 5/8" wd x 1/32" thk, o/a; single ctr mtg hole, keyed; marked "ON" and "OFF"	Designation plate for S-401	N17-P-405501-130	CHH	20590-1	120175	N-401,N-701	10	0	0
N-701	Same as N-401	Designation plate for S-700								
N-800	SCALE: range; irregular shape, steel, 2-3/4" x 2-1/2" x 1/2" o/a; scale on edge marked "0" to "120"; mts by "L" shaped block and body hole; stamped "HM"; link bolted on	Dial for indicating range scale setting on 60 and 75 wpm reperforators	N17-T-350009-896	CTT	90775	90775	N-800	7	0	0
N-801	SCALE: range; irregular shape, steel; 2-3/4" x 2-1/2" x 1/2" o/a; scale on edge marked "0" to "120"; mts by "L" shaped block and body hole; link bolted on	Dial for indicating range scale setting on 100 wpm reperforator	N17-T-350007-569	CTT	71696	71696	N-801	7	0	0
N-802	PLATE, indicator: steel, nickel pl; one end rounded, other end straight w/pointed tooth; approx 1-25/32" lg x 1/2" wd x 1/16" thk o/a; mts by two body holes	Indicates position of range scale mechanism and locks mechanism in place	N17-T-350007-570	CTT	71697	71697	N-802	7	0	0
N-1500	PLATE, indicator: brass; approx 7/8" lg x 1/2" wd x 0.016" thk o/a; mts by body hole ea end; letters "ON" 3/16" h; letters and border raised, background black lacquered, clear lacquer covered	Designation plate for S-1500	N17-T-350002-381	CTT	82728	82728	N-1500,N-1700	3	0	0
N-1700	Same as N-1500	Plate for S-1700								
N-2001	STRIP, designation: furnished w/metal face strip; wood, black paint; rectangular; approx 8-3/32" lg x 1-33/64" wd x 3/8" h o/a; two mtg ears	Designation strip patch frame assembly	*3	CW	Cat. 728 Code #6F	128732	N-2001	1	0	0
O-300	STIFFENER, contact spring: steel, nickel pl; irregular catch shape, flat; approx 1-7/32" lg x 15/32" wd x 0.042" thk o/a; two mtg holes	Stiffener for E-305	N17-T-350008-817	CTT	81725	81725	O-300,O-1908	1	0	0
O-301	SPRING, tape tension: c/o Teletype part/dwg 96509 roller on formed rod; loop shape w/roller; approx 4-1/16" lg x 1-1/4" wd x 1-1/32" h o/a	Supplies tension to the tape coming out of the tape container	N17-T-350010-811	CTT	97340	97340	O-301	1	0	0
O-302	SPACER: screw steel; approx 1/2" wd x 1/8" diam o/a; one untapped mtg hole 5/32" diam	Spacer between A-301 and A-303	N17-T-350012-663	CTT	79060	79060	O-302	1	0	0
O-303	LEVER: contact; steel; approx 8-1/4" lg x 15/16" wd x 2" h o/a; single tapped mtg hole #4-40 thd	Follows tape roll and actuates E-301		CTT	110354	110354	O-303	1	0	0
			*3 Shop Manufacture							

TABLE 8-4. COMBINED PARTS AND SPARE PARTS LIST

PARTS										EQUIPMENT SPARE PARTS	
SYMBOL DESIG.	NAME OF PART AND DESCRIPTION	FUNCTION	JAN OR NAVY TYPE DESIG.	SIGNAL CORPS STANDARD NAVY, AIR FORCE STOCK NO.	MANUFACTURERS CODE	MANUFACTURERS DESIG.	TELETYPE PART NO.	ALL SYMBOL DESIGNATIONS INVOLVED	TOTAL NO. PER EQUIP.	BOX	QUAN
0-304	SPRING: helical extension; 0.018" diam music wire; 1-3/32" lg x 7/32" diam o/a; 39 turns approx; hook terminals parallel; test 4 oz at 1.375"	Supplies tension for 0-303		N17-T-350014-511	CTT	4730	4730	0-304,0-807	8	0	0
0-305	CORE, tape reel, screen steel, approx 3/4" diam x 29/32" lg o/a; two #4-36 tapped holes; one #6-40 tapped hole; one untapped hole 3/16" diam; two untapped holes 1/8" diam; top stamped oil; one oil hole 1/16" diam	Core for A-305		N17-T-350002-889	CTT	89087	89087	0-305	1	0	0
0-320	MOUNTING, rubber: sq mtg; 1/16" deflection under 10 lb load; approx 1-3/4" lg x 1-3/4" wd x 5/8" h o/a; neoprene 1-1/2" diam steel sleeve w/1/4" diam hole; four mtg holes; steel plate has black lacquer finish	Mounts reperforator shelf		N17-T-350002-998	CAXP	150-PN-10	90125	0-320,0-1923	32	0	0
0-321	MOUNT, vibration: square mtg; 2-3/8" sq x 1-3/16" h overall rubber cushion mtg, formed metal plate 1-7/16" diam x 1/8" thk; steel center sleeve with 1/4" diam bolt hole; four corner mtg holes	Mounts reperforator		N17-M-75063-5376	CBAK	5155-C	114589	0-321	16	0	0
0-322	SHIM: SS, nickel pl; rectangular shape with two slots; approx 1" lg x 5/8" wd x 0.016" thk o/a; two mtg slots	Spacer for center support		4T116020 N17-T-350016-227	CTT	116020	116020	0-322	42	0	0
0-323	SPACER BAR: steel, nickel pl; rectangular shape; approx 1" lg x 3/4" wd x 0.095" thk o/a; two mtg holes	Spacer for shelf support		*1	CTT	116021	116021	0-323	8	0	0
0-324	SPRING: helical extension type; 0.082" diam music wire; approx 2-5/8" lg x 15/32" OD o/a; 22 turns; hook term at ea end	Disappearing door spring		N17-T-350016-442	CTT	116031	116031	0-324	4	0	0
0-325	SPRING: loop type; 0.018" thk steel; approx 1-5/8" lg x 11/16" wd x 7/16" h o/a; two elongated mtg holes; irregular clasp shape	Full length door detent spring		N17-T-350016-363	CTT	116083	116083	0-325,0-1925	10	0	0
0-326	SHIM: SS; rectangular shape w/2 slots; approx 2-1/4" lg x 5/8" wd x 0.016" thk o/a; two mtg slots	Shim for fuse block mounting bracket		4T117824 N17-T-350016-221	CTT	117824	117824	0-326,0-1926	84	0	0

O-327	TWISTERS, tape: loop type; steel, nickel pl; 0.125" diam; approx 7-25/32" lg x 1-17/32" wd x 5-1/8" h o/a	Guides tape to punch block	4T123514 N17-T-350016-239	CTT	123514	123514	O-327	3	O	O	
O-328	CHUTE ASSEMBLY, tape: contains chute, tape part/dwg #128396, guide, tape part/dwg #128397, bracket part/dwg #128398; approx 2-11/16" lg x 1-1/8" wd x 4-9/16" h o/a; two un-tapped mtg holes	Guides tape from punch block to time stamp	4T128399 N17-T-350016-236	CTT	128399	128399	O-328	3	O	O	
O-394	ARM: latching arm; steel, nickel pl; straight bar, one end rounded, other end straight w/broken corners; 9-5/8" lg x 1/2" wd x 1/8" thk o/a; mts by #10-32 thd hole 1/4" from rounded end	Latches sliding shelves	4T117809 N17-T-350016-656	CTT	117809	117809	O-394	6	O	O	
O-395	LINK: steel, nickel pl; formed twice near ctr, rounded ends; 1-11/16" lg x 7/16" wd x 1/8" h o/a, 0.059" thk material; two mtg holes on 1-1/4" mtg/c	Operating link between O-394 and O-396	4T117808 N17-T-350016-657	CTT	117808	117808	O-395	6	O	O	
O-396	BAR, release: steel, nickel pl; rounded end formed 900; 19-5/16" lg x 1/2" wd x 9/16" h o/a, 1/8" thk material; mts by five #10-32 thd holes	Release bars for sliding shelves	4T117807 N17-T-350016-730	CTT	117807	117807	O-396	3	O	O	
O-397	ROLLER, tray: steel, cad pl; roller riveted to mtg plate by hub; approx 2-1/8" lg x 1-1/16" diam roller x 21/32" h o/a; two csk holes on 1-3/8" mtg/c	Rollers for sliding shelves	4T117743 N17-T-350016-712	CTT	117743	117743	O-397	12	O		
O-398	ROLLER, door: steel, nickel pl; roller riveted to mtg bracket by stud; approx 2-13/16" lg x 7/16" wd x 1-1/16" h o/a; mts by two body holes in line, RH mtg; csk hole and #6-40 thd hole in bracket	Right roller for disappearing doors	4T116030 N17-T-350016-757	CTT	116030	116030	O-398	3	O	O	
O-399	ROLLER, door: steel, nickel pl; roller riveted to mtg bracket by stud; approx 2-13/16" lg x 7/16" wd x 1-1/16" h o/a; mts by two body holes in line, LH mtg; csk hole and #6-40 thd hole in bracket	Left rollers for disappearing doors	4T116028 N17-T-350016-699	CTT	116028	116028	O-399	3	O	O	

*1 Low Failure item - if required requisition from ESO referencing NavShips 900,180A

TABLE 8-4. COMBINED PARTS AND SPARE PARTS LIST

PARTS										EQUIPMENT SPARE PARTS	
SYMBOL DESIG.	NAME OF PART AND DESCRIPTION	FUNCTION	JAN OR NAVY TYPE DESIG.	SIGNAL CORPS STANDARD NAVY, AIR FORCE STOCK NO.	MANUFACTURERS CODE	MANUFACTURERS DESIG.	TELETYPE PART NO.	ALL SYMBOL DESIGNATIONS INVOLVED	TOTAL NO. PER EQUIP.	BOX	QUAN
0-401	GEAR, pinion: spur type; steel; helical teeth; RH spiral; seven teeth; pitch 22, PD 0.5882"; approx 11/16" OD x 5/16" ID x 1-9/32" lg; straight face; ctb radial hole for pin at one end	Drives 0-408		4T126909 N17-T-350016-445	CTT	126909	126909	0-401	3	0	0
0-402	ARM, tape: tape guide arm; steel; loop type irregular shape; approx 3-3/8" lg x 1-1/4" wd x 1-29/32" h o/a; #6-40 x 3/8" lg thd at one end	Guides tape to H-424 and controls movement of A-419 to stop or start clutch		4T126988 N17-T-350016-226	CTT	126988	126988	0-402	3	0	0
0-403	RELEASE, stop lever: steel, nickel pl; irregular loop shape; approx 1" lg x 1" wd x 3/4" h o/a; #6-40 x 3/8" lg thd one end	Controls 0-404		4T126916 N17-T-350016-230	CTT	126916	126916	0-403	3	0	0
0-404	LEVER, stop: 0.095" steel, nickel pl; irregular shape; approx 7-1/2" lg x 5/16" wd x 5/8" h o/a; two mtg holes	Engages or disengages with 0-412		4T126912 N17-T-350016-231	CTT	126912	126912	0-404	3	0	0
0-405	GEAR: spur type; bakelite black; helical teeth; RH; 40 teeth; 22 pitch, PD 2.1618"; approx 2-1/4" OD x 9/16" ID x 9/32" thk o/a; straight face; three ctb mtg holes	Drives 0-410		4T126908 N17-T-350016-446	CTT	126908	126908	0-405	3	0	0
0-406	SHAFT: w/gear hub pressed on; steel; round shaft and hub; approx 1-5/8" lg x 1-1/2" OD o/a; one tapped radial mtg hole at end of shaft	Shaft for 0-405 and 0-406		4T126907 N17-T-350016-235	CTT	126907	126907	0-406	3	0	0
0-407	BEARING: phosphor bronze; approx 25/32" lg x 9/16" wd x 1/4" ID o/a, 7/16"-32 x 9/32" lg threaded portion	Bearing for 0-407		4T126905 N17-T-350016-234 1730-040392514	CTT	126905	126905	0-407	3	0	0
0-408	GEAR: motor drive shaft; spur type; bakelite, natural color, linen base; straight teeth; 108 teeth; 32 pitch, 3.375" PD; approx 3-7/16" OD x 3/8" ID x 3/16" thk o/a; straight face; three mtg holes	Driven by 0-401 and drives 0-406		4T98210 N17-T-350016-220	CTT	98210	98210	0-408	3	0	0
0-409	HUB, gear: steel, nickel pl; cyl hub, flat face, extended brg shoulder, radial hole for pin; approx 1" OD x 1/4" ID x 9/16" thk; three tapped mtg holes	Secures 0-408 to 0-406		4T126910 N17-T-350016-224	CTT	126910	126910	0-409	3	0	0

0-410	GEAR: steel, nickel pl; cir disk assembly; approx 6-1/8" OD x 3/16" thk o/a; two mtg holes	Driven by 0-405 and drives 0-416	4T114501 N17-T-350016-441	CTT	114501	114501	0-410	3	0	0
0-411	DISK, friction: hard white felt; cir shape; approx 1-7/16" OD x 9/16" ID x 1/16" thk o/a	Friction coupling between 0-410 and 0-412	N17-T-350005-797 1730-044620958	CTT	76396	76396	0-411,0-413	6	1	2
0-412	CAM, stop: steel, disk shape, w/cam projection; approx 1-11/16" OD x 9/16" ID x 1/8" thk o/a	Stop cam held by 0-404 to stop 0-410	4T114499 N17-T-350016-217	CTT	114499	114499	0-412	3	0	0
0-413	Same as 0-411	Friction coupling between 0-412 and 0-414								
0-414	DISK, friction: 0.065" steel, cir shape w/right angle projection; approx 1-7/16" OD x 9/16" ID x 0.065" thk o/a; ctr mtg hole	Coupling between 0-413 and 0-415	N17-T-350008-405	CTT	76395	76395	0-414	3	0	0
0-415	SPRING, friction: flat type; CRS, 0.010" thk; approx 1-3/16" OD x 9/16" ID x 5/32" thk o/a; 12 wings; ea bent away from spring body	Spring to apply pressure in friction clutch	N17-T-350008-396 1730-043951636	CTT	76086	76086	0-415,0-1518	6	1	1
0-416	SHAFT, clutch: steel, cir cross sect w/diminishing multiple shoulders; approx 9/16" diam x 2-1/32" lg o/a; 9/16"-32 thd x 11/32" lg, 5/16"-32 thd x 3/16" lg, #6-40 thd x 5/32" lg	Shaft for friction clutch	N17-T-350010-977	CTT	98222	98222	0-416	3	0	0
0-417	BEARING, ball: single row, radial; double shield; med duty; 0.354" bore x 1.023" OD x 0.315" thk o/a; seven balls packed w/Teletype spec 10049 grease packed; std fit; ABEC-1 std tol	Bearing for friction clutch	N17-T-350006-115	CTT	6994	6994	0-417	3	0	0
0-418	GEAR: spur type; steel, nickel pl; motor drive shaft; straight teeth; 10 teeth; 32 pitch; approx 3/8" OD x 0.140" bore x 3/8" thk o/a; straight face; runs free on shaft	Driven by 0-416 and drives 0-419	4T98209 N17-T-350016-213	CTT	98209	98209	0-418	3	0	0
0-419	GEAR, tape reel drive: spur type; brass, nickel pl; straight teeth; 144 teeth; 32 pitch, 4.500" PD; approx 4-9/16" OD x 1/2" ID x 0.063" thk o/a; straight face; two mtg holes	Driven by 0-418 and drives reel assembly	4T98203 N17-T-350016-219	CTT	98203	98203	0-419	3	0	0
0-420	SHAFT: steel, nickel pl; approx 1/4" diam x 2-19/32" lg o/a; #6-40 tapped key hole at one end	Shaft for reel assembly	4T102346 N17-T-350016-440	CTT	102346	102346	0-420	3	0	0

TABLE 8-4. COMBINED PARTS AND SPARE PARTS LIST

PARTS										EQUIPMENT SPARE PARTS	
SYMBOL DESIG.	NAME OF PART AND DESCRIPTION	FUNCTION	JAN OR NAVY TYPE DESIG.	SIGNAL CORPS STANDARD NAVY, AIR FORCE STOCK NO.	MANUFACTURERS CODE	MANUFACTURERS DESIG.	TELETYPE PART NO.	ALL SYMBOL DESIGNATIONS INVOLVED	TOTAL NO. PER EQUIP.	BOX	QUAN
0-421	HUB, locating: steel, nickel pl; cir cross sect w/diminishing shanks; approx 15/16" lg x 7/8" diam o/a; 3/8"-32 x 3/16" lg thd; ctb hole for pin	Holds reel assembly to 0-420		4T102345 N17-T-350016-223	CTT	102345	102345	0-421	3	0	0
0-422	FLANGE, tape reel; black bakelite; round disk; approx 3" diam x 11/32" thk o/a; four mtg holes; one hole ctb approx 7/32" d x 1-3/4" diam	Secures 0-427 to 0-421		*1	CTT	126923	126923	0-422	3	0	0
0-423	KNOB: cir; black bakelite; for 1/4" diam shaft; press fit; approx 3" diam x 9/32" thk o/a; shaft hole 9/32" d; for mtg on 1/4" diam shaft	Secures 0-424 to 0-421		2Z824.353 N17-T-350016-275	CTT	126924	126924	0-423	3	0	0
0-424	DISK, tape reel: steel, cir disk; approx 12" OD x 0.035" thk o/a; three mtg holes; 12 lightening holes	Right reel side to hold tape roll		*1	CTT	126918	126918	0-424,0-427	6	0	0
0-425	CORE, tape reel: blk bakelite; cir shape w/pin eccentrically mtd on face; approx 1-15/16" OD x 13/32" thk OD o/a; three tapped mtg holes	Right side core for tape roll		*1	CTT	126921	126921	0-425	3	0	0
0-426	CORE ASSEMBLY, tape reel: blk bakelite; cir shape w/pin eccentrically mtd on face; approx 1-15/16" OD x 3/4" thk o/a; two tapped mtg holes	Left side core for tape roll		*1	CTT	126922	126922	0-426	3	0	0
0-427	Same as 0-424	Left reel side to hold tape roll									
0-428	SHIM: steel; approx 1/4" ID x 7/16" OD x 0.005" thk o/a; mts by ID	Spaces 0-405 and 0-407		N17-T-350009-858	CTT	90490	90490	0-428	9	1	4
0-429	SPRING: loop type; 0.031" diam music wire; approx 3/4" lg x 13/32" wide x 0.031" thk o/a; irregular hook shape	Applies pressure to hold tape roll		4T126920 N17-T-350016-218	CTT	126920	126920	0-429	24	1	8
0-430	SHIM: steel, nickel pl; cir; approx 1/2" OD x 5/16" ID x 0.028" thk o/a	Spaces 0-417 and H-468		4T76450 N17-T-350016-215 1730-043837272	CTT	76450	76450	0-430	3	0	0
0-431	SPRING: helical extension type; 0.014" diam music wire; approx 1-1/8" lg x 3/16" OD o/a; approx 52 turns; hook term indexed 90°; mts by term at ea end	Spring for A-419		N17-T-350006-397 1730-481782000	CTT	7634	7634	0-431,0-816 0-1183,0-1185	213	1	7

O-432	SPRING: helical extension; 0.014" diam music wire; approx 15/16" lg x 5/32" diam o/a; approx 44 turns; hook terminals both in same plane	Spring for O-404	N17-T-350014-719 1730-043952617	CTT	41974	41974	O-432	3	1	1
O-433	GUIDE, tape: steel, nickel pl; elongated bent rod; approx 3-1/2" lg x 2-1/2" wd x 1/8" diam; mts by formed arm	Guides tape from reperforator to reeling machine when no time stamp is used	N17-T-350016-549	CTT	129675	129675	O-433	3	0	0
O-600	LEVER: governor adj; steel, nickel pl; approx 1-7/16" lg x 11/32" wd x 1/8" thk o/a; one mtg hole; one side rounded	Operates A-603 to increase the governor motor speed	N17-T-350006-254	CTT	7661	7661	O-600	10	0	0
O-604	CUP, oil: steel; approx 3/8" h x 3/8" diam o/a; press fit; regulated by a small hole in bottom; bearing ball pressed against top opening by spring	Provides means of oiling O-609 and O-610	N17-T-350007-475	CTT	70771	70771	O-604	20	0	0
O-608	SPRING: motor type; 0.086" diam steel wire; approx 1/2" lg x 1-1/8" OD x 5/8" ID o/a; three turns; sq ends; tapered coil	Takes up end play between E-608 and A-604	N17-T-350007-593 1730-4826397OO	CG	3536317	71999	O-608	10	0	0
O-609	BEARING, ball: single row radial; single seal; light duty; 0.393" bore, 1.1811" OD, 0.500" wd; seven balls; packed w/std slush grease; loose fit; ABEC-1 std tol	Supports one end of E-608	N17-T-350008-655	CTT	80358	80358	O-609,O-610 O-700,O-707	40	1	9
O-610	Same as O-609	Supports one end of E-608								
O-611	TARGET: governor flywheel; steel, painted white w/10 equidistant blk painted divisions on circum; approx 3-5/16" OD x 2-25/32" ID x 1/4" thk o/a; mts by six equidistant slots in ID; dished out one side	Provides means for adjusting motor speed visually	N17-T-350013-446 1730-044310001	CTT	7105	7105	O-611	10	0	0
O-612	DISK, outer contact: brass; approx 1-1/8" diam x 15/16" lg o/a; mts by threaded end of shaft; head 1-1/8" diam x 3/32" thk beveled both sides, shank 27/32" lg x 3/16" diam, threaded portion 9/32" lg w/#10-32 thd	Contact between E-614 and E-609 and governor contact points	N17-T-350002-113	CTT	78443	78443	O-612	10	0	0
O-613	COVER: die cast white metal w/brass contact disk; approx 3-1/4" OD x 1/2" thk x 35/64" ID o/a; mts by three 9/64" holes equidistant on outer edge; slot on face for governor wheel clearance	Covers governor parts and provides support for O-612, O-614 and O-615	N17-T-350002-115	CTT	78451	78451	O-613	10	0	0
							*1 Low failure item - if required requisition from ESO referencing NavShips 900,180A			

TABLE 8-4. COMBINED PARTS AND SPARE PARTS LIST

PARTS									EQUIPMENT SPARE PARTS	
SYMBOL DESIG.	NAME OF PART AND DESCRIPTION	FUNCTION	JAN OR NAVY TYPE DESIG.	SIGNAL CORPS STANDARD NAVY, AIR FORCE STOCK NO.	MANUFACTURERS CODE	MANUFACTURERS DESIG.	TELETYPE PART NO.	ALL SYMBOL DESIGNATIONS INVOLVED	TOTAL NO. PER EQUIP.	BOX	QUAN
O-614	SPRING, inner contact: flat type; 0.016" nickel silver; approx 1-5/16" lg x 17/32" wd o/a; finger bent half turn at ctr; flat finger type; mts by 9/32" body hole; hook shape	Connection between governor points and brush		N17-T-350006-498	CTT	78497	78497	O-614	10	0	0
O-615	SPRING, outer contact: flat type; 1/64" nickel silver gr B; approx 1-1/4" lg x 17/32" wd x 43/64" h o/a; half turn 180°; finger type end; mts by 3/16" hole	Connection between governor points and brush		N17-T-350006-497	CTT	78496	78496	O-615	10	0	0
O-616	BEARING ASSEMBLY, sleeve: governor adjusting wheel bearing, two sections, upper CTT #72474, lower CTT #72475; brass; ea section 15/16" lg x 5/16" wd x 1/4" h o/a, two #4-36 thd mtg holes upper, two 3/32" mtg holes lower, holds 5/8" shaft	Supports O-618		N17-T-350005-961	CTT	6330	6330	O-616	10	0	0
O-617	WASHER, governor friction: nickel silver; round, 1-3/16" diam x 29/64" ID x 5/64" thk o/a less clamping ears; cupped to 5/64" two clamping ears apposed on cut off circum 7/16" wd x 9/32" lg before bending	Contacts O-618 to provide friction		N17-T-350006-293	CTT	8165	8165	O-617	10	0	0
O-618	WHEEL, governor adjusting: steel; nickel pl, w/leather between plates; approx 1-1/32" lg x 1-15/16" diam o/a; plate edges and rivet head clear lacquered	Varies tension on O-621 to change motor speed		N17-T-350005-698	CTT	6324	6324	O-618	10	1	9
O-619	BLOCK: governor contact spring holder; brass; "L" shape; approx 15/16" lg x 3/8" wd x 13/32" h o/a; two #6-32 thd mtg holes; one 9/64" and one 1/32" body holes	Supports O-622		N17-T-350001-429	CTT	6319	6319	O-619,O-620	20	0	0
O-620	Same as O-619	Supports E-621									
O-621	SPRING: helical extension type; 0.035" diam music wire; approx 1-3/16" lg x 17/64" diam o/a; 19 turns; 90° parallel hook terms	Provides tension on O-622 to vary motor speed		N17-T-350006-370	CTT	6323	6323	O-621	10	1	9
O-623	SHIM: steel; round; approx 3/8" ID x 13/16" OD x 0.010" thk; mts by ID	Locates governor on motor shaft		N17-T-350010-134 1730-043837296	CTT	91617	91617	O-623	50	1	12

O-624	HUB: governor mtg; aluminum alloy; approx 9/16" lg x 1-1/8" diam x 3/8" ID o/a; mts by ID; hub 5/16" lg x 1/2" diam w/flat spot on circum, three equidistant mtg holes w/#6-32 thd, flat spot on flange circum w/9/64" radial hole to ctr	Provides means of mounting governor on motor shaft	N17-T-350001-477	CTT	6979	73427	0-624	10	0	0
O-625	SHIM: steel, nickel pl; approx 5/16" OD x 5/32" ID x 0.014" thk o/a; mts by ID	Provides means for adjusting height of H-693	N17-T-350013-196	CTT	73427	73427	0-625,0-913 0-915	42	1	18
O-700	Same as O-609	Supports one end of E-701								
O-701	WASHER, flat: felt; round 1" OD x 3/8" ID x 1/8" thk	Retains oil for O-700	N17-T-350005-782	CTT	80309	80309	O-701	10	0	0
O-702	CUP, oil; general use; brass; approx 5/16" OD x 3/8" h o/a; mts by OD; ball point intake	Provides means of oiling O-700	N17-T-350008-703	CG	255635	80754	O-702,O-710	20	0	0
O-703	SPACER: brass; approx 7/32" OD x 9/64" ID x 7/32" lg o/a; mts by lip ea end	Provides pivot for E-704	N17-T-350002-905	CTT	89405	89405	O-703	30	0	0
O-704	SPRING: helical extension type; .012" diam music wire; approx 3-3/8" lg x 1/8" diam o/a; approx 230 turns; bent coil terminals	Holds E-704 on to S-700	N17-T-350006-556 1730-043952455	CTT	82843	82843	O-704	10	1	15
O-705	WASHER, flat: felt; round; 23/32" OD x 3/8" ID x 1/8" thk	Retains oil for O-707	N17-T-350005-805	CTT	80310	80310	O-705	10	0	0
O-706	SPRING: helical compression type; motor end play; 0.071" nickel steel; approx 31/32" diam x 29/64" lg o/a; three turns; flat ends	Takes up end play between E-701 and A-704	N17-T-350006-509	CG	3536555	80299	O-706	10	0	0
O-707	Same as O-609	Supports one end of E-701								
O-709	STATOR, motor: Teletype #124765 base mtd to stator; steel housing and core; 110 v AC, 60 cycle, 1/40 hp, 1800 rpm; approx 4-3/8" lg x 5" wd x 4-7/8" h o/a, 4-5/8" diam stator, two leads 7" lg; mts by elongated hole in ea corner of base	Operates E-701	N17-T-350009-844	CTT	90263	90263	O-709	10	0	0
O-710	Same as O-702	Provides means of oiling O-707								
O-714	WASHER, flat: steel, nickel pl; round 5/32" ID, 1/4" OD, 1/16" thk	Provides clearance between H-764 and A-708	N17-T-350005-775 1730-481614000	CTT	7001	7001	O-714,O-1124 O-1235,O-1242 O-1246,O-1250 O-1251,O-1256	168	-	6

TABLE 8-4. COMBINED PARTS AND SPARE PARTS LIST

PARTS										EQUIPMENT SPARE PARTS	
SYMBOL DESIG.	NAME OF PART AND DESCRIPTION	FUNCTION	JAN OR NAVY TYPE DESIG.	SIGNAL CORPS STANDARD NAVY, AIR FORCE STOCK NO.	MANUFACTURERS CODE	MANUFACTURERS DESIG.	TELETYPE PART NO.	ALL SYMBOL DESIGNATIONS INVOLVED	TOTAL NO. PER EQUIP.	BOX	QUAN
O-800	LEVER: shift rocker; steel, nickel pl; irregular shape, formed three places, one end straight, other end round w/csk hole, bushing welded to approx ctr; approx 1-15/32" lg x 7/16" wd x 13/16" h o/a; mts by ID of bushing	Operates O-803		N17-T-350007-567	CTT	71686	71686	O-800	7	0	0
O-801	BEARING, sleeve: steel; male and female; approx 1/4" OD x 3/16" ID x 1/4" lg o/a	Provides pivot for O-803 and O-804		N17-T-350001-659	CTT	71695	71695	O-801	7	0	0
O-802	SPRING: helical extension type; 0.008" diam music wire; 7/32" OD x 7/16" lg o/a; approx 19 turns; parallel hook term	Applies tension to O-800		N17-T-350007-674 1730-043952572	CTT	72595	72595	O-802	7	0	0
O-803	ARM: shift rocker; steel, nickel pl; "L" shape w/hollow milled shaft extension near corner; approx 1-13/32" lg x 15/16" wd x 0.120" thk o/a; mts by body hole at corner; body hole w/cutout one end, body hole near other end	Operates O-805 and O-1037		N17-T-350007-585	CTT	71970	71970	O-803	7	0	0
O-804	ARM: shift rocker; steel, nickel pl; one end rounded, hollow milled shaft extension other end; approx 1-3/8" lg x 17/32" wd x 1/8" thk o/a; mts by body hole; #6-40 thd hole near rounded end	Transfer the motion of O-800 to O-803		N17-T-350007-584	CTT	71969	71969	O-804	7	0	0
O-805	LEVER: pull bar lock-out; steel, nickel pl; irregular shape, open slot one end, cutout and two rollers riveted to other end; approx 1-9/16" lg x 7/8" wd x 7/32" thk o/a; mts by csk body hole	Blocks the "S" or bell code bar		N17-T-350006-710 1730-042355081	CTT	8448	8448	O-805	7	0	0
O-806	LEVER: steel, nickel pl; both ends rounded; approx 1-3/8" lg x 7/16" wd x 0.072" thk o/a; mts by ctr hole; body hole one end, tapped hole other end	Provides means for adjusting position of O-805		N17-T-350006-721	CTT	8462	8462	O-806	7	0	0
O-807	Same as O-304	Applies tension to O-808									
O-808	HAMMER: bell; steel, nickel pl; approx 1-11/16" lg x 15/16" wd x 13/32" thk o/a; mts by two body holes; head riveted on, one csk hole	Rings bell when O-879 is operated		N17-T-350001-552	CTT	8497	8497	O-808	7	0	0

O-810	SEGMENT, type bar: steel, nickel pl; irregular shape, curved body w/groove on ea side, 34 slots across top, six tapped holes and six ctb holes irregularly located; approx 6-1/8" lg x 1-1/2" h x 2-1/2" wd o/a; mts by three tapped holes in bottom	Provides support and guide for pull bars and type bars	N17-T-350015-689	CTT	89905	89905	0-810	7	0	0
O-811	ROD, type bar: steel, piston finish; cir shape; approx 5" lg x 1-3/16" diam material; mts by body	Provides pivot for type bars	N17-T-350001-472	CTT	6965	6965	0-811	7	0	0
O-812	BAR, pull: steel, nickel pl; irregular shape, one end rounded, other end straight; approx 6" lg x 25/32" h x 0.045" thk o/a; mts by body; one body hole, five teeth	Operates O-880	N17-T-350006-718	CTT	8458	8458	0-812	7	0	0
O-813	BAR, pull: steel, nickel pl; irregular shape, one end rounded, other end straight w/straight arm and formed arm; approx 6" lg x 1/4" wd x 1-5/32" h o/a; mts by body; one body hole, five teeth	Operates O-879 and O-808	N17-T-350004-186	CTT	102877	102877	0-813	7	0	0
O-814	BAR, pull: steel, nickel pl; irregular shape, narrow end rounded, other end twisted; approx 5-13/16" lg x 1-1/4" h x 3/8" wd o/a; mts by body; one body hole	Operates O-800 on shift signal	N17-T-350001-456	CTT	6916	6916	0-814,O-815	14	0	0
O-815	Same as O-814	Operates O-800 on space signal								
O-816	Same as O-431	Applies tension to O-813								
O-817	SPRING: helical extension type; 0.034" diam music wire; approx 5/8" lg x 3/16" OD x 5/32" ID o/a; approx 26 turns; hook term ea end indexed 90°; mts by terminals	Applies tension to O-814	N17-T-350006-401 1730-481798000	CTT	7965	7965	O-817,O-818	14	0	0
O-818	Same as O-817	Applies tension to O-815								
O-819	PALLET, type: character and symbol ◊; steel, nickel pl; gothic style type; approx 1/2" lg x 7/64" wd x 13/64" h o/a; 9/32" between type centers; mtg slot 0.050" wd straight face; stamped "71"	Prints the bell character ◊	N17-T-350004-159	CTT	102653	102653	O-819	7	0	0
O-820	PALLET, type: Same as O-819 except prints S	Prints the letter S	N17-T-350003-738	CTT	98923	98923	O-820	7	0	0
O-821	PALLET, type: Same as O-819 except prints X or /	Prints the characters X or /	N17-T-350003-756	CTT	98941	98941	O-821	7	0	0

TABLE 8-4. COMBINED PARTS AND SPARE PARTS LIST

PARTS

SYMBOL DESIG.	NAME OF PART AND DESCRIPTION	FUNCTION	JAN OR NAVY TYPE DESIG.	SIGNAL CORPS STANDARD NAVY, AIR FORCE STOCK NO.	MANUFACTURERS CODE	MANUFACTURERS DESIG.	TELETYPE PART NO.	ALL SYMBOL DESIGNATIONS INVOLVED	TOTAL NO. PER EQUIP.	EQUIPMENT SPARE PARTS BOX	EQUIPMENT SPARE PARTS QUAN
O-822	PALLET, type: Same as O-819 except prints Q or 1	Prints the characters Q or 1		N17-T-350003-732	CTT	98915	98915	O-822	7	0	0
O-823	PALLET, type: Same as O-819 except prints V or ;	Prints the characters V or ;		N17-T-350003-727	CTT	98910	98910	O-823	7	0	0
O-824	PALLET, type: Same as O-819 except prints G or &	Prints the characters G or &		N17-T-350003-736	CTT	98919	98919	O-824	7	0	0
O-825	PALLET, type: Same as O-819 except prints W or 2	Prints the characters W or 2		N17-T-350003-733	CTT	98916	98916	O-825	7	0	0
O-826	PALLET, type: Same as O-819 except prints F or !	Prints the characters F or !		N17-T-350003-741	CTT	98926	98926	O-826	7	0	0
O-827	PALLET, type: Same as O-819 except prints C or :	Prints the characters C or :		N17-T-350003-728	CTT	98911	98911	O-827	7	0	0
O-828	PALLET, type: Same as O-819 except prints D or $	Prints the characters D or $		N17-T-350003-757	CTT	98943	98943	O-828	7	0	0
O-829	PALLET, type: Same as O-819 except prints R or 4	Prints the characters R or 4		N17-T-350003-743	CTT	98928	98928	O-829	7	0	0
O-830	PALLET, type: Same as O-819 except prints J or ,	Prints the characters J or ,		N17-T-350003-725	CTT	98908	98908	O-830	7	0	0
O-831	PALLET, type: Same as O-819 except prints A or -	Prints the characters A or -		N17-T-350003-729	CTT	98912	98912	O-831	7	0	0
O-832	PALLET, type: Same as O-819 except prints T or 5	Prints the characters T or 5		N17-T-350003-746	CTT	98931	98931	O-832	7	0	0
O-833	PALLET, type: Same as O-819 except prints E or 3	Prints the characters E or 3		N17-T-350003-745	CTT	98930	98930	O-833	7	0	0
O-834	PALLET, type: Same as O-819 except prints N or ,	Prints the characters N or ,		N17-T-350003-726	CTT	98909	98909	O-834	7	0	0
O-835	PALLET, type: Same as O-819 except prints I or 8	Prints the characters I or 8		N17-T-350003-734	CTT	98917	98917	O-835	7	0	0
O-836	PALLET, type: Same as O-819 except prints O or 9	Prints the characters O or 9		N17-T-350003-748	CTT	98933	98933	O-836	7	0	0
O-837	PALLET, type: Same as O-819 except prints H or £	Prints the characters H or £		N17-T-350003-737	CTT	98920	98920	O-837	7	0	0
O-838	PALLET, type: Same as O-819 except prints L or)	Prints the characters L or)		N17-T-350003-759	CTT	98945	98945	O-838	7	0	0
O-839	PALLET, type: Same as O-819 except prints U or 7	Prints the characters U or 7		N17-T-350003-747	CTT	98932	98932	O-839	7	0	0
O-840	PALLET, type: Same as O-819 except prints M or	Prints the characters M or		N17-T-350003-722	CTT	98904	98904	O-840	7	0	0

O-841	PALLET, type: Same as O-819 except prints Y or 6	Prints the characters Y or 6	N17-T-350003-744	CTT	98929	98929	O-841	7	O	O		
O-842	PALLET, type: Same as O-819 except prints P or Ø	Prints the characters P or Ø	N17-T-350004-319	CTT	104845	104845	O-842	7	O	O		
O-843	PALLET, type: Same as O-819 except prints B or ?	Prints the characters B or ?	N17-T-350003-742	CTT	98927	98927	O-843	7	O	O		
O-844	PALLET, type: Same as O-819 except prints K or (	Prints the characters K or (		CTT	98944	98944	O-844	7	O	O		
O-845	PALLET, type: Same as O-819 except prints Z or "	Prints the characters Z or "	N17-T-350003-721	CTT	98903	98903	O-845	7	O	O		
O-846	PALLET, type: Same as O-819 except prints < or <	Prints the characters < or <	N17-T-350003-970	CTT	101582	101582	O-846	7	O	O		
O-847	PALLET, type: Same as O-819 except prints = or =	Prints the characters = or =	N17-T-350003-971	CTT	101583	101583	O-847	7	O	O		
O-848	PALLET, type: Same as O-819 except prints \ or \	Prints the characters \ or \	N17-T-350003-969	CTT	101579	101579	O-848	7	O	O		
O-849	BAR, type: steel, nickel pl one end; approx 3-1/4" lg x 3/4" wd x 9/16" h o/a; mts by slot in body; stamped "0"; one end bent 54 deg six teeth mtg end	Supports O-819	N17-T-350004-876	CTT	78175	78175	O-849	7	O	O		
O-850	BAR, type: Same as O-849 except stamped "1" and bent 50 deg	Supports O-820	N17-T-350006-198	CTT	7421	7421	O-850	7	O	O		
O-851	BAR, type: Same as O-849 except stamped "2" and bent 45 deg	Supports O-821	N17-T-350006-199	CTT	7422	7422	O-851	7	O	O		
O-852	BAR, type: Same as O-849 except stamped "3" and bent 41 deg	Supports O-822	N17-T-350006-200	CTT	7423	7423	O-852	7	O	O		
O-853	BAR, type: Same as O-849 except stamped "4" and bent 37 deg	Supports O-823	N17-T-350006-201	CTT	7424	7424	O-853	7	O	O		
O-854	BAR, type: Same as O-849 except stamped "5" and bent 33 deg	Supports O-824	N17-T-350006-202	CTT	7425	7425	O-854	7	O	O		
O-855	BAR, type: Same as O-849 except stamped "6" and bent 29 deg	Supports O-825	N17-T-350006-203	CTT	7426	7426	O-855	7	O	O		
O-856	BAR, type: Same as O-849 except stamped "7" and bent 26 deg	Supports O-826	N17-T-350006-204	CTT	7427	7427	O-856	7	O	O		
O-857	BAR, type: Same as O-849 except stamped "8" and bent 22 deg	Supports O-827	N17-T-350006-205	CTT	7428	7428	O-857	7	O	O		
O-858	BAR, type: Same as O-849 except stamped "9" and bent at 18 deg	Supports O-828	N17-T-350006-206	CTT	7429	7429	O-858	7	O	O		

TABLE 8-4. COMBINED PARTS AND SPARE PARTS LIST

PARTS									EQUIPMENT SPARE PARTS	
SYMBOL DESIG.	NAME OF PART AND DESCRIPTION	FUNCTION	JAN OR NAVY TYPE DESIG.	SIGNAL CORPS STANDARD NAVY, AIR FORCE STOCK NO.	MANUFACTURERS CODE	MANUFACTURERS DESIG.	TELETYPE PART NO.	ALL SYMBOL DESIGNATIONS INVOLVED	TOTAL NO. PER EQUIP.	BOX	QUAN
0-859	BAR, type: Same as 0-849 except stamped "10" and bent 15 deg	Supports 0-829		N17-T-350006-207	CTT	7430	7430	0-859	7	0	0
0-860	BAR, type: Same as 0-849 except stamped "11" and bent 12 deg	Supports 0-830		N17-T-350006-208	CTT	7431	7431	0-860	7	0	0
0-861	BAR, type: Same as 0-849 except stamped "12" and bent eight deg	Supports 0-831		N17-T-350006-209	CTT	7432	7432	0-861	7	0	0
0-862	BAR, type: Same as 0-849 except stamped "13" and bent five deg	Supports 0-832		N17-T-350006-210	CTT	7433	7433	0-862	7	0	0
0-863	BAR, type: Same as 0-849 except stamped "14" and bent two deg	Supports 0-833		N17-T-350006-211	CTT	7434	7434	0-863	7	0	0
0-864	BAR, type: Same as 0-849 except stamped "15" and bent two deg	Supports 0-834		N17-T-350006-212	CTT	7435	7435	0-864	7	0	0
0-865	BAR, type: Same as 0-849 except stamped "16" and bent five deg	Supports 0-835		N17-T-350006-213	CTT	7436	7436	0-865	7	0	0
0-866	BAR, type: Same as 0-849 except stamped "17" and bent eight deg	Supports 0-836		N17-T-350006-214	CTT	7437	7437	0-866	7	0	0
0-867	BAR, type: Same as 0-849 except stamped "18" and bent at 12 deg	Supports 0-837		N17-T-350006-215	CTT	7438	7438	0-867	7	0	0
0-868	BAR, type: Same as 0-849 except stamped "19" and bent 15 deg	Supports 0-838		N17-T-350006-216	CTT	7439	7439	0-868	7	0	0
0-869	BAR, type: Same as 0-849 except stamped "20" and bent 18 deg	Supports 0-839		N17-T-350006-217	CTT	7440	7440	0-869	7	0	0
0-870	BAR, type: Same as 0-849 except stamped "21" and bent 22 deg	Supports 0-840		N17-T-350006-218	CTT	7441	7441	0-870	7	0	0
0-871	BAR, type: Same as 0-849 except stamped "22" and bent 26 deg	Supports 0-841		N17-T-350006-219	CTT	7442	7442	0-871	7	0	0
0-872	BAR, type: Same as 0-849 except stamped "23" and bent 29 deg	Supports 0-842		N17-T-350006-220	CTT	7443	7443	0-872	7	0	0
0-873	BAR, type: Same as 0-849 except stamped "24" and bent 33 deg	Supports 0-843		N17-T-350006-221	CTT	7444	7444	0-873	7	0	0

O-874	BAR, type: Same as O-849 except stamped "25" and bent 37 deg	Supports O-844	N17-T-350006-222	CTT	7445	7445	O-874	7	O	O
O-875	BAR, type: Same as O-849 except stamped "26" and bent 41 deg	Supports O-845	N17-T-350006-223	CTT	7446	7446	O-875	7	O	O
O-876	BAR, type: Same as O-849 except stamped "27" and bent 45 deg	Supports O-846	N17-T-350006-224	CTT	7447	7447	O-876	7	O	O
O-877	BAR, type: Same as O-849 except stamped "28" and bent 50 deg	Supports O-847	N17-T-350006-225	CTT	7448	7448	O-877	7	O	O
O-878	BAR, type: Same as O-849 except stamped "29" and bent 54 deg	Supports O-848	N17-T-350006-279	CTT	7885	7885	O-878	7	O	O
O-879	BAR, type: c/o CTT #78175 type bar w/#102653 type pallet; steel, nickel pl; approx 3-7/16" lg x 23/32" h x 7/64" wd o/a; mts by slot in geared end; "3" stamped on type bar in 1/16" figures; character and symbol Δ on type pallet	Prints the character bell located in position No 3 of the type bar segment	N17-T-350003-837	CTT	99036	99036	O-879	7	O	O
O-880	BAR, type: c/o CTT #7421 type bar w/#98923 type pallet; steel, nickel pl; approx 3-7/16" lg x 23/32" h x 7/64" wd o/a; mts by slot in geared end; "1" stamped on type bar in 1/16" figures; character and symbol S on type pallet	Prints the character S located in position No 4 of the type bar segment	N17-T-350003-832	CTT	99028	99028	O-880	7	O	O
O-881	BAR, type: c/o CTT #7422 type bar w/#98941 type pallet; steel, nickel pl; approx 3-7/16" lg x 23/32" h x 7/64" wd o/a; mts by slot in geared end; "2" stamped on type bar in 1/16" figures; character and symbol X, / on type pallet	Prints the character X or / located in position No 5 of the type bar segment	N17-T-350003-776	CTT	98968	98968	O-881	7	O	O
O-882	BAR, type: c/o CTT #7423 type bar w/#98915 type pallet; steel, nickel pl; approx 3-7/16" lg x 23/32" h x 7/64" wd o/a; mts by slot in geared end; "3" stamped on type bar in 1/16" figures; character and symbol Q, 1 on type pallet	Prints the character Q or 1 located in position No 6 of the type bar segment	N17-T-350003-777	CTT	98969	98969	O-882	7	O	O
O-883	BAR, type: c/o CTT #7424 type bar w/#99910 type pallet; steel, nickel pl; approx 3-7/16" lg x 23/32" h x 7/64" wd o/a; mts by slot in geared end; "4" stamped on type bar in 1/16" figures; character and symbol V, ; on type pallet	Prints the character V or ; located in position No 6 of the type bar segment	N17-T-350003-779	CTT	98971	98971	O-883	7	O	O

TABLE 8-4. COMBINED PARTS AND SPARE PARTS LIST

PARTS

SYMBOL DESIG.	NAME OF PART AND DESCRIPTION	FUNCTION	JAN OR NAVY TYPE DESIG.	SIGNAL CORPS STANDARD NAVY, AIR FORCE STOCK NO.	MANUFACTURERS		TELETYPE PART NO.	ALL SYMBOL DESIGNATIONS INVOLVED	TOTAL NO. PER EQUIP.	EQUIPMENT SPARE PARTS	
					CODE	DESIG.				BOX	QUAN
O-884	BAR, type: c/o CTT #7425 type bar w/#98919 type pallet; steel; nickel pl; approx 3-7/16" lg x 23/32" h x 7/64" wd o/a; mts by slot in geared end; "5" stamped on type bar in 1/16" figures; character and symbol G, & on type pallet	Prints the character G or & located in position No 8 of the type bar segment		N17-T-350013-408	CTT	98974	98974	O-884	7	0	0
O-885	BAR, type: c/o CTT #7426 type bar w/#98916 type pallet; steel, nickel pl; approx 3-7/16" lg x 23/32" h x 7/64" wd o/a; mts by slot in geared end; "6" stamped on type bar in 1/16" figures; character and symbol W, 2 on type pallet	Prints the character W or 2 located in position No 9 of the type bar segment		N17-T-350003-782	CTT	98975	98975	O-885	7	0	0
O-886	BAR, type: c/o CTT #7427 type bar w/#98926 type pallet; steel, nickel pl; approx 3-7/16" lg x 23/32" h x 7/64" wd o/a; mts by slot in geared end; "7" stamped on type bar in 1/16" figures; character and symbol F, ! on type pallet	Prints the character F or ! located in position No 10 of the type bar segment		N17-T-350003-784	CTT	98977	98977	O-886	7	0	0
O-887	BAR, type: c/o CTT #7428 type bar w/#98911 type pallet; steel, nickel pl; approx 3-7/16" lg x 23/32" h x 7/64" wd o/a; mts by slot in geared end; "8" stamped on type bar in 1/16" figures; character and symbol C, : on type pallet	Prints the character C or : located in position No 11 of the type bar segment		N17-T-350003-788	CTT	98981	98981	O-887	7	0	0
O-888	BAR, type: c/o CTT #7429 type bar w/#98943 type pallet; steel, nickel pl; approx 3-7/16" lg x 23/32" h x 7/64" wd o/a; mts by slot in geared end; "9" stamped on type bar in 1/16" figures; character and symbol D, $ on type pallet	Prints the character D or $ located in position No 12 of the type bar segment		N17-T-350003-791	CTT	98984	98984	O-888	7	0	0
O-889	BAR, type: c/o CTT #7430 type bar w/#98928 type pallet; steel, nickel pl; approx 3-7/16" lg x 23/32" h x 7/64" wd o/a; mts by slot in geared end; "10" stamped on type bar in 1/16" figures; character and symbol R, 4 on type pallet	Prints the character R or 4 located in position No 13 of the type bar segment		N17-T-350003-792	CTT	98985	98985	O-889	7	0	0

O-890	BAR, type: c/o CTT #7431 type bar w/#98908 type pallet; steel, nickel pl; approx 3-7/16" lg x 23/32" h x 7/64" wd o/a; mts by slot in geared end; "11" stamped on type bar in 1/16" figures; character and symbol J, , on type pallet	Prints the character J or , located in position No 14 of the type bar segment	N17-T-350003-795	CTT	98988	98988	O-890	7	O	O
O-891	BAR, type: c/o CTT #7432 type bar w/#98912 type pallet; steel, nickel pl; approx 3-7/16" lg x 23/32" h x 7/64" wd o/a; mts by slot in geared end; "12" stamped on type bar in 1/16" figures; character and symbol A, - on type pallet	Prints the character A or - located in position No 15 of the type bar segment	N17-T-350003-797	CTT	98991	98991	O-891	7	O	O
O-892	BAR, type: c/o CTT #7433 type bar w/#98931 type pallet; steel, nickel pl; approx 3-7/16" lg x 23/32" h x 7/64" wd o/a; mts by slot in geared end; "13" stamped on type bar in 1/16" figures; character and symbol T, 5 on type pallet	Prints the character T or 5 located in position No 16 of the type bar segment	N17-T-350003-798	CTT	98992	98992	O-892	7	O	O
O-893	BAR, type: c/o CTT #7434 type bar w/#98930 type pallet; steel, nickel pl; approx 3-7/16" lg x 23/32" h x 7/64" wd o/a; mts by slot in geared end; "14" stamped on type bar in 1/16" figures; character and symbol E, 3 on type pallet	Prints the character E or 3 located in position No 17 of the type bar segment	N17-T-350003-799	CTT	98993	98993	O-893	7	O	O
O-894	BAR, type: c/o CTT #7435 type bar w/#98909 type pallet; steel, nickel pl; approx 3-7/16" lg x 23/32" h x 7/64" wd o/a; mts by slot in geared end; "15" stamped on type bar in 1/16" figures; character and symbol N, , on type pallet	Prints the character N or , located in position No 18 of the type bar segment	N17-T-350003-801	CTT	98995	98995	O-894	7	O	O
O-895	BAR, type: c/o CTT #7436 type bar w/#98917 type pallet; steel, nickel pl; approx 3-7/16" lg x 23/32" h x 7/64" wd o/a; mts by slot in geared end; "16" stamped on type bar in 1/16" figures; character and symbol I, 8 on type pallet	Prints the character I or 8 located in position No 19 of the type bar segment	N17-T-350003-804	CTT	98998	98998	O-895	7	O	O
O-896	BAR, type: c/o CTT #7437 type bar w/#98933 type pallet; steel, nickel pl; approx 3-7/16" lg x 23/32" h x 7/64" wd o/a; mts by slot in geared end; "17" stamped on type bar in 1/16" figures; character and symbol O, 9 on type pallet	Prints the character O or 9 located in position No 20 of the type bar segment	N17-T-350003-805	CTT	98999	98999	O-896	7	O	O

TABLE 8-4. COMBINED PARTS AND SPARE PARTS LIST

PARTS									EQUIPMENT SPARE PARTS	
SYMBOL DESIG.	NAME OF PART AND DESCRIPTION	FUNCTION	JAN OR NAVY TYPE DESIG.	SIGNAL CORPS STANDARD NAVY, AIR FORCE STOCK NO.	MANUFACTURERS CODE	MANUFACTURERS DESIG.	TELETYPE PART NO.	ALL SYMBOL DESIGNATIONS INVOLVED	TOTAL NO. PER EQUIP.	BOX	QUAN
O-897	BAR, type: c/o CTT #7438 type bar w/#98920 type pallet; steel, nickel pl; approx 3-7/16" lg x 23/32" h x 7/64" wd o/a; mts by slot in geared end; "18" stamped on type bar in 1/16" figures; character and symbol H, £ on type pallet	Prints the character H or £ located in position No 21 of the type bar segment		N17-T-350003-807	CTT	99001	99001	O-897	7	0	0
O-898	BAR, type: c/o CTT #7439 type bar w/#98945 type pallet; steel, nickel pl; approx 3-7/16" lg x 23/32" h x 7/64" wd o/a; mts by slot in geared end; "19" stamped on type bar in 1/16" figures; character and symbol L,) on type pallet	Prints the character L or) located in position No 22 of the type bar segment		N17-T-350003-810	CTT	99004	99004	O-898	7	0	0
O-899	BAR, type: c/o CTT #7440 type bar w/#98932 type pallet; steel, nickel pl; approx 3-7/16" lg x 23/32" h x 7/64" wd o/a; mts by slot in geared end; "20" stamped on type bar in 1/16" figures; character and symbol U, 7 on type pallet	Prints the character U or 7 located in position No 23 of the type bar segment		N17-T-350003-812	CTT	99006	99006	O-899	7	0	0
O-900	BAR, type: c/o CTT #7441 type bar w/#98904 type pallet; steel, nickel pl; approx 3-7/16" lg x 23/32" h x 7/64" wd o/a; mts by slot in geared end; "21" stamped on type bar in 1/16" figures; character and symbol M, . on type pallet	Prints the character M or . located in position No 24 of the type bar segment		N17-T-350003-813	CTT	99007	99007	O-900	7	0	0
O-901	BAR, type c/o CTT #7442 type bar w/#98929 type pallet; steel, nickel pl; approx 3-7/16" lg x 23/32" h x 7/64" wd o/a; mts by slot in geared end; "22" stamped on type bar in 1/16" figures; character and symbol Y, 6 on type pallet	Prints the character Y or 6 located in position No 25 of the type bar segment		N17-T-350003-816	CTT	99010	99010	O-901	7	0	0
O-902	BAR, type: c/o CTT #7443 type bar w/#104845 type pallet; steel, nickel pl; approx 3-7/16" lg x 23/32" h x 7/64" wd o/a; mts by slot in geared end; "23" stamped on type bar in 1/16" figures; character and symbol P, Ø on type pallet	Prints the character P or Ø located in position No 26 of the type bar segment		N17-T-350004-325	CTT	104951	104951	O-902	7	0	0

O-903	BAR, type: c/o CTT #7444 type bar w/#98927 type pallet; steel, nickel pl; approx 3-7/16" lg x 23/32" h x 7/64" wd o/a; mts by slot in geared end; "24" stamped on type bar in 1/16" figures; character and symbol B, ? on type pallet	Prints the character B or ? located in position No 27 of the type bar segment	N17-T-350003-819	CTT	99013	99013	O-903	7	O	O	
O-904	BAR, type: c/o CTT #7445 type bar w/#98944 type pallet; steel, nickel pl; approx 3-7/16" lg x 23/32" h x 7/64" wd o/a; mts by slot in geared end; "25" stamped on type bar in 1/16" figures; character and symbol K, (on type pallet	Prints the character K or (located in position No 28 of the type bar segment	N17-T-350003-822	CTT	99016	99016	O-904	7	O	O	
O-905	BAR, type: c/o CTT #7446 type bar w/#98903 type pallet; steel, nickel pl; approx 3-7/16" lg x 23/32" h x 7/64" wd o/a; mts by slot in geared end; "26" stamped on type bar in 1/16" figures; character and symbol Z, " on type pallet	Prints the character Z or " located in position No 29 of the type bar segment	N17-T-350003-825	CTT	99019	99019	O-905	7	O	O	
O-906	BAR, type: c/o CTT #7447 type bar w/#101582 type pallet; steel, nickel pl; approx 3-7/16" lg x 23/32" h x 7/64" wd o/a; mts by slot in geared end; "27" stamped on type bar in 1/16" figures; character and symbol < , < on type pallet	Prints the character < or < located in position No 30 of the type bar segment	N17-T-350003-834	CTT	99032	99032	O-906	7	O	O	
O-907	BAR, type: c/o CTT #7448 type bar w/#101583 type pallet; steel, nickel pl; approx 3-7/16" lg x 23/32" h x 7/64" wd o/a; mts by slot in geared end; "28" stamped on type bar in 1/16" figures; character and symbol ≡ , ≡ on type pallet	Prints the character ≡ or ≡ located in position No 31 of the type bar segment	N17-T-350003-835	CTT	99033	99033	O-907	7	O	O	
O-908	BAR, type: c/o CTT #7885 type bar w/#101579 type pallet; steel, nickel pl; approx 3-7/16" lg x 23/32" h x 7/64" wd o/a; mts by slot in geared end; "29" stamped on type bar in 1/16" figures; character and symbol \\ , \\ on type pallet	Prints the character \\ or \\ located in position No 32 of the type bar segment	N17-T-350003-836	CTT	99034	99034	O-908	7	O	O	
O-909	BAR, pull: steel, nickel pl; irregular shape, narrow end rounded, other end formed; approx 3-13/16" lg x 1-7/32" h x 1/4" wd o/a; mts by body; one body hole	Operates O-1045	N17-T-350001-457	CTT	6917	6917	O-909	7	O	O	

TABLE 8-4. COMBINED PARTS AND SPARE PARTS LIST

PARTS										EQUIPMENT SPARE PARTS	
SYMBOL DESIG.	NAME OF PART AND DESCRIPTION	FUNCTION	JAN OR NAVY TYPE DESIG.	SIGNAL CORPS STANDARD NAVY, AIR FORCE STOCK NO.	MANUFACTURERS CODE	MANUFACTURERS DESIG.	TELETYPE PART NO.	ALL SYMBOL DESIGNATIONS INVOLVED	TOTAL NO. PER EQUIP.	BOX	QUAN
0-910	LEVER: code bar locking; steel, nickel pl; irregular shape, both ends ground to 0.046" thk, narrow end rounded, other end straight w/rectangular cutout; approx 4-3/16" lg x 25/32" h x 1/8" thk o/a; mts by body; one body hole	Locks code bars 0-918, 0-919, 0-920, 0-921 and 0-922, in marking or spacing position		N17-T-350011-578	CTT	103310	103310	0-910	7	0	0
0-911	SPRING: helical extension type; 0.018" diam music wire; 7/32" OD x 1-1/4" lg o/a; approx 50 turns; hookterminals, indexed 90 deg	Applies tension to 0-909		N17-T-350006-400	CTT	7825	7825	0-911	7	1	3
0-912	SPRING: helical compression type; to keep tension on operating lever; 1/32" music wire; approx 1" lg x 15/64" diam; 26 turns; parallel hook terminals	Applies tension to 0-910		N17-T-350005-200	CTT	3610	3610	0-912,0-1309	10	1	9
0-913	Same as 0-625	Holds left end of 0-914 away from 0-916									
0-914	GUARD, pull bar: steel, nickel pl; "C" shape; approx 5-13/16" lg x 2-1/16" h x 7/16" wd o/a; mts by two slotted ends	Protects 0-916		N17-T-350003-654	CTT	98479	98479	0-914	7	0	0
0-915	Same as 0-625	Holds right end of 0-914 away from 0-916									
0-916	STOP, type bar: steel, nickel pl w/bonded sirvene strip; "C" shape; approx 5-5/8" lg x 2-1/16" h x 7/16" wd o/a; mts by body hole at ea end	Provides a stop for the type bars		4T124535 N17-T-350016-299	CTT	124535	124535	0-916	7	1	12
0-917	ROLLER, guide: steel; approx 3/64" lg x 7/32" OD x 9/64" ID o/a; mts by ID	Provides pivot for 0-918		N17-T-350001-448 1730-481568000	CTT	6859	6859	0-917,0-1098 0-1202,0-1204 0-1206,0-1208 0-1227,0-1228 0-1229,0-1230	105	0	0
0-918	BAR, code: steel, nickel pl; semi cir shape w/2 mtg ears and notch on outer edge, 27 teeth on inner edge; approx 6-3/4" lg x 2-1/4" h x 0.043" thk o/a; mts by elongated hole in ea ear; stamped "1J"	Responds to the first impulse received and blocks or permits pull bar to be selected. No 1 code bar		N17-T-350003-454	CTT	95461	95461	0-918	7	0	0

O-919	BAR, code: steel, nickel pl; semi cir shape w/2 mtg ears and notch on outer edge, 26 teeth on inner edge; approx 6-3/4" lg x 2-1/4" h x 0.043" thk o/a; mts by elongated hole in ea ear; stamped "2"	Responds to the second impulse received and blocks or permits pull bar to be selected. No 2 code bar	N17-T-350003-455	CTT	95462	95462	0-919	7	0	0
O-920	BAR, code: steel, nickel pl; semi cir shape w/2 mtg ears and notch on outer edge, 31 teeth on inner edge; approx 6-3/4" lg x 2-1/4" h x 0.043" thk o/a; mts by elongated hole in ea ear; stamped "3"	Responds to the third impulse received and blocks or permits pull bar to be selected. No 3 code bar	N17-T-350003-456	CTT	95463	95463	0-920	7	0	0
O-921	BAR, code: steel, nickel pl; semi cir shape w/2 mtg ears and notch on outer edge; 26 teeth on inner edge; approx 6-3/4" lg x 2-1/4" h x 0.043" thk o/a; mts by elongated hole in ea ear; stamped "4"	Responds to the fourth impulse received and blocks or permits pull bar to be selected. No 4 code bar	N17-T-350003-457	CTT	95464	95464	0-921	7	0	0
O-922	BAR, code: steel, nickel pl; semi cir shape w/2 mtg ears and notch on outer edge, 29 teeth on inner edge; approx 6-3/4" lg x 2-1/4" h x 0.043" thk o/a; mts by elongated hole in ea ear; stamped "5"	Responds to the fifth impulse received and blocks or permits pull bar to selected. No 5 code bar	N17-T-350003-458	CTT	95465	95465	0-922	7	0	0
O-923	GUIDE, pull bar: steel, nickel pl; irregular shape, 34 slots inside of curve, three body holes and two tapped holes in upper p/o body; approx 6-15/16" lg x 3-3/8" h x 0.095" thk o/a; mts by two elongated holes at top	Supports code bars and guides pull bars	N17-T-350008-323	CTT	75517	75517	0-923	7	0	0
O-924	ROLLER, bail: steel; approx 3/16" lg x 7/16" OD; mts by 1/4" ID	Provides a guide for left end of O-927 or O-1254	N17-T-350007-860	CTT	74008	74008	0-924,O-930	14	0	0
O-925	BEARING, sleeve: steel; approx 1/4" OD x 3/16" ID x 3/16" lg o/a	Provides a pivot for O-924	N17-T-350001-691	CTT	74006	74006	0-925,O-929	14	0	0
O-926	BAIL: steel, nickel pl; semi cir shape; approx 6-1/8" lg x 1-3/4" wd x 1/16" thk o/a; two mtg holes; dovetailed inner circum	Disengages pull bars from type bars	4T112573 N17-T-350016-420	CTT	112573	112573	0-926	7	0	0
O-927	BAIL: steel, nickel pl; semi cir shape; approx 6-3/4" lg x 3-9/16" wd x 7/32" h o/a; two integral thd mtg studs; two thd body holes, three reamed body holes, dovetailed portion on inner circum of one dowel pin	Operates selected pull bar and O-931	4T112574 N17-T-350016-370	CTT	112574	112574	0-927	7	0	0

TABLE 8-4. COMBINED PARTS AND SPARE PARTS LIST

PARTS										EQUIPMENT SPARE PARTS	
SYMBOL DESIG.	NAME OF PART AND DESCRIPTION	FUNCTION	JAN OR NAVY TYPE DESIG.	SIGNAL CORPS STANDARD NAVY, AIR FORCE STOCK NO.	MANUFACTURERS CODE	MANUFACTURERS DESIG.	TELETYPE PART NO.	ALL SYMBOL DESIGNATIONS INVOLVED	TOTAL NO. PER EQUIP.	BOX	QUAN
O-928	SHIM: nickel silver; round, 3/16" ID, 7/16" OD 0.010" thk	Provides adjustment for height of O-923		N17-T-350005-785 1730-043837264	CTT	71047	71047	O-928,O-1223 O-1225,O-1500 O-1700	274	1	81
O-929	Same as O-925	Provides pivot for O-930									
O-930	Same as O-924	Provides a guide for right end of O-927 or O-1254									
O-931	BAIL: ribbon reverse; steel, nickel pl; approx 3-1/16" lg x 5/16" wd x 1/2" d o/a; two mtg holes; formed 3 places, chisel point both ends	Operates O-972 or O-985		N17-T-350016-486	CTT	6834	6834	O-931	7	0	0
O-932	CUP, oil: steel, nickel pl; approx 5/8" lg x 11/32" OD o/a; shank threaded 5/32" lg #1/4"-32; screw cap	Provides means of oiling O-935		N17-T-350002-103	CTT	78244	78244	O-932	7	0	0
O-933	BUSHING: steel, nickel pl; male and female; 17/32" lg x 1/2" across flats o/a; one end tapped #1/4"-32 thd, 1/4" d, opposite end ctb 9/32" d x 17/64" ID; shank 7/16" lg, threaded 9/32" lg w/3/8"-32 thd	Secures O-927 to O-935		N17-T-350001-484	CTT	7018	7018	O-933	7	0	0
O-934	WICK, oiler: white felt; approx 1-3/8" lg x 1" wd x 1/8" thk; slit, w/1/2" groove	Retains oil for O-935		N17-T-350003-601	CTT	98150	98150	O-934	7	0	0
O-935	PLUNGER: main bail; steel; approx 4-1/4" lg x 1/2" diam o/a; mts by OD and axial tapped hole; irregularly cut-out and one radial hole near center, axial hole opposite mtg end	Operates O-927, O-931 and O-956		N17-T-350006-728 1730-043189518	CTT	8474	8474	O-935	7	0	0
O-936	BEARING, sleeve: bearing for plunger; bronze; 5/8" OD x 1/2" ID x 3-7/16" lg o/a; has one slot and two semi cir cutouts in body	Supports and guides O-935		N17-T-350006-108	CTT	6952	6952	O-936	7	0	0
O-937	WICK: lubricating wick; hard white felt; without springs; 5/8" lg x 1/8" diam o/a	Retains oil for O-935		N17-T-350001-968 1730-483652000	CTT	75226	75226	O-937	7	0	0
O-938	GUIDE, bail: steel, nickel pl; irregular shape, beveled edge on mtg side, elongated cutout rounded at end; approx 1-17/32" lg x 1-5/32" wd x 1/8" thk o/a; mts by two body holes	Provides a guide for O-924		N17-T-350008-111	CTT	74286	74286	O-938,O-941	14	0	0

O-939	PAWL: spring steel; rectangular shape, one end formed 30° approx 1" lg x 3/8" wd x 1/8" h o/a; mts by elongated hole opposite formed end	Prevents O-950 from turning backward	N17-T-350001-549	CTT	8493	8493	O-939,O-954	14	0	0
O-940	SPRING: helical extension type; 0.028" diam music wire; approx 5/8" lg x 3/16" OD x 1/8" ID; approx nine turns; hook term ea end, indexed 90°; mts by terminals	Applies tension to O-956 by H-916	N17-T-350006-305 1730-943952563	CTT	125241	125241	O-940	7	1	6
O-941	Same as O-938	Provides guide for O-930								
O-942	BEARING, sleeve: bearing for ribbon feed shaft; superalite; approx 1-3/16" lg x 3/8" wd x 3/8" h o/a; bore, two mtg holes	Supports and provides bearing surface for right end of O-950	N17-T-350005-990 1730-040391219	CTT	6843	6843	O-942,O-949	14	0	0
O-943	COLLAR: ribbon feed shaft; steel, nickel pl; 15° beveled edges; approx 3/16" ID x 1/2" OD x 3/16" thk o/a; mts by ID; ID tapered from ctr 0.002"	Provides bearing surface for O-984	N17-T-350001-503 1730-040868699	CTT	7067	7067	O-943,O-948	14	0	0
O-944	SPRING: helical compression type; 0.026" diam music wire; 1/4" OD x 1/2" lg o/a; approx 6-1/4 turns; closed ends	Applies tension to O-943	N17-T-350006-242	CTT	7599	7599	O-944,O-947	14	0	0
O-945	GEAR: bevel type; steel, nickel pl; straight teeth, 18 teeth; 48 pitch, 0.375" PD, 13/32" OD, 1/8" bore, 11/32" thk; straight face; hub extends 3/16" beyond face 9/32" OD; one tapped hole in hub	Drives O-979	N17-T-350012-521 1730-041525544	CTT	7068	7068	O-945,O-946	14	0	0
O-946	Same as O-945	Drives O-965								
O-947	Same as O-944	Applies tension to O-948								
O-948	Same as O-943	Provides bearing surface for O-974								
O-949	Same as O-942	Supports and provides bearing surface for left end of O-950								
O-950	SHAFT: ribbon feed; steel; approx 6-11/32" lg o/a x 1/4" diam; mts by body; fitted w/ratchet and detent collar	Operates O-945 and O-946	N17-T-350006-738 1730-043836696	CTT	8499	8499	O-950	7	0	0
O-951	PLUNGER: detent; steel; approx 7/16" lg x 1/4" diam o/a; mts by OD; rounded point, axial hole other end	Holds O-950 in one of two positions	N17-T-350001-485	CTT	7020	7020	O-951	7	0	0
O-952	SPRING: helical compression type; 0.020" diam music wire; 3/16" OD x 5/8" lg o/a; approx 13-1/2 turns; squared ends	Applies pressure to O-951	N17-T-350006-253	CTT	7659	7659	O-952	7	0	0

TABLE 8-4. COMBINED PARTS AND SPARE PARTS LIST

PARTS										EQUIPMENT SPARE PARTS	
SYMBOL DESIG.	NAME OF PART AND DESCRIPTION	FUNCTION	JAN OR NAVY TYPE DESIG.	SIGNAL CORPS STANDARD NAVY, AIR FORCE STOCK NO.	MANUFACTURERS CODE	MANUFACTURERS DESIG.	TELETYPE PART NO.	ALL SYMBOL DESIGNATIONS INVOLVED	TOTAL NO. PER EQUIP.	BOX	QUAN
0-953	BUSHING: steel, nickel pl; male; approx 19/32" lg o/a x 3/8" across flats, body threaded 11/32" lg w/3/8"-32 thd, 1/4" ID w/recess and 1/16" diam vent at bottom of hole	Provides support and guide for 0-951 and 0-952		N17-T-350001-486	CTT	7021	7021	0-953	7	0	0
0-954	Same as 0-939	Provides means for adjusting the amount 0-950 is advanced by 0-956									
0-955	SHAFT: steel; 1-5/8" lg x 5/32" diam o/a; mts by body	Supports and provides pivot for 0-956		N17-T-350006-381 1730-043836690	CTT	7029	7029	0-955	7	0	0
0-956	LEVER: ribbon feed; brass; irregular shape, one end rounded, other end formed; approx 1-5/8" lg x 1-9/32" wd x 1-1/32" h o/a; mts by body hole; csk hole radial to mtg hole, three tapped holes	Operates 0-950		N17-T-350001-504	CTT	7070	7070	0-956	7	0	0
0-957	ROLLER, lever: ribbon feed lever roller; steel; approx 1/8" thk, 5/16" OD, 3/16" ID o/a	Rides 0-935 and operates 0-956		N17-T-350001-491 1730-043455695	CTT	7027	7027	0-957,0-1368 0-1370	25	1	18
0-958	GUARD: steel, nickel pl; round shape, roller riveted to ear on circum; approx 2-7/8" lg x 2-1/4" wd x 13/16" thk o/a; mts by center hole	Protects 0-960 and guides left end of 0-961		N17-T-350007-481	CTT	70796	70796	0-958,0-975	14	0	0
0-959	BUSHING: steel, nickel pl; male; approx 19/32" lg x 3/4" across flats x 9/16" ctb ID, 5/8" diam x 1/8" thk shoulder, threaded 5/16" lg w/5/16"-32 thd	Secures 0-958 and H-922 to A-816. Provides support and guide for 0-968		N17-T-350001-494	CTT	7034	7034	0-959,0-976	14	0	0
0-960	SPOOL, printing ribbon: sheet metal black high gloss finished; 2" OD x 5/8" wd x 3/16" ID o/a; mtg hole 3/16" diam; 5/8" diam ribbon mtg drum	Holds 0-961		N17-T-350007-565	CTT	71681	71681	0-960	7	0	0
0-961	SPOOL, printing ribbon: 11 yds lg x 0.005" thk; black record ribbon, extra heavy inked, Underwood spool, 17 thds per 1/8" base ink blue	Ink supply and reverses ribbon feed mechanism by 0-967 and 0-978		N17-T-350001-535	CODO	301	7835	0-961	7	0	0

O-962	SPRING: helical compression type; 0.026" diam music wire; 1/4" OD x 5/8" lg o/a; approx eight turns; closed ends	Applies tension to O-968 through O-963	N17-T-350006-367	CTT	5363	5363	0-962,0-981	14	0	0
O-963	COLLAR, locking: steel, nickel pl; round; approx 1/4" lg x 3/8" OD; mts by ID; tapped hole for set screw	Provides seat for and adjusts tension of O-962	N17-T-350001-495	CTT	7036	7036	0-963,0-983	14	0	0
O-964	SHIM: steel; approx 5/16" OD x 3/16" ID x 0.004" thk o/a	Provides seat for O-962	N17-T-350006-251	CTT	7654	7654	0-964,0-980 0-1176,0-1349 0-1404	75	1	60
O-965	GEAR: bevel type; steel, nickel pl; straight teeth; 36 teeth, 48 pitch, 0.750" pitch diam; 25/32" OD, 3/16" bore, 5/16" thk; face dished out; hub extends 3/16" beyond face, 7/16" OD; one tapped radial hole in hub	Drives O-968	N17-T-350006-384 1730-04152540	CTT	7042	7042	0-965,0-979	14	0	0
O-966	COLLAR, locking: steel, nickel pl; round; approx 1/4" lg x 5/16" OD x 1/8" ID o/a; mts by ID; tapped hole for set screw	Positions O-971 in A-816	4T74526 N17-T-350001-790 1730-04386696	CTT	74526	74526	0-966,0-982	14	0	0
O-967	ARM: ribbon reverse; steel, nickel pl; "U" formed one end, other end curved and formed w/elongated slot; approx 2-7/32" lg x 21/32" wd x 1-7/32" h o/a; mts by two body holes in line; #6-40 thd hole in "U" formed end	Operates O-971 to cause ribbon feed mechanism to reverse	N17-T-350007-479	CTT	70794	70794	0-967	7	0	0
O-968	SHAFT: ribbon shaft; steel, nickel pl; flat on one end, spread slot other end, collar w/pin held to shaft near slotted end by dowel pin; approx 4-13/16" lg x 17/32" diam o/a, shaft 3/16" diam; mts by body	Supports and drives O-960 to wind up ribbon. Supports O-965	N17-T-350006-382	CTT	7035	7035	0-968,0-977	14	0	0
O-969	LINK, lever: steel, nickel pl; both ends rounded; approx 2-7/16" lg x 5/16" wd x 0.090" thk o/a; mts by body hole near ea end	Connects O-970 to O-972	N17-T-350001-458	CTT	6918	6918	0-969,0-987	14	0	0
O-970	ARM: steel, nickel pl; "U" formed; approx 15/16" lg x 13/32" h x 5/16" wd o/a; mts by two body holes in line; two #6-40 tapped holes	Operates O-972 by O-969	N17-T-350013-317 1730-04386672	CTT	7044	7044	0-970,0-988	14	0	0
O-971	SHAFT: ribbon reverse arm; SS; approx 4-19/32" lg x 1/8" diam o/a; mts by body	Supports O-967, O-970, and operates O-970 by O-967	N17-T-350006-383 1730-04386666	CTT	7038	7038	0-971,0-989	14	0	0

TABLE 8-4. COMBINED PARTS AND SPARE PARTS LIST

PARTS

SYMBOL DESIG.	NAME OF PART AND DESCRIPTION	FUNCTION	JAN OR NAVY TYPE DESIG.	SIGNAL CORPS STANDARD NAVY, AIR FORCE STOCK NO.	MANUFACTURERS CODE	MANUFACTURERS DESIG.	TELETYPE PART NO.	ALL SYMBOL DESIGNATIONS INVOLVED	TOTAL NO. PER EQUIP.	EQUIPMENT SPARE PARTS BOX	EQUIPMENT SPARE PARTS QUAN
0-972	PAWL: steel, nickel pl; both ends rounded, latch tooth near wd end; approx 1-1/8" lg x 15/32" h x 9/32" wd o/a; mts by csk hole near narrow end, LH mtg; spring post riveted to ctr, tapped hole at wd end	Operates 0-974		N17-T-350001-490 1730-042841080	CTT	7025	7025	0-972	7	0	0
0-973	SPRING: helical extension type; 0.014" diam music wire; approx 5/8" lg x 3/16" OD o/a; approx 19 turns; parallel hook terminals; mts by terminals	Applies tension to 0-972		N17-T-350006-478 1730-483654000	CTT	75229	75229	0-973,0-986	14	0	0
0-974	LEVER: left, ribbon reverse; steel, nickel pl; irregular shape; approx 1-5/16" lg x 1-5/32" wd x 15/32" thk; mts by body hole; spring post near ctr, tapped hole at rounded end	Changes position of 0-950 by 0-948 causing ribbon feed mechanism to reverse		N17-T-350001-488	CTT	7023	7023	0-974	7	0	0
0-975	Same as 0-958	Protects 0-960 and guides right end of 0-961									
0-976	Same as 0-959	Secures 0-975 and H-941 to A-819. Provides support and guide for 0-977									
0-977	Same as 0-968	Supports and drives 0-960 to wind up ribbon. Supports 0-979									
0-978	ARM: ribbon reverse; steel, nickel pl; irregular shape, curved and formed, hub welded to one end, slot in other end; approx 2-11/64" lg x 1-29/64" wd x 7/8" h o/a; mts by ID of hub; radial tapped hole in hub	Operates 0-989 to cause ribbon feed mechanism to reverse		N17-T-350013-537	CTT	95467	95467	0-978	7	0	0
0-979	Same as 0-965	Drives 0-977									
0-980	Same as 0-964	Provides seat for 0-981									
0-981	Same as 0-962	Applies tension to 0-977 through 0-983									
0-982	Same as 0-966	Positions 0-989 in A-819									
0-983	Same as 0-963	Provides seat for and adjusts tension of 0-981									

O-984	LEVER ASSEMBLY, left, ribbon reverse: steel, nickel pl; irregular shape; approx 1-5/16" lg x 1-5/32" wd x 15/32" thk; mts by body hole; spring post near ctr, tapped hole at rounded end	Changes position of O-950 by O-943 causing ribbon feed mechanism to reverse	N17-T-350001-487	CTT	7022	7022	O-984	7	0	0
O-985	PAWL: steel, nickel pl; both ends rounded, latch tooth near wd end; approx 1-1/8" lg x 15/32" h x 9/32" wd o/a; mts by csk hole near narrow end, RH mtg; spring post riveted to ctr, tapped hole at wd end	Operates O-984	N17-T-350001-489 1730-042841076	CTT	7024	7024	O-985	7	0	0
O-986	Same as O-973	Applies tension to O-985								
O-987	Same as O-969	Connects O-985 to O-988								
O-988	Same as O-970	Operates O-985 by O-987								
O-989	Same as O-971	Supports O-978, O-988 and operates O-988 by O-978								
O-990	LEVER: steel, nickel pl; narrow end formed, other end rounded w/csk hole; approx 1-3/4" lg x 3/8" wd x 1/4" thk o/a; mts by ctr body hole	Provides anchor for and means of adjusting tension on O-991	N17-T-350001-480	CTT	6989	6989	O-990	7	0	0
O-991	SPRING: helical extension type; 0.063" diam music wire; 7/16" OD x 2-3/4" lg o/a; approx 23-1/2 turns; hook terminals, inclined 30 deg; one terminal extended	Applies tension to O-993	N17-T-350006-683 1730-043952560	CTT	101083	101083	O-991	7	0	0
O-992	WASHER, felt: hard, white felt; round, 3/16" ID x 9/16" OD x 1/32" thk	Retains oil for O-991	N17-T-350005-817 1730-485128000	CTT	90752	90752	O-992	56	1	12
O-993	LEVER: steel, nickel pl; one end flatted, mtg end rounded; approx 3-5/16" lg x 9/16" h x 1/2" wd o/a; mts by body hole; spring post riveted near mtg hole	Operates O-935	N17-T-350001-478	CTT	6985	6985	O-993	7	0	0
O-994	CRANK, bell: bronze; irregular shape, two slots, two tapped holes; approx 1-7/8" h x 1-1/2" lg x 31/32" wd o/a; mts by slotted body hole one end	Supports O-993, H-1000, H-960, H-961 and operates O-993	N17-T-350001-441	CTT	6743	6743	O-994	7	0	0
O-995	BEARING, sleeve: approx 5/16" OD x 7/32" ID x 25/32" lg o/a	Provides pivot for O-994	N17-T-350001-479	CTT	6986	6986	O-995	7	0	0
O-996	WICK: lubrication; hard white felt; approx 1/4" lg x 1/8" diam	Retains oil for O-994	N17-T-350001-421	CTT	4813	4813	O-996	14	1	12

TABLE 8-4. COMBINED PARTS AND SPARE PARTS LIST

PARTS									EQUIPMENT SPARE PARTS	
SYMBOL DESIG.	NAME OF PART AND DESCRIPTION	FUNCTION	JAN OR NAVY TYPE DESIG.	SIGNAL CORPS STANDARD NAVY, AIR FORCE STOCK NO.	MANUFACTURERS CODE	MANUFACTURERS DESIG.	TELETYPE PART NO.	ALL SYMBOL DESIGNATIONS INVOLVED	TOTAL NO. PER EQUIP.	BOX	QUAN
0-997	SHAFT: selector bail lever; chrome vanadium; approx 2-3/8" lg x 3/8" OD o/a; mts by body; knurled end threaded 3/16" d w/1/4"-32 thd, drilled 2-1/32" d from tapped end, radial hole in approx ctr, neck near knurled end	Supports and provides pivot for 0-994. Retains 0-996, 0-998 and 0-999		N17-T-350006-356 1730-043836960	CTT	3154	3154	0-997	7	0	0
0-998	CUP, oil: steel, nickel pl; 90°; approx 3/4" lg x 9/16" h x 1/4" diam o/a, 1/2" lg shank; threaded shank 1/4"-32; hinged cap; re-threaded for lock nut	Provides means of oiling 0-994		N17-T-350005-610 1730-042834123	GT	Style "L" #1202	3329	0-998	7	0	0
0-999	WICK: hard white felt; approx 1-3/4" lg x 3/32" diam o/a	Retains oil for 0-994		N17-T-350001-418	CTT	4809	4809	0-999	7	0	0
0-1000	ROLLER, lever: steel; approx 1/4" lg x 5/8" OD x 3/16" ID o/a; mts by ID; slight shoulder ea end, rounded OD	Rides 0-1021 to operate 0-994		N17-T-350001-450	CTT	6874	6874	0-1000	7	0	0
0-1001	LEVER: clutch throw-out; steel, nickel pl; "U" formed w/2 formed arms, csk hole in one arm; approx 1-31/64" lg x 1-5/8" wd x 37/64" h o/a; mts by two holes in line; stamped "X" in vermilion ink, coated w/white shellac	Moves and holds 0-1018 out of engagement with 0-1017		N17-T-350004-628	CTT	110941	110941	0-1001	7	0	0
0-1002	SPRING: helical extension type; 0.020" diam music wire; 7/32" OD x 1" lg o/a; approx 29 turns; parallel hook terminals	Applies tension to 0-1001		N17-T-350006-395 1730-481767000	CTT	7615	7615	0-1002	7	0	0
0-1003	BRACKET, bearing retaining: "U" shape; die cast zinc alloy; approx 2" lg x 3/4" h x 5/16" thk o/a; mts by two 5/32" holes	Secures 0-1016 to A-820		N17-T-350001-637	CTT	70838	70838	0-1003,0-1004	14	0	0
0-1004	Same as 0-1003	Secures 0-1014 to A-820									
0-1005	WASHER, felt: hard white felt; round, 17/32" ID, 1-1/4" OD, 1/16" thk; graphite impr	Provides friction between 0-1006 and 0-1026 to drive 0-1026		N17-T-350005-788 1730-044645162	CTT	72883	72883	0-1005	7	0	0
0-1006	DISK: steel; approx 1-1/4" OD x 1/16" thk o/a; one 1/2" mtg hole; button welded to face	Provides seat for 0-1005		N17-T-350016-428	CTT	120553	120553	0-1006	7	0	0

O-1007	GEAR: worm; natural color bakelite; helical teeth; RH; 30 teeth; 19 pitch, 1.682" PD; 1.877" OD, 0.501" bore, 1/2" thk; concave face; mts by three equidistant ctb holes in cutout; stamped "78509" in back	Used on TT-161/FGC-38, TT-163/FGC-39, TT-164/FGC-38, or TT-164/FGC-39 when operating 60 wpm	N17-T-350006-499 1730-041525304	CTT	78509	78509	O-1007	7	0	0
O-1008	GEAR: spur; natural color bakelite; helical teeth; RH; 24 teeth; 16 pitch, 1.620" PD; 1.754" OD, 0.501" bore, 1/2" thk; face cutout; mts by three equidistant ctb holes in cutout; stamped "88945" in back	Used on TT-161/FGC-38, TT-163/FGC-39, TT-164/FGC-38, or TT-164/FGC-39 when operating 75 wpm	N17-T-350006-617	CTT	88945	88945	O-1008	7	0	0
O-1009	GEAR: spur; natural color bakelite; helical teeth; RH; 42 teeth; 30 pitch, 1.5601" PD; 1.6357" OD, 0.501" bore, 1/2" thk; face cutout; mts by three equidistant ctb holes in cutout; stamped "110877" in back	Used on TT-161/FGC-38, TT-163/FGC-39, TT-164/FGC-38, or TT-166/FGC-39 when operating 100 wpm	N17-T-350004-608	CTT	110877	110877	O-1009	7	0	0
O-1010	SHAFT ASSEMBLY: approx 6" lg o/a x 1" across flats; mts by body; hub near center, threaded shank one end, narrow end has tapped ID, two slots	Supports main shaft assembly and drives reperforator gears	N17-T-350007-666 1730-043836693	CTT	72576	72576	O-1010	7	0	0
O-1011	WICK: hard white felt; 1/4" lg x 3/32" diam o/a; graphite impr	Retains oil for O-1031	N17-T-350007-660 1730-482668000	CTT	72521	72521	O-1011	7	1	30
O-1012	WICK: lubricating wick; felt, without spring; 3/8" lg x 3/32" diam	Retains oil for O-1018	N17-T-350012-718	CTT	72522	72522	O-1012	7	1	30
O-1013	GEAR: spur; laminated phenolic, grade "L", natural color; helical teeth, RH; 16 teeth, 22 pitch, 1.208" PD, approx 1-9/32" OD, 1/2" bore, 3/8" thk o/a; straight face; mts by ID and small body hole	Drives automatic tape feed out mechanism	N17-T-350016-341 1730-041524952	CTT	209815WU	209815WU	O-1013	7	0	0
O-1014	BEARING, ball: single row radial; plain; light duty; 0.315" bore, 1.023" OD, 0.315" wd, seven balls; packed w/std slush grease; std fit; ABEC-1 std tol	Supports and provides bearing surface for one end of O-1010	N17-T-350007-684 1730-302994	CTT	72644	72644	O-1014,O-1016	14	0	0
O-1015	SHIM: steel, nickel pl; approx 9/16" OD x 5/16" ID x 0.010" thk o/a; mts by ID	Provides means for adjusting the position of H-994	N17-T-350014-932	CTT	122838	122838	O-1015	7	0	0
O-1016	Same as O-1014	Provides support and bearing surface for one end of O-1010								
O-1017	DISK, clutch: steel; approx 1/8" lg x 3/4" diam o/a; mts by ID; 16 teeth on one face, two keys on ID, extruded on rear	Drives O-1018	N17-T-350001-664 1730-040855009	CTT	72562	72562	O-1017	7	0	0

TABLE 8-4. COMBINED PARTS AND SPARE PARTS LIST

PARTS

SYMBOL DESIG.	NAME OF PART AND DESCRIPTION	FUNCTION	JAN OR NAVY TYPE DESIG.	SIGNAL CORPS STANDARD NAVY, AIR FORCE STOCK NO.	MANUFACTURERS CODE	MANUFACTURERS DESIG.	TELETYPE PART NO.	ALL ! DESIGNATIONS INVOLVED	TOTAL NO. PER EQUIP.	EQUIPMENT SPARE PARTS BOX	EQUIPMENT SPARE PARTS QUAN
0-1018	HUB: clutch; steel; approx 25/32" lg x 15/16" OD x 1/2" ID o/a; mts by ID; 16 teeth on one end, face cam on body, four drive dogs on other end	Drives 0-1021		N17-T-350006-432 1730-040855003	CTT	74502	74502	0-1018	7	0	0
0-1019	SPRING: helical compression type; 0.055" diam music wire; 29/32" OD x 3/4" lg o/a; approx 6-1/2 turns; closed ends	Applies pressure to 0-1018 when operating 60 or 75 wpm		N17-T-350006-380	CTT	6993	6993	0-1019	7	0	0
0-1020	SPRING: helical compression type; 0.055" diam music wire; 29/32" OD x 29/32" lg o/a; approx 6-1/2 turns; closed ends	Applies pressure to 0-1018 when operating 100 wpm		N17-T-350004-609	CTT	110878	110878	0-1020	7	0	0
0-1021	CAM: main bail; steel; approx 1/2" lg x 1-3/8" OD x 1/2" ID o/a; mts by ID; hub w/4 slots, two #6-40 thd holes through cam	Drives 0-1022 and 0-1024. Operates 0-994 by 0-1000		N17-T-350011-497 1730-040723151	CTT	101436	101436	0-1021	7	0	0
0-1022	BEARING, sleeve: bearing for main bail cam; steel; 1-15/32" lg x 1-1/4" h x 7/8" wd x 3/8" ID o/a, oval shoulder 1/8" lg w/2 holes, three body holes connecting w/internal spiral oil groove	Supports 0-1021 and 0-1024. Drives 0-1024 by 0-1021		N17-T-350001-678	CTT	73107	73107	0-1022	7	0	0
0-1023	WASHER, felt: hard white felt; round, 3/8" ID, 9/16" OD, 1/8" thk; graphite impr, cut through at one point	Retains oil for 0-1022		N17-T-350006-273	CTT	7824	7824	0-1023,0-1531	8	0	0
0-1024	CAM: punch; steel; approx 1-1/2" lg x 1-3/8" wd x 3/32" thk o/a; mts by ID and two axial holes; stamped "TOP"; two radial grooves in body	Operates 0-1075 by 0-1072		N17-T-350010-608 1730-040723135	CTT	95460	95460	0-1024	7	0	0
0-1025	SPRING: helical compression type; 0.051" diam music wire; 23/32" OD x 7/8" lg o/a; approx 3-1/2 turns; squared ends	Applies pressure to 0-1026		N17-T-350006-416 1730-043952878	CTT	72885	72885	0-1025	7	0	0
0-1026	DISK, friction: steel; approx 9/32" lg x 1-1/4" diam o/a; mts by ID; two prongs on hub	Drives 0-1005		N17-T-350004-655	CTT	111686	111686	0-1026	7	0	0
0-1027	RETAINER: cam assembly; steel, nickel pl; approx 3/4" lg x 15/16" diam o/a; one end threaded #10-32 LH thd; marked "LEFT H THREAD"; hole through center, radial hole at shoulder, drive slot	Secures selector cam sleeve mechanism to 0-1010		N17-T-350004-996 1730-041105163	CTT	91266	91266	0-1027	7	0	0

O-1028	WASHER, felt: hard white felt; round, 1/4" ID, 15/16" OD, 1/16" thk; graphite impr	Provides friction between O-1027 and O-1029 to form friction clutch	N17-T-350005-772 1730-481570000	CTT	6861	6861	O-1028,O-1033	14	0	0
O-1029	DISK, cam sleeve: steel, nickel pl; approx 15/16" OD x 1/4" ID x 0.049" thk o/a; mts by ID; "V" notch in circum, groove across ID, cak hole through one end of groove	Drives O-1031 by O-1028 to form friction clutch	N17-T-350001-449 1730-041105167	CTT	6863	6863	O-1029,O-1032	14	0	0
O-1030	WASHER, felt: hard, white felt; round, 1/2" ID x 11/16" OD x 1/16" thk	Retains oil for O-1031	N17-T-350012-719 1730-482676000	CTT	72563	72563	O-1030	7	1	6
O-1031	CAM ASSEMBLY: c/o nine cams w/sleeve and spacers, soldered together; steel; approx 1-3/16" lg x 1-3/16" diam o/a; mts by ID; one cam stamped "M" on arm formed at end; two tongues on ea end	Operates O-1001; O-1120, O-1127, O-1128, O-1131, O-1132, O-1133, O-1143 and O-1156	N17-T-350004-995 1730-040725137	CTT	91265	91265	O-1031	7	0	0
O-1032	Same as O-1029	Provides seat for O-1033 to form friction clutch								
O-1033	Same as O-1028	Provides friction between O-1032 and O-1034 to form friction clutch								
O-1034	DISK, cam sleeve: steel, nickel pl; approx 15/16" OD x 1/4" ID x 7/32" thk o/a; mts by ID; "V" notch in circum hub w/2 slots one side	Provides seat for O-1033 to form friction clutch	N17-T-350001-662 1730-041105171	CTT	72513	72513	O-1034	7	0	0
O-1035	SPRING: helical compression type; 0.063" diam music wire; approx 5/8" lg x 47/64" diam o/a; approx four turns; closed both ends	Provides pressure on O-1034 to form friction clutch -	4T72514 N17-T-350006-415 1730-043952557	CTT	72514	72514	O-1035	7	0	0
O-1036	SPRING: helical compression type; 0.016" diam music wire; 1/4" OD x 1" lg o/a; 14 turns; closed ends	Applies pressure to O-1038 by O-1037	N17-T-350010-590 1730-043952581	CTT	95430	95430	O-1036,O-1343	16	1	9
O-1037	CRANK, bell: shift; steel, nickel pl; "L" shape, notched one end, hub welded at corner; approx 1-3/8" lg x 1-31/64" h x 9/32" thk o/a; mts by ID of hub	Operates O-803 and O-1041 by O-1038	N17-T-350010-581 1730-040036832	CTT	95406	95406	O-1037	7	0	0
O-1038	SHAFT: platen; steel, nickel pl; approx 3-1/2" lg x 1/4" diam o/a; mts by body; 3/16" diam shank one end, two radial tapped holes	Supports O-1036, O-1037, O-1039 and O-1041. Shifts O-1041 back and forth for printing upper or lower characters on the type bars	N17-T-350010-612 1730-043836684	CTT	95474	95474	O-1038	7	0	0
O-1039	SPRING: helical compression type; 0.024" diam music wire; 5/16" OD x 1-3/8" lg o/a; 11 turns; closed ends	Applies pressure to O-1041	N17-T-350010-616 1730-043952539	CTT	95478	95478	O-1039	7	0	0

TABLE 8-4. COMBINED PARTS AND SPARE PARTS LIST

PARTS										EQUIPMENT SPARE PARTS	
SYMBOL DESIG.	NAME OF PART AND DESCRIPTION	FUNCTION	JAN OR NAVY TYPE DESIG.	SIGNAL CORPS STANDARD NAVY, AIR FORCE STOCK NO.	MANUFACTURERS CODE	MANUFACTURERS DESIG.	TELETYPE PART NO.	ALL SYMBOL DESIGNATIONS INVOLVED	TOTAL NO. PER EQUIP.	BOX	QUAN
O-1040	PLATEN, teletypewriter: polyvinyl plastic; cylindrical shape; approx 11/32" lg x 1/4" diam o/a; mts by OD	Provides cushion for blow of type bar pallet against tape		N17-T-350012-296	CTT	111603	111603	O-1040	7	1	6
O-1041	BLOCK, platen: steel, nickel pl; approx 29/32" lg x 11/16" wd x 5/16" thk o/a; mts by 1/4" diam body hole; ctb pilot hole drilled to mtg hole, two tapped holes drilled to ctb of pilot hole	Provides support for O-1040 and shifts back and forth to print upper or lower character of the type bars		N17-T-350010-615	CTT	95477	95477	O-1041	7	1	6
O-1042	SHAFT: steel, nickel pl; 1-15/32" lg x 3/16" across flats; one end threaded 3/16" lg w/#4-40 thd; other end round and chamfered	Provides guide for O-1041		N17-T-350010-617	CTT	95479	95479	O-1042	7	0	0
O-1043	COLLAR, locking: steel, nickel pl; approx 3/16" lg x 5/16" OD x 1/4" ID; locking hole through both sides	Locates O-1041 on O-1038		N17-T-350010-613 1730-040868703	CTT	95475	95475	O-1043	7	0	0
O-1044	SHIM: adjusting; steel; round; approx 3/8" OD x 1/4" ID x 0.010" thk o/a; mts by ID	Provides means of adjusting position of O-1041 on O-1038		N17-T-350007-821	CTT	73419	73419	O-1044	56	1	12
O-1045	LEVER: shift; steel, nickel pl; irregular shape, two mtg ears formed in line, two notches one end; approx 2-3/32" lg x 13/16" wd x 11/16" h o/a; mts by two holes in line; two csk holes in line	Locks platen in position so as lower characters on type pallet is printed. Also releases platen when upper characters are to be printed		N17-T-350010-583 1730-042355129	CTT	95409	95409	O-1045	7	0	0
O-1046	SHIM: flat; steel; round, 9/64" ID, 5/16" OD, 0.004" thk	Provides means of adjusting position of O-1045 on H-1004		N17-T-350013-130 1730-043837276	CTT	8896	8896	O-1046,O-1103 O-1308,O-1385 O-1394	416	1	84
O-1047	SHIM: steel; 5/16" OD x 3/16" ID x 0.002" thk o/a	Provides means of adjusting position of O-1045 on H-1004		N17-T-350010-750	CTT	96874	96874	O-1047	28	1	12
O-1048	BEARING, sleeve: steel; approx 3/8" lg x 5/16" across flats of hex shoulder, 9/64" ID, 1/8" ID one end, one end threaded 1/4"-32 thd	Supports and provides bearing surface for one end of O-1069		N17-T-350003-509 1730-040628166	CTT	96837	96837	O-1048	7	0	0
O-1049	PLATE, spacer: steel, nickel pl; square shape; approx 11/16" lg x 5/8" wd x 1/8" thk o/a; mts by two body holes	Provides clearance between A-820 and A-821		N17-T-350010-593	CTT	95440	95440	O-1049	7	0	0

O-1050	PLATE: tape stripper; steel, nickel pl; sq shape, one side formed, notch in other side, formed wing one end; approx 1-3/32" lg x 29/32" wd x 5/8" h o/a; mts by two body holes in wing	Provides guide for tape	N17-T-350011-241	CTT	98702	98702	O-1050	7	0	0
O-1051	SHIM: steel; approx 5/16" OD x 5/32" ID x 0.004" thk o/a; mts by ID	Provides means of adjusting position of O-1052	N17-T-350002-349	CTT	82392	82392	O-1051,O-1178 O-1180	99	1	12
O-1052	SHAFT: tape tension; steel, nickel pl; approx 1-3/8" lg x 1/4" across flats o/a; mts by threaded ends; one end threaded 3/16" lg w/#4-40 thd, opposite end threaded 7/32" lg w/#6-40 thd, key slot in shank	Supports and provides pivot for O-1053 and O-1054	N17-T-350007-823	CTT	73482	73482	O-1052	7	0	0
O-1053	LEVER, tape tension: steel, nickel pl; approx 11/16" lg x 5/8" wd x 3/4" h o/a; 0.035" thk material; mts by hole in ea formed side; irregular shape w/2 sides formed, irregularly formed arm w/elongated slot	Applies tension to tape by O-1054	N17-T-350015-653	CTT	121995	121995	O-1053	7	0	0
O-1054	SPRING: torsion type; for tape tension lever; 0.030" diam music wire; approx 7/32" diam x 11/32" h x 9/16" lg o/a; 15 turns; LH turns; hook terminal; terminal bent 35°	Applies tension to O-1053	N17-T-350004-635	CTT	110974	110974	O-1054	7	0	0
O-1055	BRACKET: spring support; irregular shape, one side cutout and formed; steel, nickel pl; 1-3/16" lg x 13/32" wd x 9/32" thk o/a; mts by two body holes	Retains punch stripper springs	N17-T-350003-451	CTT	95457	95457	O-1055	7	0	0
O-1056	SPRING: helical compression type; 0.010" diam music wire; 3/32" OD x 9/32" lg o/a; approx nine turns; plain ends	Applies pressure to O-1057 or O-1058	N17-T-350003-450	CTT	95456	95456	O-1056	42	0	0
O-1057	STRIPPER: code punch stripper; steel; approx 21/64" lg x 3/32" OD o/a; mts by 5/64" OD x 1/8" lg shank	Clears the code punch holes in O-1059	N17-T-350010-606	CTT	95454	95454	O-1057	35	0	0
O-1058	STRIPPER: feed punch; steel; approx 21/64" lg x 3/32" OD; mts by body shank	Clears the feed punch hole in O-1059	N17-T-350010-607	CTT	95455	95455	O-1058	7	0	0
O-1059	PLATE, guide: steel; guide plate and die plate tied together, rectangular shape; approx 1-7/64" lg x 3/4" wd x 13/64" thk o/a; mts by three body holes and elongated slot; imprinted "FELETYPE" in scroll; six guide holes in row, cutout in die plate, tape guide slot through both plates	Guides O-1063 and O-1064 while perforating the tape	N17-T-350010-604	CTT	95452	95452	O-1059	7	0	0

TABLE 8-4. COMBINED PARTS AND SPARE PARTS LIST

PARTS										EQUIPMENT SPARE PARTS	
SYMBOL DESIG.	NAME OF PART AND DESCRIPTION	FUNCTION	JAN OR NAVY TYPE DESIG.	SIGNAL CORPS STANDARD NAVY, AIR FORCE STOCK NO.	MANUFACTURERS CODE	MANUFACTURERS DESIG.	TELETYPE PART NO.	ALL SYMBOL DESIGNATIONS INVOLVED	TOTAL NO. PER EQUIP.	BOX	QUAN
O-1061	SPRING: helical compression type; 0.024" diam music wire; approx 1/8" OD x 1/2" lg o/a; approx 13 turns; squared ends	Applies pressure to O-1062		N17-T-350006-326	CTT	125262	125262	O-1061	14	0	0
O-1062	PLATE, guide: steel; approx 21/32" lg x 1/4" wd x 0.095" thk o/a; mts by edges; six guide holes in row	Retracts O-1063 or O-1064 by O-1061		N17-T-350004-620	CTT	110901	110901	O-1062	7	0	0
O-1063	PUNCH, perforator: steel; approx 1-1/8" lg x 3/32" diam o/a; mts by body; one end cupped	Perforates the code holes in the tape		N17-T-350001-230	CTT	125493	125493	O-1063	35	0	0
O-1064	PUNCH: small-fin; approx 1-15/64" lg x 3/32" diam o/a; steel, ground and polished; carbon steel points; point 3/16" lg x 3/64" diam welded to one end, other end point shank 5/16" lg x 5/64" diam w/groove under shoulder, groove on body shank	Perforates the feed holes in the tape		N17-T-350002-933	CTT	89500	89500	O-1064	7	0	0
O-1066	SPACER: steel, nickel pl; approx 7/32" lg x 5/16" OD x 1/4" ID; mts by ID	Provides the proper mounting height of one end of the tape chute		N17-T-350003-517	CTT	96845	96845	O-1066	7	0	0
O-1067	SPRING: flat type; tape guide; 0.007" steel strip; approx 7/8" lg x 1/4" wd x 13/32" h o/a; one mtg hole	Guides tape from the tape chute into the punch block		N17-T-350006-654 1730-041693580	CTT	96846	96846	O-1067	7	0	0
O-1069	ROLLER, tape: steel, nickel pl; approx 2-11/32" lg x 7/16" diam o/a; mts by plain, shank ea end; 12 ratchet teeth and 12 pins on body, one end threaded, square shoulder	Feeds tape through the punch block		N17-T-350012-249 1730-041390006	CTT	110682	110682	O-1069	7	0	0
O-1070	GUIDE, ribbon: steel, nickel pl; approx 1-1/2" lg x 7/8" wd x 3/16" thk o/a; mts by body; 1/16" rod irregularly formed	Guides ribbon over the platen block		N17-T-350010-602	CTT	95449	95449	O-1070	7	0	0
O-1071	WHEEL, detent: steel, nickel pl; approx 3/16" lg x 3/4" diam o/a; mts by partially squared hole; 12 teeth on OD, slot on hub	Meters the amount of tape fed through the punch block		N17-T-350002-784	CTT	86920	86920	O-1071	7	0	0
O-1072	ROLLER, cam: steel; approx 7/32" lg x 7/8" OD; mts by ID; rounded on OD	Rides on O-1024 to operate O-1075		N17-T-350010-625 1730-043455712	CTT	95493	95493	O-1072	7	0	0

O-1073	ROLLER: steel; no dimension of this item is greater than one inch	Rides on O-1166 to operate O-1075 during automatic tape feed out	4T209454 N17-T-350016-262 1730-043455720	CTT	209454WU	209454WU	O-1073	4	0	0
O-1074	SPACER: steel; round 1/4" ID, 9/16" OD, 1/32" thk	Provides clearance between O-1073 and O-1075	N17-T-350016-249 1730-043948130	CTT	209453WU	209453WU	O-1074	4	0	0
O-1075	ARM: aluminum bronze; irregular shape casting; approx 7" lg x 1-7/8" wd x 2-5/8" h o/a; mts by ID of two press fitted bushings; CTT #75226 oil wick inserted in well at end of ea mtg hole, #72263 spring post in top, notch one end w/2 holes in line, one #6-40 thd hole and one body hole	Operates O-1091 by O-1082 and O-1083	N17-T-350016-745	CTT	129993	129993	O-1075	7	0	0
O-1076	SPRING: helical extension type; 0.024" diam music wire; 3/16" OD x 13/16" lg o/a; approx 23 turns; hook term, indexed 90°	Applies tension to O-1078	N17-T-350006-363	CTT	4705	4705	O-1076	7	1	6
O-1077	SPACER: steel, nickel pl; approx 5/32" lg x 7/16" OD x 1/8" ID; mts by ID	Provides the proper mounting distance from base for O-1078	N17-T-350010-624	CTT	95491	95491	O-1077	7	0	0
O-1078	DETENT: steel, nickel pl; "L" shape, detent roller on one end, csk hole in other end; approx 1-19/32" lg x 25/32" h x 3/16" thk o/a; mts by 5/16" hole in corner of "L"	Meters the tape fed through the punch block by riding in and out of the teeth of O-1071	N17-T-350001-293	CTT	125686	125686	O-1078	7	0	0
O-1079	BUSHING: steel, nickel pl; eccentric body hole; no dimension of this item is greater than one inch	Provides means for adjusting the position of O-1078	N17-T-350005-391	CTT	125683	125683	O-1079	7	0	0
O-1080	CHUTE, tape: nickel silver or stainless steel; approx 4-13/16" lg x 49/64" wd x 23/64" thk o/a; mts by two holes csk for No 4 screw located 3-1/8" apart	Guides the tape into the punch blocks	N17-T-350003-680	CTT	98678	98678	O-1080	7	0	0
O-1081	BEARING, sleeve: steel; 5/16" OD x 1/8" ID x 3/16" lg o/a, shoulder 3/64" lg, body 3/16" OD	Provides a pivot for O-1083	N17-T-350003-462	CTT	95492	95492	O-1081	7	0	0
O-1082	LINK: steel, nickel pl; one end curved and rounded, other end rounded w/rectangular ear one side; approx 2-1/2" lg x 9/16" wd x 0.095" thk o/a; mts by #6-40 tapped hole ea end	Connects O-1083 to O-1091 and provides means for adjusting travel of O-1091	N17-T-350010-623	CTT	95489	95489	O-1082	7	0	0
O-1083	LINK: steel, nickel pl; both ends rounded, ear w/slot near wd end; approx 2-7/16" lg x 19/32" wd x 0.095" thk o/a; mts by two elongated slots in body; body hole in wd end	Connects O-1075 to O-1082	N17-T-350010-622	CTT	95488	95488	O-1083	7	0	0

TABLE 8-4. COMBINED PARTS AND SPARE PARTS LIST

PARTS										EQUIPMENT SPARE PARTS	
SYMBOL DESIG.	NAME OF PART AND DESCRIPTION	FUNCTION	JAN OR NAVY TYPE DESIG.	SIGNAL CORPS STANDARD NAVY, AIR FORCE STOCK NO.	MANUFACTURERS CODE	MANUFACTURERS DESIG.	TELETYPE PART NO.	ALL SYMBOL DESIGNATIONS INVOLVED	TOTAL NO. PER EQUIP.	BOX	QUAN
0-1084	CRANK, bell: steel, nickel pl; "L" shape; approx 1-5/32" lg x 1-3/64" h x 0.035" thk o/a; mts by corner body hole; two body holes	Transfers the motion of 0-1109 to 0-1089		N17-T-350003-440 1730-041036796	CTT	95421	95421	0-1084	7	0	0
0-1085	CRANK, bell: steel, nickel pl; shape; approx 1-5/32" lg x 1-1/8" h x 0.035" thk o/a; mts by corner body hole; two body holes	Transfers the motion of 0-1110 to 0-1197		N17-T-350010-586	CTT	95422	95422	0-1085	7	0	0
0-1086	CRANK, bell: steel, nickel pl; "L" shape; approx 1-5/32" lg x 1-13/64" h x 0.035" thk o/a; mts by corner body hole; two body holes	Transfers the motion of 0-1111 to 0-1198		N17-T-350003-441 1730-040036828	CTT	95423	95423	0-1086	7	0	0
0-1087	CRANK, bell: steel, nickel pl; "L" shape; approx 1-5/32" lg x 1-9/32" h x 0.035" thk o/a; mts by corner body hole; two body holes	Transfers the motion of 0-1112 to 0-1199		N17-T-350003-442 1730-040036824	CTT	95424	95424	0-1087	7	0	0
0-1088	CRANK, bell: steel, nickel pl; "L" shape; approx 1-5/32" lg x 1-23/64" h x 0.035" thk o/a; mts by corner body hole; two body holes	Transfers the motion of 0-1113 to 0-1200		N17-T-350003-443 1730-040036820	CTT	95425	95425	0-1088	7	0	0
0-1089	BAR, selector: steel; rectangular shape, two notches one side; approx 2-1/4" lg x 3/16" wd x 0.053" thk o/a; mts by body	Operates the punch to perforate the No 1 code hole in the tape		N17-T-350010-597	CTT	95444	95444	0-1089,0-1197 0-1198,0-1199 0-1200	35	0	0
0-1090	SPRING: helical extension type; 0.010" diam music wire; 1/8" OD x 15/16" lg o/a; approx 70 turns; hook term, indexed 90°	Applies tension to the punch selector fingers		N17-T-350010-589 1730-043952653	CTT	95428	95428	0-1090	35	0	0
0-1091	BAIL: steel, nickel pl; formed on all four sides; approx 4-1/8" lg x 2-3/4" wd x 1" thk o/a; mts by two body holes in line; two plain holes, three tapped holes and five slots in line in two ends	Supports and operates the punch selector fingers by 0-1082 and 0-1075. Feeds the tape through the punch block by supporting and operating 0-1093		N17-T-350010-594	CTT	95441	95441	0-1091	7	0	0
0-1092	BEARING, sleeve: steel; 5/16" OD x 1/8" ID x 1/8" lg o/a; shoulder 1/32" lg, body 3/16" OD	Provides a pivot for 0-1091		N17-T-350003-461	CTT	95490	95490	0-1092	7	0	0

0-1093	PAWL: feed; steel, nickel pl; irregular "L" shape, latching cutout one end, csk hole other end; approx 1-17/32" lg x 25/32" wd x 0.095" thk o/a; mts by body hole	Operates 0-1069 by 0-1091	N17-T-350010-599	CTT	95446	95446	0-1093	7	0	0
0-1094	ECCENTRIC: steel, nickel pl; approx 5/32" lg x 5/16" across hex flats; mts by #6-40 thd eccentric ID	Provides means of adjusting position of 0-1093	N17-T-350010-600 1730-041262132	CTT	95447	95447	0-1094	7	0	0
0-1095	SPRING: helical extension type; 0.014" diam music wire; approx 15/32" lg x 5/32" OD x 1/8" ID o/a; approx 16 turns; parallel hook term ea end; mts by terms	Applies tension to 0-1093	N17-T-350006-393 1730-481766000	CTT	7603	7603	0-1095,0-1142	14	1	6
0-1096	PLATE, spacer: nickel silver; irregular shape, slot one corner; approx 1-1/4" lg x 1" wd x 0.020" thk o/a; mts by hole in corner	Provides clearance between 0-1097 and H-1081	N17-T-350010-591	CTT	95436	95436	0-1096,0-1201 0-1203,0-1205 0-1207,0-1209	42	0	0
0-1097	CRANK, bell: code bar; steel; irregular "Y" shape, finger and two steps one end; approx 1-7/16" lg x 1-3/16" h x 0.045" thk o/a; mts by body hole	Transfers the motion of 0-918 to 0-1104	N17-T-350004-243 1730-041036776	CTT	103316	103316	0-1097	7	0	0
0-1098	Same as 0-917	Provides pivot for 0-1097								
0-1099	CRANK, bell: code bar; steel; irregular "Y" shape, finger and two steps one end; approx 1-3/8" lg x 1-3/16" h x 0.045" thk o/a; mts by body hole	Transfers the motion of 0-919 to 0-1105	N17-T-350004-244 1730-040036804	CTT	103317	103317	0-1099	7	0	0
0-1100	CRANK, bell: code bar; steel; irregular "Y" shape, finger and two steps one end; approx 1-19/64" lg x 1-3/16" h x 0.045" thk o/a; mts by body hole	Transfers the motion of 0-920 to 0-1106	N17-T-350004-245	CTT	103318	103318	0-1100	7	0	0
0-1101	CRANK, bell: code bar; steel; irregular "Y" shape, finger and two steps one end; approx 1-7/32" lg x 1-3/16" h x 0.045" thk o/a; mts by body hole	Transfers the motion of 0-921 to 0-1107	N17-T-350013-525 1730-040036808	CTT	103319	103319	0-1101	7	0	0
0-1102	CRANK, bell: code bar; steel, irregular "Y" shape, finger and two steps one end; approx 1-1/8" lg x 1-3/16" h x 0.045" thk o/a; mts by body hole	Transfers the motion of 0-922 to 0-1108	N17-T-350004-247 1730-040036812	CTT	103320	103320	0-1102	7	0	0
0-1103	Same as 0-1046	Provides means for adjusting the mounting height of 0-1209 and 0-1102								

TABLE 8-4. COMBINED PARTS AND SPARE PARTS LIST

PARTS

SYMBOL DESIG.	NAME OF PART AND DESCRIPTION	FUNCTION	JAN OR NAVY TYPE DESIG.	SIGNAL CORPS STANDARD NAVY, AIR FORCE STOCK NO.	MANUFACTURERS CODE	MANUFACTURERS DESIG.	TELETYPE PART NO.	ALL SYMBOL DESIGNATIONS INVOLVED	TOTAL NO. PER EQUIP.	EQUIPMENT SPARE PARTS BOX	EQUIPMENT SPARE PARTS QUAN
O-1104	LINK: steel, nickel pl; one edge straight, other edge angular; approx 3-9/64" lg x 5/16" wd x 0.035" thk o/a; mts by body hole in wd p/o body	Transfers the motion of O-1097 to O-1109		N17-T-350003-430	CTT	95401	95401	O-1104	7	0	0
O-1105	LINK: steel, nickel pl; one edge straight, other edge angular; approx 3-5/64" lg x 5/16" wd x 0.035" thk o/a; mts by body hole in wd p/o body	Transfers the motion of O-1099 to O-1110		N17-T-350003-431	CTT	95402	95402	O-1105	7	0	0
O-1106	LINK: steel, nickel pl; one edge straight, other edge angular; approx 3" lg x 5/16" wd x 0.035" thk o/a; mts by body hole in wd p/o body	Transfers the motion of O-1100 to O-1111		N17-T-350003-432	CTT	95403	95403	O-1106	7	0	0
O-1107	LINK: steel, nickel pl; one edge straight, other edge angular; approx 2-15/16" lg x 5/16" wd x 0.035" thk o/a; mts by body hole in wd p/o body	Transfers the motion of O-1101 to O-1112		N17-T-350003-433	CTT	95404	95404	O-1107	7	0	0
O-1108	LINK: steel, nickel pl; one edge straight, other edge angular; approx 2-55/64" lg x 5/16" wd x 0.035" thk o/a; mts by body hole in wd p/o body	Transfers the motion of O-1102 to O-1113		N17-T-350010-580	CTT	95405	95405	O-1108	7	0	0
O-1109	CRANK, bell: steel, nickel pl; "L" shape, one end rounded, notch near other end; approx 53/64" lg x 1-1/64" h x 0.035" thk o/a; mts by corner body hole	Transfers the motion of O-1104 to O-1084		N17-T-350003-434 1730-041036784	CTT	95411	95411	O-1109	7	0	0
O-1110	CRANK, bell: steel, nickel pl; "L" shape, one end rounded, notch near other end; approx 15/16" lg x 1-3/64" h x 0.035" thk o/a; mts by corner body hole	Transfers the motion of O-1105 to O-1085		N17-T-350003-435 1730-040036836	CTT	95412	95412	O-1110	7	0	0
O-1111	CRANK, bell: steel, nickel pl; "L" shape, one end rounded, notch near other end; approx 1-1/8" lg x 1-9/64" h x 0.035" thk o/a; mts by corner body hole	Transfers the motion of O-1106 to O-1086		N17-T-350003-436	CTT	95413	95413	O-1111	7	0	0

O-1112	CRANK, bell: steel, nickel pl; "L" shape, one end rounded, notch near other end; approx 1-15/64" lg x 1-5/32" h x 0.035" thk o/a; mts by corner body hole	Transfers the motion of O-1107 to O-1087	N17-T-350003-437 1730-041036788	CTT	95414	95414	0-1112	7	0	0	
O-1113	CRANK, bell: steel, nickel pl; "L" shape, one end rounded, notch near other end; approx 1-21/64" lg x 1-11/64" h x 0.035" thk o/a; mts by corner body hole	Transfers the motion of O-1108 to O-1088	N17-T-350003-438 1730-041036792	CTT	95415	95415	0-1113	7	0	0	
O-1114	BEARING, sleeve: steel; 11/64" OD x 7/64" ID x 3/64" lg o/a	Provides pivot for O-1109, O-1110, O-1111, O-1112 or O-1113	N17-T-350003-439	CTT	95416	95416	0-1114	35	0	0	
O-1115	PLATE, spacer: nickel silver; rectangular, one end rounded; approx 23/32" lg x 5/16" wd x 0.036" thk; mtg hole in rounded end	Separates H-1095 and O-1109	N17-T-350010-584	CTT	95417	95417	0-1115,0-1210 0-1211,0-1212 0-1213,0-1214	42	0	0	
O-1116	SPRING: helical extension type; 0.020" diam music wire; approx 7/8" lg x 5/32" OD x 1/8" ID o/a; approx 31 turns; hook terminal ea end indexed 90°; mts by terminals	Applies tension to O-1156	N17-T-350006-364 1730-481426000	CTT	4708	4708	0-1116	7	0	0	
O-1117	WICK: hard white felt; 15/16" lg x 3/32" diam; graphite impr	Retains oil for O-1116	N17-T-350007-838	CTT	73611	73611	0-1117	7	0	0	
O-1118	SPRING: helical extension type; 0.014" diam music wire; 5/32" OD x 1" lg o/a; approx 16-1/2 turns; parallel hook terminals; one terminal extended 5/8" lg	Applies tension to O-1132 when reperforator operates at 60 or 75 wpm	N17-T-350006-633 1730-043952509	CTT	90510	90510	0-1118	7	0	0	
O-1119	SPRING: helical extension type; 0.018" diam music wire; 5/32" OD x 1-3/32" lg o/a; parallel hook terminal; one terminal extended 5/8" lg	Applies tension to O-1132 when reperforator operates at 100 wpm	N17-T-350012-269	CTT	110880	110880	0-1119	7	0	0	
O-1120	LEVER: steel; irregular "Y" shape, one end formed w/beveled edge; approx 1-29/32" h x 1-1/32" lg x 13/64" wd o/a; mts by body hole near ctr; osk hole at bottom of "Y"	Rides O-1031 and locks O-1152 in the marking or spacing position as each impulse is received	N17-T-350004-935	CTT	90505	90505	0-1120	7	1	6	
O-1121	SPRING: helical extension type; 0.014" diam music wire; 5/32" OD x 5/8" lg o/a; approx 25 turns; parallel hook term	Applies tension to O-1120 when the reperforator operates at 60 or 75 wpm	N17-T-350006-638 1730-043952512	CTT	91120	91120	0-1121	7	1	6	
O-1122	SPRING: helical extension type; 0.013" diam music wire; approx 15/32" lg x 1/8" OD x 3/32" ID o/a; approx 20 turns; parallel hook terminal ea end; mts by terminals	Applies tension to O-1120 when the reperforator operates at 100 wpm	N17-T-350012-705	CTT	2605	2605	0-1122	7	0	0	

TABLE 8-4. COMBINED PARTS AND SPARE PARTS LIST

PARTS										EQUIPMENT SPARE PARTS	
SYMBOL DESIG.	NAME OF PART AND DESCRIPTION	FUNCTION	JAN OR NAVY TYPE DESIG.	SIGNAL CORPS STANDARD NAVY, AIR FORCE STOCK NO.	MANUFACTURERS CODE	MANUFACTURERS DESIG.	TELETYPE PART NO.	ALL SYMBOL DESIGNATIONS INVOLVED	TOTAL NO. PER EQUIP.	BOX	QUAN
0-1123	WICK: lubricating wick; hard white felt, w/o spring; 1/2" lg x 3/32" diam o/a	Provides oil for 0-1122 when reperforator operates at 100 wpm		N17-T-350001-801 1730-044796616	CTT	74553	74553	0-1123	7	0	0
0-1124	Same as 0-714	Provides clearance between A-829 and 0-1125									
0-1125	PLATE, guide: nickel silver; approx 2-5/8" h x 2-1/8" lg x 0.015" thk o/a; mts by 5/32" diam holes; two body holes, one elongated body hole w/2 elongated rectangular slots	Provides seat for 0-1120		N17-T-350002-496	CTT	83920	83920	0-1125	7	0	0
0-1126	PLATE, guide: nickel silver; irregular shape w/formed wing in ctr; approx 2-5/8" h x 2-1/8" lg x 0.070" wd o/a; mts by six 5/32" diam holes; three body holes, one elongated hole below wing, rectangular slot on ea side of wing, one extruded disk	Guides 0-1130 and 0-1131		N17-T-350001-436	CTT	6689	6689	0-1126,0-1234 0-1236,0-1239 0-1243,0-1247	42	0	0
0-1127	LEVER: right selector; steel; irregular "T" shape, cir cut-out lower end; approx 1-15/32" h x 1-9/32" wd x 0.045" thk o/a; mts by body hole; csk hole at mtg end	Operates 0-1238		N17-T-350001-537	CTT	8157	8157	0-1127,0-1232	14	1	6
0-1128	LEVER: left selector; steel; irregular "L" shape, ear w/csk hole at corner, cir cutout one end; approx 1-21/32" lg x 1-3/16" h x 0.045" thk o/a; mts by corner body hole, LH mtg	Operates 0-1130		N17-T-350001-538	CTT	8158	8158	0-1128,0-1231 0-1233	21	1	6
0-1129	SPRING: helical extension type; 0.020" diam music wire; 1/8" OD x 25/32" lg o/a; approx 25 turns; hook terminal, indexed 90°	Applies tension to 0-1127, 0-1128, 0-1231, 0-1232 or 0-1233		N17-T-350006-394 1730-481774000	CTT	7614	7614	0-1129	35	1	6
0-1130	BAR, selector: steel; one end pointed, other end rounded w/2 arms; approx 1-3/4" lg x 1-5/64" wd x 0.045" thk o/a; mts by body hole	Operates 0-1131		N17-T-350001-434	CTT	6685	6685	0-1130,0-1238 0-1241,0-1245 0-1249	35	1	6
0-1131	LEVER: nickel steel; "T" shape; approx 17/32" lg x 19/32" wd x 0.051" thk o/a; mts by body hole	Operates 0-918		N17-T-350001-435	CTT	6686	6686	0-1131,0-1237 0-1240,0-1244 0-1248	35	1	6

O-1132	DETENT: steel, nickel pl; approx 57/64" lg x 3/8" wd x 0.036" thk o/a; mts by body hole in wd end; csk hole near ctr, irregular shaped detent cutout in narrow end	Guides and provides means for adjusting travel of O-1152	N17-T-350009-861 1730-485120280	CTT	90509	90509	O-1132	7	1	6		
O-1136	LEVER: steel, nickel pl; approx 2" lg x 1-21/32" h x 0.065" thk o/a; mts by two tapped holes; body hole at ctr, 1/32" diam tip one end	Operates tape feed out mechanism	N17-T-350003-459	CTT	95471	95471	O-1136	7	0	0		
O-1137	SPACER: steel, nickel pl; approx 1/8" lg x 7/16" OD x 5/16" ID; mts by ID	Provides proper clearance between O-1136 and N-800 or N-801	N17-T-350003-460	CTT	95472	95472	O-1137	7	0	0		
O-1138	CRANK, bell: steel, copper pl; irregular "L" shape; approx 13/32" lg x 13/32" h x 0.065" thk o/a; mts by corner body hole	Transfers motion of O-1136 or O-1156 to O-1147 when reperforator operates at 60 or 75 wpm	N17-T-350009-895 1730-041036780	CTT	90774	90774	O-1138	7	0	0		
O-1139	CRANK, bell: steel, nickel pl; irregular "L" shape; approx 15/32" lg x 13/32" h x 0.065" thk o/a; mts by body hole in corner of "L"	Transfers motion of O-1136 or O-1156 to O-1148 when the reperforator operates at 100 wpm	N17-T-350001-447	CTT	6850	6850	O-1139	7	0	0		
O-1140	PLATE, stop: steel, nickel pl; approx triangular shape; approx 1-27/32" lg x 1-7/16" wd x 15/32" thk o/a; mts by three tapped holes, three csk holes and one ctb hole; spring post and latch post riveted on	Supports manual tape feed out mechanism	N17-T-350007-587	CTT	71976	71976	O-1140	7	0	0		
O-1141	BEARING, sleeve: steel, nickel pl; approx 7/16" OD x 9/64" ID x 3/16" lg o/a, shoulder 9/64" lg x 5/16" diam	Provides proper clearance between O-1140 and O-1143	N17-T-350006-243	CTT	7607	7607	O-1141	7	0	0		
O-1142	Same as O-1095	Applies tension to O-1143										
O-1143	PAWL: steel; "T" formed w/arm one side; approx 3/4" lg x 3/4" h x 13/32" wd o/a; mts by two holes in line; csk hole in base of arm	Stops and releases O-1031 by O-1147 for 60 or 75 wpm or O-1148 for 100 wpm	N17-T-350001-454 1730-481578000	CTT	6909	6909	O-1143	7	1	6		
O-1144	COLLAR, locking: steel, nickel pl; approx 1/4" lg x 1/2" OD x 5/16" ID; two tapped mtg holes; one side flat	Locates O-1136 on post of A-830	N17-T-350010-611	CTT	95473	95473	O-1144	7	0	0		
O-1145	SPRING: helical compression type; 0.012" diam music wire; approx 7/32" lg x 5/32" diam o/a; approx seven turns; squared ends; mts by ID	Applies pressure to O-1147	N17-T-350016-173	CTT	7602	7602	O-1145	7	1	6		
O-1146	SPRING: helical compression type; 0.014" diam music wire; approx 7/32" lg x 5/32" OD o/a; approx six turns; straight ends	Applies pressure to O-1148	N17-T-350004-603	CTT	110872	110872	O-1146	7	0	0		

TABLE 8-4. COMBINED PARTS AND SPARE PARTS LIST

PARTS										EQUIPMENT SPARE PARTS	
SYMBOL DESIG.	NAME OF PART AND DESCRIPTION	FUNCTION	JAN OR NAVY TYPE DESIG.	SIGNAL CORPS STANDARD NAVY, AIR FORCE STOCK NO.	MANUFACTURERS CODE	MANUFACTURERS DESIG.	TELETYPE PART NO.	ALL SYMBOL DESIGNATIONS INVOLVED	TOTAL NO. PER EQUIP.	BOX	QUAN
O-1147	LATCH, lever: steel, copper pl; rectangular cutout one end, irregular shape latch cutout other end; approx 15/16" lg x 3/16" wd x 1/8" thk o/a; mts by body hole	Stops or releases O-1143 by O-1136 or O-1156 when the reperforator operates at 60 or 75 wpm		N17-T-350009-792 1730-485103820	CTT	90088	90088	O-1147	7	0	0
O-1148	LATCH, fastener: steel, blk oxide finish; rectangular cut-out one end, latching cutout other end; approx 61/64" lg x 3/16" wd x 1/8" thk o/a; mts by body hole	Stops or releases O-1143 by O-1136 or O-1156 when the re-perforator operates at 100 wpm		N17-T-350004-602	CTT	110871	110871	O-1148	7	0	0
O-1149	PLUNGER, trip: drill rod; approx 15/32" lg x 3/32" diam o/a; mts by 5/64" diam body; rounded head and neck one end	Transfers motion of O-1156 to O-1138 or O-1139		N17-T-350001-483	CTT	7007	7007	O-1149	7	0	0
O-1150	LINK: steel, nickel pl; one end curved and rounded, other end wd w/2 ears; approx 2-1/2" lg x 5/8" wd x 0.095" thk o/a; mts by two #6-40 thd holes; body hole in wd end	Provides means for adjusting position of A-833		N17-T-350010-787	CTT	97292	97292	O-1150	7	0	0
O-1151	WEDGE, clamp: steel; rounded one end w/rounded post extru-sion, wing shaped extrusion other end; approx 43/64" lg x 7/32" wd x 3/16" h o/a; mts by elongated hole in ctr	Contacts O-1120 to lock O-1152 in the spacing or marking position limits travel of O-1152 by O-1132		N17-T-350004-941	CTT	90518	90518	O-1151	7	1	6
O-1152	ARM: selector; steel, nickel pl; two formed arms in line and slot one end; approx 1-29/32" lg x 7/8" wd x 27/32" h o/a; mts by two tapered holes in line; body hole, elongated hole and csk hole in narrow p/o body	Positions selector swords in marking or spacing position by O-1156 and O-1120		N17-T-350004-940	CTT	90516	90516	O-1152	7	0	0
O-1153	SPRING: helical extension type; 0.014" diam music wire; approx 7/16" lg x 5/32" OD x 1/8" ID o/a; 12 turns; parallel hook term ea end; mts by terms	Applies tension to O-1152 when the re-perforator operates at 60 or 75 wpm		N17-T-350006-634	CTT	90517	90517	O-1153	7	1	6
O-1154	SPRING: helical extension type; 0.014" diam music wire; approx 5/32" OD x 13/32" lg o/a; approx 11 turns; parallel hook terminal	Applies tension to O-1152 when the re-perforator operates at 100 wpm		4T114107 N17-T-350016-431	CTT	114107	114107	O-1154	7	0	0
O-1155	WICK: lubricating wick; hard white felt w/o spring; approx 9/32" lg x 3/32" diam o/a	Retains oil for O-1154		N17-T-350003-326	CTT	93729	93729	O-1155	7	0	0

O-1156	LEVER: armature; steel, nickel pl; irregular shape, armature riveted to "U" formed end, formed arm w/wing other end; approx 1-23/32" lg x 1-9/16" h x 1-1/2" wd o/a; mts by two csk holes in line; two csk and two #4-40 tapped holes	Rides O-1031 to operate O-1149. Holds O-1152 in the spacing or marking position by L-800	N17-T-350004-942	CTT	90520	90520	0-1156	7	1	6				
O-1157	RETAINER, spring: nickel silver; "Y" shape, three ends formed; approx 1-7/8" h x 25/32" wd x 1/4" thk o/a; mts by formed ends	Secures L-800 to O-1158	N17-T-350006-627 1730-04331028	CTT	90024	90024	0-1157	7	0	0				
O-1158	CORE, coil: permalloy metal and steel, chromium and light grey enamel; mts by two elongated holes; approx 1-15/16" lg x 31/32" wd x 3/8" thk	Holds O-1156 by L-800	N17-T-350010-262 1730-040890014	CTT	92273	92273	0-1158	7	0	0				
O-1159	ROLLER, lock loop: steel; approx 1/8" lg x 9/32" OD x 3/16" ID o/a; mts by ID	Rides O-1165 to prevent O-1168 from being turned backward	N17-T-350006-169	CTT	7378	7378	0-1159	4	1	6				
O-1160	LEVER: detent; steel, nickel pl; both ends rounded; approx 1-1/4" lg x 3/8" wd x 0.090" thk o/a; mts by large body hole; #6-40 thd hole one end csk hole near ctr	Supports O-1159 and O-1161	4T205670 N17-T-350016-508 1730-04235078	CTT	205670WU	205670WU	0-1160	4	0	0				
O-1161	SPRING: helical extension type; 0.025" diam music wire; approx 7/32" OD x 13/16" lg o/a; approx 17 turns; parallel hook terminal	Applies tension to O-1160	4T207227 N17-T-350016-479 1730-043952404	CTT	207227WU	207227WU	0-1161	4	0	0				
O-1162	GEAR: spur; steel; helical teeth; FH; 15 teeth; 22 pitch, 0.854" PD; approx 15/16" bore, 3/4" thk o/a; straight face; hub 3/8" lg x 13/16" OD w/clutch teeth on end, csk radial hole; mts by ID	Meshes with O-1013 and drives O-1163	N17-T-350016-760	CTT	209816WU	209816WU	0-1162	4	0	0				
O-1163	HUB: clutch; steel; approx 21/32" lg x 15/16" OD x 7/16" ID o/a; mts by ID; clutch teeth and face cam on one end; four drive slots on opposite end	Engages O-1162 to drive automatic tape feed out mechanism	4T12080 N17-T-350016-578 1730-040855006	CTT	12080WU	12080WU	0-1163	4	0	0				
O-1164	SPRING: helical compression type; 0.051" diam music wire; approx 25/32" OD x 3/4" lg o/a; approx 5-1/2 turns; ends ground flat	Applies pressure to O-1163 to hold clutch teeth in engaged position	4T12079 N17-T-350016-434 1730-043952500	CTT	12079WU	12079WU	0-1164	4	0	0				
O-1165	CAM: detent; steel; approx 1-11/32" lg x 1-5/8" wd x 15/16" thk o/a; mts by ID; four drive slots on one end, ctb radial hole in the other end	Supports O-1163 and prevents O-1168 from turning backward by O-1159 and O-1160	N17-T-350016-751 1730-040725153	CTT	205662WU	205662WU	0-1165	4	0	0				

TABLE 8-4. COMBINED PARTS AND SPARE PARTS LIST

PARTS									EQUIPMENT SPARE PARTS	
SYMBOL DESIG.	NAME OF PART AND DESCRIPTION	FUNCTION	JAN OR NAVY TYPE DESIG.	SIGNAL CORPS STANDARD NAVY, AIR FORCE STOCK NO.	MANUFACTURERS CODE	MANUFACTURERS DESIG.	TELETYPE PART NO.	ALL SYMBOL DESIGNATIONS INVOLVED	TOTAL NO. PER EQUIP.	BOX	QUAN
O-1166	CAM: steel, nickel pl; approx 1-1/16" h x 31/32" wd x 13/32" lg o/a; mts by 5/16" ID in hub; ctb radial hole in 5/8" diam x 5/16" lg hub	Operates O-1075 by O-1073		4T205663 N17-T-350016-469 1730-040723131	CTT	205663WU	205663WU	O-1166	4	0	0
O-1167	GEAR: spur; steel, nickel pl; helical teeth; RH; 40 teeth; 48 pitch, 0.833" PD; approx 7/8" OD, 3/16" ID, 11/32" h o/a; straight face; hub 1/16" lg x 5/16" OD; drive dog on hub; no markings	Meshes with O-1169 to drive O-1170		N17-T-350016-338	CTT	205870WU	205870WU	O-1167	4	0	0
O-1168	SHAFT: steel, 4-1/2" lg x 5/16" diam o/a; mts by 7/8" lg shank threaded 11/32" lg w/#10-32 thd; two radial #6-40 thd holes	Supports automatic tape feed out drive mechanism			CTT	129996	129996	O-1168	4	0	0
O-1169	WORM, gear: steel, nickel pl; approx 9/16" lg x 3/16" ID x 3/8" OD o/a; mts by ID	Drives O-1167		4T76247 N17-T-350016-427	CTT	76247	76247	O-1169	4	0	0
O-1170	WORM, gear: steel, nickel pl; approx 3/4" lg x 3/8" diam x 3/16" OD o/a; mts by ID; slot 1/16" wd x 1/16" d one end	Operates O-1174 by H-1200		4T205871 N17-T-350016-480 1730-041560009	CTT	205871WU	205871WU	O-1170	4	0	0
O-1171	SPRING: helical extension type; 0.014" diam music wire; approx 5/32" OD x 13/16" lg o/a; approx 36 turns; parallel hook terminal	Applies tension to E-801		4T20266 N17-T-350016-435	CTT	20266WU	20266WU	O-1171	4	1	6
O-1172	YOKE: iron, nickel pl; "L" shape; approx 1-7/32" lg x 1-5/32" wd x 1/2" h o/a; one mtg hole #4-40 thd; one body hole, extruded two places	Supports A-835 and L-801		4T129248 N17-T-350016-383	CTT	129248	129248	O-1172	4	0	0
O-1173	WASHER, flat: steel, nickel pl; round, approx 1/8" ID x 3/8" OD x 0.035" thk o/a	Provides clearance between E-801 and O-1174		N17-T-350016-708	CTT	129234	129234	O-1173	4	0	0
O-1174	ARM: steel, nickel pl; "U" formed one end, pin riveted near ctr, formed ear other end; approx 2-1/4" lg x 9/32" wd x 15/32" h o/a; mts by two holes in line; body hole above formed ear	Meters tape by contacting S-801		4T129245 N17-T-350016-472	CTT	129245	129245	O-1174	4	0	0
O-1175	SPRING: helical extension type; 0.010" diam music wire; 13/16" lg x 5/32" diam o/a; approx 52 turns; RH turns; parallel hook ends	Applies tension to O-1174		N17-T-350006-314 1730-043952536	CTT	3608	3608	O-1175	4	1	6

O-1176	Same as O-964	Provides means of adjusting position of H-1217 in A-834									
O-1177	SPRING: helical extension type; 0.016" diam music wire; approx 29/32" lg x 5/32" diam o/a; 39 turns; 90° hook turns one vertical other horizontal; mts by terminals	Applies tension to O-1179 by H-1218	N17-T-350006-604 1730-043952614	CTT	87401	87401	0-1177	4	1	6	
O-1178	Same as O-1051	Provides means for adjusting height of L-803									
O-1179	BAIL: armature; steel, nickel pl; irregular shape, formed mtg ears, body formed; approx 2-3/16" lg x 1-25/32" wd x 19/32" h o/a; mts by two holes in line; four body holes	Supports E-804, H-1216 and operates S-800 by L-802 and L-803	4T129249 N17-T-350016-384	CTT	129249	129249	0-1179	4	0	0	
O-1180	Same as O-1051	Provides means for adjusting height of L-802									
O-1181	STRIPPER, pull bar: steel, nickel pl; half circle shape; approx 5-3/4" lg x 1-5/8" h, 3/32" thk material; mts by two tapped holes; one edge irregular, other edge beveled	Disengages pull bars from type bars	N17-T-350001-437	CTT	6690	6690	0-1181	7	0	0	
O-1183	Same as O-431	Applies tension to O-812									
O-1184	BAR, pull: steel, nickel pl; irregular shape, narrow end rounded, six notches near other end; approx 4-21/64" lg x 25/32" h x 0.045" thk o/a; mts by body; one body hole	Operates type bars O-881 through O-908	N17-T-350001-731	CTT	74185	74185	0-1184	196	0	0	
O-1185	Same as O-431	Applies tension to pull bars									
O-1186	GEAR: worm; natural color bakelite; helical teeth; RH; 35 teeth; 22 pitch, 1.664" PD; 1.847" OD, 0.501" bore, 1/2" thk; cutout face; mts by three equidistant ctb holes in cutout; stamped "73106" in back	Used on TT-162/FGC-38X or TT-165/FGC-38X when operating 60 wpm	N17-T-350006-417 1730-041525332	CTT	73106	73106	0-1186	7	0	0	
O-1187	GEAR: worm; natural color bakelite; helical teeth; RH; 32 teeth; 20 pitch, 1.774" PD; 1.929" OD, 0.501" bore, 1/2" thk; concave face; mts by three equidistant ctb holes in cutout; stamped "6991" in back	Used on TT-162/FGC-38X or TT-165/FGC-38X when operating 75 wpm	N17-T-350006-379 1730-041524937	CTT	6991	6991	0-1187	7	0	0	

TABLE 8-4. COMBINED PARTS AND SPARE PARTS LIST

PARTS										EQUIPMENT SPARE PARTS	
SYMBOL DESIG.	NAME OF PART AND DESCRIPTION	FUNCTION	JAN OR NAVY TYPE DESIG.	SIGNAL CORPS STANDARD NAVY, AIR FORCE STOCK NO.	MANUFACTURERS CODE	MANUFACTURERS DESIG.	TELETYPE PART NO.	ALL SYMBOL DESIGNATIONS INVOLVED	TOTAL NO. PER EQUIP.	BOX	QUAN
0-1188	GEAR: spur type; bakelite natural color, fine canvas base; motor pinion drive; helical teeth; RH; 43 teeth; 28 pitch, 1.8262" PD; 1.8976" OD, 0.501" bore, 1/2" wd; face cutout; mts by three equi-distant ctb holes in cutout; stamped "110882"	Used on TT-162/FGC-38X or TT-165/FGC-38X when operating 100 wpm		N17-T-350015-127 1730-041525316	CTT	110882	110882	0-1188	7	0	0
0-1189	SPRING: helical extension type; 0.014" diam music wire; approx 1-1/8" lg x 5/32" diam o/a; approx 58 turns; parallel hook terms; mts by terms	Applies tension to 0-1045		N17-T-350013-909	CTT	125250	125250	0-1189	7	1	12
0-1190	SPRING: helical extension type; 0.045" diam music wire; approx 11/32" OD x 1-1/4" lg o/a; approx 15 turns; hook terminal, indexed 90°	Applies tension to 0-1075		N17-T-350010-627	CTT	95496	95496	0-1190	7	0	0
0-1191	SPACER: steel, nickel pl; approx 3/32" lg o/a x 5/16" OD x 1/8" ID, body 3/16" diam; mts by ID; shoulder on one end 1/16" lg	Provides clearance between H-1062 and 0-1084		N17-T-350010-587	CTT	95426	95426	0-1191,0-1192 0-1193,0-1194 0-1195,0-1196	42	1	6
0-1192	Same as 0-1191	Provides clearance between 0-1084 and 0-1085									
0-1193	Same as 0-1191	Provides clearance between 0-1085 and 0-1194									
0-1194	Same as 0-1191	Provides clearance between 0-1193 and 0-1086									
0-1195	Same as 0-1191	Provides clearance between 0-1086 and 0-1087									
0-1196	Same as 0-1191	Provides clearance between 0-1087 and 0-1088									
0-1197	Same as 0-1089	Operates the punch to perforate the No 2 code hole in the tape									
0-1198	Same as 0-1089	Operates the punch to perforate the No 3 code hole in the tape									

O-1199	Same as O-1089	Operates the punch to perforate No 4 code hole in the tape									
O-1200	Same as O-1089	Operates the punch to perforate the No 5 code hole in the tape									
O-1201	Same as O-1096	Supports O-1098 and separates O-1097 from O-1089									
O-1202	Same as O-917	Provides pivot for O-1099									
O-1203	Same as O-1096	Supports O-1202 and separates O-1099 from O-1100									
O-1204	Same as O-917	Provides pivot for O-1100									
O-1205	Same as O-1096	Supports O-1204 and separates O-1100 from O-1101									
O-1206	Same as O-917	Provides pivot for O-1101									
O-1207	Same as O-1096	Provides support for O-1206 and separates O-1101 from O-1102									
O-1208	Same as O-917	Provides pivot for O-1102									
O-1209	Same as O-1096	Provides support for O-1208 and separates O-1102 from O-1103									
O-1210	Same as O-1115	Separates O-1109 and O-1110									
O-1211	Same as O-1115	Separates O-1110 and O-1111									
O-1212	Same as O-1115	Separates O-1111 and O-1112									
O-1213	Same as O-1115	Separates O-1112 and O-1113									
O-1214	Same as O-1115	Separates O-1113 and H-1096									
O-1217	GEAR: spur; steel; motor pinion; helical teeth; RH; seven teeth; 19 pitch, 1.068" PD; 1.173" OD, 0.376" bore, 3/4" thk; straight face; 3/4" lg x 11/16" diam hub; mts by cyb hole in hub; stamped "78510" in face	Used on TT-161/FGC-38, TT-164/FGC-38 or TT-166/FGC-39 when operating 60 wpm		N17-T-350002-125 1730-041525296	CTT	78510	78510	0-1217	7	0	0

TABLE 8-4. COMBINED PARTS AND SPARE PARTS LIST

PARTS

SYMBOL DESIG.	NAME OF PART AND DESCRIPTION	FUNCTION	JAN OR NAVY TYPE DESIG.	SIGNAL CORPS STANDARD NAVY, AIR FORCE STOCK NO.	MANUFACTURERS		TELETYPE PART NO.	ALL SYMBOL DESIGNATIONS INVOLVED	TOTAL NO. PER EQUIP.	EQUIPMENT SPARE PARTS	
					CODE	DESIG.				BOX	QUAN
O-1218	GEAR: spur; steel; motor pinion; helical teeth; RH seven teeth; 16 pitch, 1.1204" PD; 1.214" OD, 0.376" bore, 3/4" thk; straight face; 3/4" lg x 11/16" diam hub; mts by radial ctb hole in hub; stamped "94267" in face	Used on TT-161/FGC-38, TT-163/FGC-39, TT-164/FGC-38 or TT-166/FGC-39 when operating 75 wpm		N17-T-350003-352 1730-041524943	CTT	94267	94267	O-1218	7	0	0
O-1219	GEAR: spur; steel; helical teeth; RH; 16 teeth; 30 pitch, 1.1809" PD; 1.2475" OD, 0.376" bore, 3/4" thk; straight face; 3/4" lg x 11/16" diam hub; mts by radial ctb hole in hub; stamped "110876" in face	Used on TT-161/FGC-38, TT-163/FGC-39, TT-164/FGC-38 or TT-166/FGC-39 when operating 100 wpm		N17-T-350004-607	CTT	110876	110876	O-1219	7	0	0
O-1220	GEAR: spur; steel; motor pinion; helical teeth; RH; seven teeth; 22 pitch, 1.086" PD; 1.177" OD, 0.376" bore, 3/4" thk; straight face; 3/4" lg x 11/16" diam hub; mts by radial ctb hole in hub; stamped "71974" in face	Used on TT-162/FGC-38X or TT-165/FGC-38X when operating 60 wpm		N17-T-350007-586	CTT	71974	71974	O-1220	7	0	0
O-1221	GEAR: spur; steel; motor pinion; helical teeth; RH; eight teeth; 20 pitch, 1.006" PD; 1.106" OD, 0.376" bore, 3/4" thk; straight face; 3/4" lg x 11/16" diam hub; mts by radial ctb hole in hub; stamped "7082" in face	Used on TT-162/FGC-38X or TT-165/FGC-38X when operating 75 wpm		N17-T-350001-508 1730-041560003	CTT	7082	7082	O-1221	7	0	0
O-1222	GEAR: spur; steel; motor pinion; helical teeth; RH; 14 teeth; 28 pitch, 0.9238" PD; 0.9952" OD, 0.376" bore, 3/4" thk; straight face; 3/4" lg x 11/16" diam hub; mts by ctb hole in hub; stamped "110881" in face	Used on TT-162/FGC-38X or TT-165/FGC-38X when operating 100 wpm		N17-T-350012-270	CTT	110881	110881	O-1222	7	0	0
O-1223	Same as O-928	Provides means for adjusting height of H-1267									
O-1224	SHIM: steel; approx 1/2" diam x 0.254" ID x 0.010" thk; mts by ID	Provides means for adjusting height of H-1268		N17-T-350013-194 1730-043837256	CTT	71156	71156	O-1224,O-1226	364	1	90
O-1225	Same as O-928	Provides means for adjusting height of H-1276									

O-1226	Same as O-1224	Provides means for adjusting height of H-1277
O-1227	Same as O-917	Provides pivot for O-919
O-1228	Same as O-917	Provides pivot for O-920
O-1229	Same as O-917	Provides pivot for O-921
O-1230	Same as O-917	Provides pivot for O-922
O-1231	Same as O-1128	Operates O-1241.
O-1232	Same as O-1127	Operates O-1245
O-1233	Same as O-1128	Operates O-1249
O-1234	Same as O-1126	Separates O-1128, O-1130 and O-1131 from O-1127, O-1237 and O-1238
O-1235	Same as O-714	Spacer between O-1234 and O-1236
O-1236	Same as O-1126	Separates O-1127, O-1237 and O-1238 from O-1231, O-1240 and O-1241
O-1237	Same as O-1131	Operates O-919
O-1238	Same as O-1130	Operates O-1237
O-1239	Same as O-1126	Separates O-1231, O-1240 and O-1241 from O-1232, O-1244 and O-1245
O-1240	Same as O-1131	Operates O-920
O-1241	Same as O-1130	Operates O-1240
O-1242	Same as O-714	Separates O-1236 and O-1239
O-1243	Same as O-1126	Separates O-1232, O-1244 and O-1245 from O-1233, O-1248 and O-1249
O-1244	Same as O-1131	Operates O-921
O-1245	Same as O-1130	Operates O-1244
O-1246	Same as O-714	Separates O-1239 and O-1243
O-1247	Same as O-1126	Provides seat for O-1248, O-1249 and O-1250
O-1248	Same as O-1131	Operates O-922

TABLE 8-4. COMBINED PARTS AND SPARE PARTS LIST

PARTS										EQUIPMENT SPARE PARTS	
SYMBOL DESIG.	NAME OF PART AND DESCRIPTION	FUNCTION	JAN OR NAVY TYPE DESIG.	SIGNAL CORPS STANDARD NAVY, AIR FORCE STOCK NO.	MANUFACTURERS CODE	MANUFACTURERS DESIG.	TELETYPE PART NO.	ALL SYMBOL DESIGNATIONS INVOLVED	TOTAL NO. PER EQUIP.	BOX	QUAN
0-1249	Same as 0-1130	Operates 0-1248									
0-1250	Same as 0-714	Separates 0-1243 and 0-1247									
0-1251	Same as 0-714	Separates 0-1125 and 0-1126									
0-1252	BLOCK ASSEMBLY, punch: straight feed hole - five unit; c/o CTT #95458 punch holder, #110901 retractor plate, #125262 spring, #89500 feed punch, #125493 code punch, #125633 guide plate, #95452 guide and die plates assembly, #95455 and #95454 strippers; approx 1-9/16" lg x 3/4" wd x 1-3/16" h o/a; mts by body; "TELETYPE" imprinted on guide and die plates assembly	Mechanism for perforating tape		N17-T-350004-643 1730-043296003	CTT	111023	111023	0-1252	7	0	0
0-1253	BAIL ASSEMBLY: pull bar; c/o Teletype part/dwg #112573 upper bail, #112574 lower bail, two #3438 washers, two #3606 nuts, and two #112575 screws; steel, nickel pl; semi cir shape; approx 6-3/4" lg x 3-9/16" wd x 13/32" h o/a; two threaded mtg studs; upper and lower bail bolted together, two tapped holes, one reamed body hole, one csk body hole	Operates pull bars when operating 100 wpm		4T114062 N17-T-350016-272	CTT	114062	114062	0-1253	7	0	0
0-1254	BAIL: steel, nickel pl; semi cir shape, wing on outside, inside edge beveled; approx 6-3/4" lg x 3-1/2" wd x 1/4" thk o/a; mts by shank threaded 7/32" lg w/#10-32 thd on ea end; two #6-40 tapped holes, two body holes and one csk hole w/pin press fitted at edge	Operates pull bars when operating at 60 or 75 wpm		N17-T-350004-139	CTT	102230	102230	0-1254	7	0	0
0-1256	Same as 0-714	Provides clearance between 0-923 and 0-1181									
0-1300	LEVER: extension; steel, nickel pl; "L" shape; approx 1-1/4" lg x 11/16" wd x 1/4" thk o/a; mts by two elongated holes in body; one end rounded	Prevents 0-1301 from operating except when the letters code combination is sensed		N17-T-350004-597	CTT	110841	110841	0-1300	3	0	0

O-1301	LEVER: to act upon sensing "letters" perforation; lever mtd on bushing; steel, nickel pl; approx 2-1/8" lg x 1-23/64" wd x 51/64" thk o/a; mts on 3/16" shaft	Operates O-1302 when the letters code combination is sensed	N17-T-350004-598	CTT	110842	110842	O-1301	3	0	0
O-1302	ARM: release arm; steel, nickel pl; approx 2-13/64" lg x 27/32" wd x 5/16" thk o/a; mts on 5/16" shaft	Opens the tape-out contact when the letters code combination is sensed	N17-T-350003-592	CTT	97931	97931	O-1302	3	0	0
O-1303	SPRING: flat type; tape lid spring; steel, bright zinc and chromate; overall dimensions 1-57/64" lg x 1/4" wd x 1/8" thk; two oval holes 17/64" lg, 9/64" wd located near end and 3/64" apart	Holds O-1380 in place	N17-T-350012-266	CTT	110777	110777	O-1303	9	0	0
O-1304	LATCH, lever: steel, nickel pl; "L" shape, latch cutout one end, other end offset tapered, offset ear w/oak hole at corner of "L", approx 1-13/16" lg x 2-3/32" h x 7/64" thk o/a; mts by corner body hole	Holds or releases O-1347	N17-T-350003-539	CTT	97545	97545	O-1304	9	0	0
O-1305	SPRING: helical extension type; 0.016" diam music wire; 5/32" OD x 1-3/32" lg o/a; approx 49 turns; hook terminal, indexed 90°	Applies tension to O-1304	N17-T-350006-550	CTT	82725	82725	O-1305	9	1	9
O-1306	SPRING: helical extension type; 0.014" diam music wire; approx 1-1/8" lg x 5/32" OD x 1/8" ID o/a; approx 60 turns; hook terminal es end indexed 90°; mts by terminals	Applies tension to O-1307	N17-T-350012-714 1730-043952413	CTT	55090	55090	O-1306, O-1371 O-1550	21	1	18
O-1307	BAR, locking: steel, nickel pl; overall dimensions 3-1/16" lg x 3/8" wd x 7/16" h; mtd by elongated slot	Provides means for manually starting or stopping the transmitter	N17-T-350003-542	CTT	97549	97549	O-1307	9	0	0
O-1308	Same as O-1046	Provides means for adjusting the height of A-1318								
O-1309	Same as O-912	Applies tension to O-1302								
O-1310	STIFFENER, contact spring: steel, nickel pl; narrow end rounded, cutout one edge; approx 1-13/32" lg x 15/32" wd x 0.042" thk o/a; mts by two body holes	Applies tension to E-1305	N17-T-350002-602	CTT	84892	84892	O-1310	9	0	0
O-1311	CAM ASSEMBLY: steel, nickel pl; 60-75 wpm; approx 2-25/32" lg x 27/32" diam o/a; mts by ID; sleeve stamped "129296" lubricating wicks between cams	Operate contact levers on TT-167/FGC-38 or TT-169/FGC-38 when operating 60 or 75 wpm	4T129296 N17-T-350016-465 1730-040725133	CTT	129296	129296	O-1311	9	0	0

TABLE 8-4. COMBINED PARTS AND SPARE PARTS LIST

PARTS										EQUIPMENT SPARE PARTS	
SYMBOL DESIG.	NAME OF PART AND DESCRIPTION	FUNCTION	JAN OR NAVY TYPE DESIG.	SIGNAL CORPS STANDARD NAVY, AIR FORCE STOCK NO.	MANUFACTURERS CODE	MANUFACTURERS DESIG.	TELETYPE PART NO.	ALL SYMBOL DESIGNATIONS INVOLVED	TOTAL NO. PER EQUIP.	BOX	QUAN
0-1312	CAM ASSEMBLY: steel, nickel pl; 100 wpm; approx 2-25/32" lg x 27/32" diam o/a; mts by ID; sleeve stamped "129313"; lubricating wicks between cams	Operates contact levers on TT-167/FGC-38 or TT-169/FGC-38 when operating 100 wpm		4T129313 N17-T-350016-468 1730-040725129	CTT	129313	129313	0-1312	9	0	0
0-1313	WICK ASSEMBLY: cam sleeve oiler; white felt w/clamp attached one end; approx 3/4" diam x 9/16" ID x 3/32" thk; c/o CTT #121921 clamp, CTT #120824 washer, felt	Retains oil for 0-1311, 0-1312 or 0-1409		N17-T-350015-638	CTT	120870	120870	0-1313,0-1410	54	0	0
0-1314	SHIM: steel; round; 5/16" ID x 1/2" OD x 0.005" thk	Provides means for adjusting end play of 0-1311, 0-1312 or 0-1409		N17-T-350003-647 1730-043837280	CTT	98361	98361	0-1314	72	1	72
0-1315	SHOE, clutch: steel; irregularly cut out and notched on one edge, other edge straight w/heel at one end, irregularly dished out on both sides; approx 1-5/16" lg x 5/8" wd x 1/16" thk o/a; mts by cutout edge; one body hole csk both sides, secondary shoe	Drives 0-1319 when in engaged position		N17-T-350014-748 1730-043838000	CTT	150043	150043	0-1315	9	0	0
0-1316	LEVER: steel, nickel pl; irregular shape, one end formed, other end "U" formed; approx 1-11/16" lg x 13/16" h o/a; mts by body and "U" formed end; one body hole and one csk hole in projection	Provides means for engaging and disengaging the clutch shoes 0-1315 and 0-1323		4T129292 N17-T-350016-471 1730-042355072	CTT	129292	129292	0-1316	9	1	9
0-1317	SPRING: helical extension type; 0.017" diam music wire; approx 13/16" lg x 1/8" OD o/a; approx 34 turns; hook terms indexed 90°; mts by terms	Applies tension to 0-1316		N17-T-350014-926 1730-043951840	CTT	151728	151728	0-1317	9	1	9
0-1318	WICK: lubrication wick; hard, white felt; approx 5/8" lg x 9/32" wd x 1/32" thk o/a; slit in ctr, elongated arm tapered on end on one side of body	Retains oil for clutch mechanism		N17-T-350013-813 1730-044796550	CTT	150029	150029	0-1318	9	1	9
0-1319	DISK, clutch: steel, nickel pl; irregular "C" shape, formed ear w/cutout on ea side; approx 1-1/4" h x 1-3/16" wd x 1/4" thk o/a; mts by two #4-40 thd holes	Drives 0-1320		4T129290 N17-T-350016-303 1730-041105147	CTT	129290	129290	0-1319	9	0	0

O-1320	DISK, clutch: steel, nickel pl; irregular cir shape, two cutouts, notch and formed ear on circum; approx 1-3/4" diam x 5/16" thk o/a; mts by two body holes; five irregular shaped holes, one large ctr slot, two curved slots and one riveted spring post	Supports clutch shoes and mechanism, also drives O-1321	4T129289 N17-T-350016-300 1730-041105151	CTT	129289	129289	0-1320	9	0	0
O-1321	BEARING, sleeve: super oilite; approx 13/16" lg x 31/32" OD x 5/16" ID o/a; two flats and two slots one side of shoulder, two milled grooves and two end slots on other side of shoulder, two body holes through shoulder	Supports and provides bearing surface for clutch mechanism. Drives O-1311, O-1312 or O-1409	4T129288 N17-T-350016-302 1730-040392518	CTT	129288	129288	0-1321	9	0	0
O-1322	CAM: steel, nickel pl; approx 1-5/16" h x 1-3/16" wd x 0.072" thk o/a; mts by two slots in large ctr hole	Operates O-1331 by O-1329	4T129291 N17-T-350016-470 1730-040723139	CTT	129291	129291	0-1322	9	0	0
O-1323	SHOE, clutch: steel; irregularly cut out on one edge, other edge straight wheel dished out on both sides; approx 1-1/4" lg x 5/8" wd x 1/16" thk o/a; mts by cutout edge; one body hole oak both sides, primary shoe	Permits O-1315 to drive O-1319 when in engaged position	N17-T-350014-749 1730-043838030	CTT	150044	150044	0-1323	9	0	0
O-1324	SPRING: helical extension type; 0.018" diam music wire; approx 9/16" lg x 1/8" OD x 3/32" ID o/a; approx 17 turns; parallel hook terminal ea end	Applies tension to O-1315 and O-1323	N17-T-350014-618 1730-043951760	CTT	150241	150241	0-1324	9	1	9
O-1325	DRUM, clutch: steel, nickel pl; dished out one side w/90 teeth within circum, hub on other side w/slot through lg to body hole on ea side in face of drum, body hole through two flats on hub; approx 1-5/8" OD x 5/16" ID x 1/2" lg o/a; mts by ID	Operates O-1311, O-1312 or O-1409; when O-1315 and O-1323 are in engaged position	N17-T-350013-810 1730-041235100	CTT	150001	150001	0-1325	9	0	0
O-1326	SHAFT: steel; approx 4-13/16" lg x 3/8" diam o/a; double spiral groove approx 3-11/16" one end, opposite end shoulder 23/32" lg w/2 radial holes #6-40 tap	Supports and drives clutch and cam sleeve	N17-T-350016-461	CTT	129297	129297	0-1326	9	0	0
O-1327	GEAR: spur type; steel, nickel pl; helical teeth; LH spiral; 42 teeth; 22 pitch, 2.142" PD; approx 2-1/4" OD x 3/8" ID x 1/8" thk o/a; straight face; mts by ID, two tapped holes; "97563" stamped on face	Meshes with gears in distributor base to drive distributors	N17-T-350006-660	CTT	97563	97563	0-1327	9	0	0

TABLE 8-4. COMBINED PARTS AND SPARE PARTS LIST

PARTS										EQUIPMENT SPARE PARTS	
SYMBOL DESIG.	NAME OF PART AND DESCRIPTION	FUNCTION	JAN OR NAVY TYPE DESIG.	SIGNAL CORPS STANDARD NAVY, AIR FORCE STOCK NO.	MANUFACTURERS CODE	MANUFACTURERS DESIG.	TELETYPE PART NO.	ALL SYMBOL DESIGNATIONS INVOLVED	TOTAL NO. PER EQUIP.	BOX	QUAN
O-1328	HUB: gear mtg; steel, nickel pl; round, w/cut off on circum; approx 1" OD x 3/8" ID x 1/4" thk; mts by ID; two 3/8" ctb holes thru face, one 9/64" hole flat circum	Supports O-1327		N17-T-350016-551	CTT	129661	129661	O-1328	9	0	0
O-1329	ROLLER: steel; no dimension of this item is greater than one inch	Operates O-1331 by O-1322		4T129310 N17-T-350016-261	CTT	129310	129310	O-1329	9	1	9
O-1330	WASHER, felt: hard, white felt; round, 7/32" ID x 3/8" OD x 1/16" thk	Retains oil for O-1329		N17-T-350013-794 1730-044620360	CTT	109757	109757	O-1330	9	1	9
O-1331	LEVER: reset; steel, nickel pl; approx 1-21/32" lg x 7/8" wd x 5/32" h o/a; one mtg hole 9/32" diam; one tapped hole #6-40 thd, one body slot, offset one end	Operates O-1337 by O-1329 and O-1322		4T129308 N17-T-350016-393	CTT	129308	129308	O-1331	9	0	0
O-1332	LEVER: latch; steel, nickel pl; "U" formed one end, other end formed, formed spring ear one side; approx 1-3/4" lg x 13/16" wd x 1/2" d o/a; mts by two holes in line	Locks O-1320 to prevent it from turning backward		4T129306 N17-T-350016-342	CTT	129306	129306	O-1332	9	0	0
O-1333	SPRING: helical compression type; 0.020" diam music wire; approx 5/16" lg x 9/32" OD x 1/4" ID; five turns; closed ends	Applies pressure to O-1332		N17-S-46657-8041 1730-043951660	CTT	109839	109839	O-1333	9	1	9
O-1334	WASHER, felt: hard, white felt; round, approx 1/16" thk x 7/16" OD x 3/16" ID o/a	Retains oil for O-1332		N17-T-350013-676 1730-044620390	CTT	151222	151222	O-1334	18	1	18
O-1335	SPRING: helical extension type; 0.014" diam music wire; approx 27/32" lg x 5/32" OD x 1/8" ID o/a; approx 44 turns; parallel hook terminal ea end; mts by terminals	Applies tension to O-1332		N17-T-350012-708 1730-481887500	CTT	31636	31636	O-1335	9	1	9
O-1336	RING, oil: felt, hard white; approx 7/16" OD x 1/4" ID x 1/8" thk; mts by ID	Retains oil for O-1337		N17-T-350003-322 1730-488430810	CTT	93356	93356	O-1336,O-1373	27	1	36
O-1337	LEVER: trip; steel, nickel pl; approx 1-11/16" lg x 15/16" wd x 7/16" h o/a; mts by body hole and hub ID in line; one csk body hole, one tapped hole	Engages and disengages clutch by O-1316		4T129307 N17-T-350016-394	CTT	129307	129307	O-1337	9	0	0

O-1338	SPRING: helical extension type; 0.018" diam music wire; approx 11/16" lg x 3/16" OD o/a; approx 20 turns; parallel hook terms; mts by terms	Applies tension to O-1337	N17-T-350007-4446 1730-043952416	CTT	60669	60669	O-1338	9	1	9
O-1339	SHAFT: steel, nickel pl; approx 1-21/64" lg x 1/4" diam o/a; mts by #6-40 thd shank, 7/32" lg; shoulder 15/16" lg x 3/16" diam, drive slot in head	Supports and provides pivot for O-1331, O-1332 and O-1337	N17-T-350016-738	CTT	129305	129305	O-1339	9	0	0
O-1340	SHAFT: armature ball; steel, nickel pl; approx 1-21/64" lg x 3/16" diam; mts by #6-40 thd shank, 7/32" lg; one end chamfered and slotted	Supports and provides pivot for O-1341	N17-T-350016-737	CTT	129304	129304	O-1340	9	0	0
O-1341	BAIL: steel, nickel pl; irregular "U" shape; approx 1-1/4" lg x 1-9/32" wd x 1-5/16" h o/a; mts by body hole and ID of hub in line; one csk and two body holes	Operates O-1337 by L-1300 and L-1301	4T129302 N17-T-350016-473	CTT	129302	129302	O-1341	9	0	0
O-1342	WASHER, felt: hard, white felt; round, 3/16" ID, 5/16" OD, 1/16" thk	Retains oil for O-1341	6L504032 N17-T-350016-259	CTT	115221	115221	O-1342,O-1344	18	1	18
O-1343	Same as O-1036	Applies pressure to O-1342 and O-1344								
O-1344	Same as O-1342	Retains oil for O-1341								
O-1345	SPRING: helical extension type; 0.016" diam music wire; approx 7/8" lg x 5/32" diam o/a; 36 turns; parallel hook terminals 90°	Applies tension to O-1341	N17-T-350006-923 1730-043952620	CTT	49084	49084	O-1345	9	1	9
O-1346	LEVER: contact lever; steel, nickel pl; 1-37/64" lg x 1-17/32" wd x 1/16" thk o/a; mts by 3/16" hole in angle of lever	Operates the start-stop contact	N17-T-350001-529 1730-042355818	CTT	7318	7318	O-1346,O-1399 O-1400,O-1401 O-1402,O-1403	54	0	0
O-1347	LEVER: steel, nickel pl; irregularly curved and shaped; one end rounded, other end straight; approx 2-13/16" lg x 1-29/32" h x 0.065" thk o/a; mts by body hole	Operates the tape out contact	N17-T-350003-534	CTT	97537	97537	O-1347	9	0	0
O-1348	SPRING: helical compression type; 0.024" diam music wire; approx 1/2" lg x 1/4" OD o/a; approx 8 turns; straight ends	Applies pressure to O-1347	N17-T-350008-345 1730-043952428	CTT	75606	75606	O-1348	9	1	9
O-1349	Same as O-964	Provides clearance between O-1347 and O-1350								
O-1350	LEVER: steel, nickel pl; approx 1-9/16" lg x 1-5/32" wd x 3/16" d o/a; mts on body hole; csk hole in arms, pin riveted above arm	Operates O-1347	4T123683 N17-T-350016-378 1730-042354004	CTT	123683	123683	O-1350	9	0	0

TABLE 8-4. COMBINED PARTS AND SPARE PARTS LIST

PARTS

SYMBOL DESIG.	NAME OF PART AND DESCRIPTION	FUNCTION	JAN OR NAVY TYPE DESIG.	SIGNAL CORPS STANDARD NAVY, AIR FORCE STOCK NO.	MANUFACTURERS CODE	MANUFACTURERS DESIG.	TELETYPE PART NO.	ALL SYMBOL DESIGNATIONS INVOLVED	TOTAL NO. PER EQUIP.	EQUIPMENT SPARE PARTS BOX	EQUIPMENT SPARE PARTS QUAN
0-1351	SHAFT: contact lever shift; steel; overall dimensions 2-1/8" lg x 3/16" diam; 7/32" lg, #6-40 thd screw stud	Supports and provides pivot for the contact levers		N17-T-350005-947	CTT	97540	97540	0-1351	9	0	0
0-1352	SPRING: helical extension type; 0.024" diam music wire; approx 5/16" OD x 13/16" lg o/a; approx 16 turns; parallel hook terminal	Applies tension to 0-1350		N17-T-350003-662	CTT	98636	98636	0-1352	9	1	9
0-1353	SPRING: helical extension type; 0.024" diam music wire; approx 29/32" lg x 3/16" OD x 5/32" ID o/a; approx 21 turns; hook term ea end indexed 90°; mts by terminals	Applies tension to 0-1379		N17-T-350006-471 1730-483622000	CTT	74962	74962	0-1353	9	1	9
0-1354	PLATE, stiffener: nickel silver; six elongated rectangular fingers and one short rounded finger w/elongated hole on one side; approx 1-9/16" lg x 1-3/8" h x 7/32" wd o/a; mts by two body holes; bent across lg in approx ctr	Supports H-1398 and H-1399 to provide means for adjusting contact points		N17-T-350003-532	CTT	97531	97531	0-1354	9	0	0
0-1355	STIFFENER, contact spring: steel, nickel pl; approx 1-17/32" lg x 1-7/16" wd x 1/16" thk o/a; mts by two body holes; five slots six arms ea w/#2-56 tapped hole, cutout along one edge	Applies pressure to E-1315		N17-T-350004-786	CTT	204370	204370	0-1355	9	0	0
0-1356	ADJUSTER, stiffener: nickel silver; approx 1-3/8" lg x 7/8" wd x 1/4" h o/a; finger 10° bend at ctr; ear w/elongated hole, two 7/32" mtg holes	Supports H-1398 and H-1399 to provide means for adjusting contact points		N17-T-350003-533	CTT	97532	97532	0-1356	9	0	0
0-1357	STIFFENER, contact spring: steel, nickel pl; "L" shape; approx 1-17/32" lg x 7/8" wd x 0.065" thk o/a; mts by two body holes; one tapped hole	Applies tension to E-1318		N17-T-350004-667	CTT	112048	112048	0-1357	9	0	0
0-1358	SPRING: helical extension type; 0.012" diam music wire; approx 15/32" lg x 5/32" OD x 1/8" ID o/a; approx 17 turns; parallel hook terminal ea end; mts by terminals	Applies tension to 0-1359		N17-T-350006-500 1730-483917100	CTT	78533	78533	0-1358,0-1405 0-1406,0-1407 0-1408	45	1	9

O-1359	LEVER: selector lever; "L" shaped lever with pin inserted in front, beveled selecting surface offset 1/4" to left; steel, nickel pl; overall dimensions 1-55/64" lg x 1-19/32" wd x 5/16" thk; mtd by 1/8" diam hole in angle of "L"	Blocks or permits O-1403 to close contact points	N17-T-350003-858	CTT	99263	99263	O-1359	9	O	O
O-1360	LEVER: selector lever; "L" shaped lever with pin inserted in front; beveled selecting surface offset 1/8" to left; steel, nickel pl; overall dimensions 1-55/64" lg x 1-19/32" wd x 13/64" thk; mtd by 1/8" diam hole in angle of "L"	Blocks or permits O-1402 to close contact points	N17-T-350003-857	CTT	99262	99262	O-1360	9	O	O
O-1361	LEVER: selector lever; "L" shaped lever pin inserted in front, beveled selecting surface offset 0.009" to left; steel, nickel pl; overall dimensions 1-55/64" lg x 1-19/32" wd x 5/64" thk; mtd by 1/8" diam hole in angle of "L"	Blocks or permits O-1401 to close contact points	N17-T-350003-856	CTT	99261	99261	O-1361	9	O	O
O-1362	LEVER: selector lever; "L" shaped lever with pin inserted in front, beveled selecting surface offset 0.009" to right; steel, nickel pl; overall dimensions 1-55/64" lg x 1-19/32" wd x 5/64" thk; mtd by 1/8" diam hole in angle of "L"	Blocks or permits O-1400 to close contact points	N17-T-350003-855	CTT	99260	99260	O-1362	9	O	O
O-1363	LEVER: selector lever; "L" shaped lever with pin inserted in front; beveled selecting surface offset 1/8" to right; steel, nickel pl; overall dimensions 1-55/64" lg x 1-19/32" wd x 13/64" thk; mtd by 1/8" diam hole in angle of "L"	Blocks or permits O-1399 to close contact points	N17-T-350003-854	CTT	99259	99259	O-1363	9	O	O
O-1364	LEVER: steel, nickel pl; irregular "L" shape, post on formed end, csk hole near other end; approx 1-23/32" lg x 1-3/4" h x 9/32" wd o/a; mts by body hole in corner "L"	Blocks O-1350 except when out of tape	N17-T-350003-528	CTT	97523	97523	O-1364	9	O	O
O-1365	BUSHING: general purpose bushing; steel; both, male and female; approx 9/64" lg x 3/16" OD x 1/8" ID o/a	Provides pivot for O-1379	N17-T-350003-527	CTT	97516	97516	O-1365, O-1369	18	O	O
O-1366	BAIL, selector lever: steel, copper pl; "U" shape; approx 1-5/8" lg x 49/64" wd x 45/64" thk o/a; two mtg holes 1/8" diam and 3/16" diam located 9/16" from back	Operates O-1359, O-1360, O-1361, O-1362, O-1363 and O-1364	N17-T-350010-859	CTT	97514	97514	O-1366	9	O	O

TABLE 8-4. COMBINED PARTS AND SPARE PARTS LIST

PARTS										EQUIPMENT SPARE PARTS	
SYMBOL DESIG.	NAME OF PART AND DESCRIPTION	FUNCTION	JAN OR NAVY TYPE DESIG.	SIGNAL CORPS STANDARD NAVY, AIR FORCE STOCK NO.	MANUFACTURERS CODE	MANUFACTURERS DESIG.	TELETYPE PART NO.	ALL SYMBOL DESIGNATIONS INVOLVED	TOTAL NO. PER EQUIP.	BOX	QUAN
0-1367	SPRING: helical extension type; 0.010" diam music wire; approx 5/8" lg x 1/8" OD x 3/32" ID o/a; approx 37 turns; hook terminal ea end, indexed 90°; mts by terminals	Applies tension to 0-1364		N17-T-350006-317 1730-480752000	CTT	110437	110437	0-1367,0-1526	10	1	9
0-1368	Same as 0-957	Rides selector cam to operate 0-1375									
0-1369	Same as 0-1365	Provides pivot for 0-1375 and 0-1376									
0-1370	Same as 0-957	Rides selector cam to operate 0-957									
0-1371	Same as 0-1306	Applies tension to 0-1378 when the distributor operates at 60 or 75 wpm									
0-1372	SPRING: helical extension type; 0.016" diam music wire; approx 15/16" lg x 5/32" OD o/a; approx 39 turns; hook terminals, indexed 90°; mts by terms	Applies tension to 0-1378 when the distributor operates at 100 wpm		N17-T-350006-485	CTT	76379	76379	0-1372	9	1	9
0-1373	Same as 0-1336	Retains oil for 0-1370									
0-1374	WASHER, felt: hard, white felt; round, approx 1/2" OD x 3/32" thk x 5/16" ID o/a; ID flatted one side	Retains oil for 0-1368		N17-T-350009-863	CTT	90535	90535	0-1374	9	1	9
0-1375	ARM: feed pawl arm; steel, nickel pl; approx 1-13/32" lg x 1-1/64" wd x 1/16" thk o/a; mts by two holes 3/16" diam	Operates 0-1376		N17-T-350003-530	CTT	97526	97526	0-1375	9	0	0
0-1376	LEVER: feed pawl lever; steel, nickel pl; approx 2-1/4" lg x 1-3/8" wd x 1/16" thk o/a; mtd by 3/16" diam hole	Operates 0-1378		N17-T-350003-529	CTT	97525	97525	0-1376	9	0	0
0-1377	SPRING: helical extension type; feed pawl arm return; music wire; approx 11/16" lg x 13/64" OD o/a; approx 14 turns; hook terminals, indexed 90° part	Applies tension to 0-1375		N17-T-350003-955 1730-043952467	CTT	101385	101385	0-1377	9	1	9
0-1378	PAWL: feed pawl; steel, nickel pl; approx 1-11/32" lg x 5/16" wd x 29/64" thk o/a; mts by two holes 5/32" diam through arms of pawl	Operates 0-1387		N17-T-350010-867 1730-040475078	CTT	97527	97527	0-1378	9	0	0

O-1379	LEVER: selector lever ball extension; steel, nickel pl; approx 2-3/64" lg x 51/64" wd x 1/16" thk o/a; mts 3/16" hole in end	Operates O-1366	N17-T-350010-860	CTT	97515	97515	O-1379	9	0	0
O-1380	PLATE, pressure: holds tape over sending pins; steel, nickel pl; overall dimensions approx 1-27/32" lg x 1" wd x 1/2" h o/a; mtd by bearing holes; ctr drilled to 5/64" diam	Holds tape down on A-1318	N17-T-350012-268	CTT	110780	110780	O-1380	9	0	0
O-1381	CUP, oil: brass; 90° offset angle; approx 3/4" lg x 19/32" h x 1/4" diam o/a; #10-32 thd shank; hinged cap	Provides means for oiling one end of O-1326	N17-T-350002-942	GT	L-1201	89896	O-1381,O-1395	18	0	0
O-1382	WICK: lubricating wick: felt approx 3/16" lg x 3/32" diam o/a	Retains oil for one end of O-1326	N17-T-350012-461 1730-044796588	CTT	89881	89881	O-1382,O-1396	18	1	18
O-1383	WICK: oil wick; felt, w/o spring; approx 1/4" lg x 6/32" diam o/a	Retains oil for one end of O-1326	N17-T-350003-973 1730-044796628	CTT	101591	101591	O-1383,O-1397	18	1	18
O-1384	SHIM: steel; rectangular; approx 13/32" lg x 1/4" wd x 0.004" thk; one 5/32" mtg hole	Provides means for adjusting height of A-1312	4T111464 N17-T-350016-305 1730-043837328	CTT	111464	111464	O-1384,O-1393	252	1	9
O-1385	Same as O-1046	Provides means for adjusting height of A-1318								
O-1386	SHIM: steel; approx 13/16" lg x 13/32" wd x 0.004" thk o/a; two slots on 1/2" ctrs, 1/3" wd, 7/32" d	Provides means for adjusting height of A-1322	N17-T-350004-181 1730-043837260	CTT	102861	102861	O-1386,O-1388	126	0	0
O-1387	ROLLER, feed: steel, nickel pl; pin wheel and ratchet wheel on integral shaft; approx 1-5/64" diam x 1-17/64" lg o/a; mtd on 60° cone shaped bearing depression in ends	Feeds the tape through the distributor	N17-T-350003-547	CTT	97555	97555	O-1387	9	0	0
O-1388	Same as O-1386	Provides means for adjusting height of A-1324								
O-1389	SPRING: helical extension type; 0.020" diam music wire; approx 3/16" OD x 9/16" lg o/a; approx 12 turns; parallel hook terminal	Applies tension to O-1392	4T124137 N17-T-350016-430 1730-043952473	CTT	124137	124137	O-1389	9	1	9
O-1390	BEARING, sleeve: spacer detent roller; steel; female; approx 11/64" lg x 1/8" OD x 5/64" ID o/a	Rides O-1387 to meter tape fed through distributor	N17-T-350001-534 1730-4817861 20	CTT	7679	7679	O-1390	9	1	9
O-1391	SPACER: steel, nickel pl; round; no dimension of this item is greater than one inch; single axial mtg hole 5/32" diam	Provides pivot for O-1392	4T111784 N17-T-350016-258	CTT	111784	111784	O-1391	9	0	0

TABLE 8-4. COMBINED PARTS AND SPARE PARTS LIST

PARTS									EQUIPMENT SPARE PARTS	
SYMBOL DESIG.	NAME OF PART AND DESCRIPTION	FUNCTION	JAN OR NAVY TYPE DESIG.	SIGNAL CORPS STANDARD NAVY, AIR FORCE STOCK NO.	MANUFACTURERS CODE	MANUFACTURERS DESIG.	TELETYPE PART NO.	ALL SYMBOL DESIGNATIONS INVOLVED	TOTAL NO. PER EQUIP.	BOX	QUAN
O-1392	LEVER: detent lever; steel, nickel pl; "T" shape; approx 1-33/64" lg x 1-7/16" wd x 1/16" thk o/a; mtd by 7/32" hole	Meters tape fed through distributor by O-1387 and O-1390		N17-T-350003-549	CTT	97557	97557	O-1392	9	0	0
O-1393	Same as O-1384	Provides means for adjusting height of A-1312									
O-1394	Same as O-1046	Provides means for adjusting height of A-1318									
O-1395	Same as O-1381	Provides means for oiling one end of O-1326									
O-1396	Same as O-1382	Retains oil for one end of O-1326									
O-1397	Same as O-1383	Retains oil for one end of O-1326									
O-1398	SHAFT: shaft for selector levers; steel; approx 2-3/8" lg x 1/8" diam o/a; ends mt in 5/64" hole in retainer	Supports and provides pivot for selector levers		N17-T-350010-858 1730-043836687	CTT	97513	97513	O-1398	9	0	0
O-1399	Same as O-1346	Operates the transmitting contact for the 1st code interval									
O-1400	Same as O-1346	Operates the transmitting contact for the 2nd code interval									
O-1401	Same as O-1346	Operates the transmitting contact for the 3rd code interval									
O-1402	Same as O-1346	Operates the transmitting contact for the 4th code interval									
O-1403	Same as O-1346	Operates the transmitting contact for the 5th code interval									
O-1404	Same as O-964	Provides clearance between O-1403 and A-1310									
O-1405	Same as O-1358	Applies tension to O-1363									
O-1406	Same as O-1358	Applies tension to O-1362									

O-1407	Same as O-1358	Applies tension to O-1361									
O-1408	Same as O-1358	Applies tension to O-1360									
O-1409	CAM SLEEVE ASSEMBLY, seven unit: steel, nickel pl; approx 2-7/8" lg x 53/64" diam x 5/16" ID o/a; mts by ID; stamped "129349"	Operates contact lever on TT-168/FGC-39 or TT-170/FGC-39		N17-T-350016-669 1730-040725149	CTT	129349	129349	0-1409	9	0	0
O-1410	Same as O-1313	Retains oil for O-1311, O-1312 or O-1409. Two are removed when the letters sensing mechanism is used									
O-1411	COLLAR, spacing: steel; approx 5/32" lg x 5/16" OD x 3/16" ID o/a	Provides clearance between O-1346 and O-1350; O-1346 and O-1399; O-1399 and O-1400; O-1400 and O-1401; O-1401 and O-1402; O-1402 and O-1403		N17-T-350005-579	CTT	2526	2526	0-1411	54	0	0
O-1412	BUSHING: to position bracket; steel, nickel pl; female; approx 3/16" lg 1/4" OD; 9/64" ID o/a	Provides clearance between A-1314 and A-1321		N17-T-350003-237	CTT	92685	92685	0-1412,0-1413	27	0	0
O-1413	Same as O-1412	Provides clearance between A-1314 and A-1326									
O-1500	Same as O-928	Provides means for adjusting height of motor on numbering distributor-transmitter base									
O-1501	GEAR: spur type; steel; helical teeth; LH; 14 teeth; 28 pitch, 1.2245" PD; 1-9/32" OD, 3/8" bore, 1-5/8" thk o/a; straight face; hub extends 7/8", 11/16" OD; mts by bore and radial ctb hole; stamped "112687"	Used on MT-1372/FGC-38 for operating 100 wpm		N17-T-350013-781 1730-041524961	CTT	112687	112687	0-1501,0-1701	3	0	0
O-1502	GEAR: spur; steel; helical teeth; LH; 11 teeth; 26 pitch, 1.0766" pitch diam; approx 1-5/32" OD, 3/8" ID, 1-5/8" lg o/a; straight face; hub 7/8" lg x 11/16" OD, one ctb hole in hub; stamped "112689"	Used on MT-1372/FGC-38 for operating 75 wpm		4T112689 N17-T-350016-372 1730-041524955	CTT	112689	112689	0-1502,0-1702	3	0	0
O-1503	GEAR: spur type; steel; helical teeth; LH; 11 teeth; 30 pitch, 0.9408" PD; 1" OD, 3/8" bore, 1-5/8" thk o/a; straight face; hub extends 7/8", 11/16" OD; mts by bore and one radial ctb hole; stamped "112691"	Used on MT-1372/FGC-38 for operating 60 wpm		N17-T-350012-348	CTT	112691	112691	0-1503,0-1703	3	0	0

TABLE 8-4. COMBINED PARTS AND SPARE PARTS LIST

PARTS									EQUIPMENT SPARE PARTS	
SYMBOL DESIG.	NAME OF PART AND DESCRIPTION	FUNCTION	JAN OR NAVY TYPE DESIG.	SIGNAL CORPS STANDARD NAVY, AIR FORCE STOCK NO.	MANUFACTURERS CODE	MANUFACTURERS DESIG.	TELETYPE PART NO.	ALL SYMBOL DESIGNATIONS INVOLVED	TOTAL NO. PER EQUIP.	BOX	QUAN
O-1504	ARM: irregular shape; steel, nickel pl; approx 6-1/2" lg x 2-5/8" wd x 3/8" thk o/a; four 5/32" diam mtg holes; one body, two csk and two oval holes	Supports mechanism for keeping numbering tape tight		4T128266 N17-T-350016-462	CTT	128266	128266	O-1504	3	0	0
O-1505	SPRING: helical extension type; 0.018" diam music wire; approx 1" lg x 5/32" OD x 1/8" ID o/a; approx 36 turns; parallel hook term ea end; mts by terms	Applies tension to O-1506		N17-T-350013-606 1730-043951850	CTT	22015	22015	O-1505	3	0	0
O-1506	ARM: tape tightening; steel, nickel pl; approx 5-5/8" lg x 1-1/4" wd x 1/4" h o/a; single 1/4" mtg hole in hub; one csk body hole, one thd body hole, two washers riveted on	Operates O-1511 and supports H-1544		4T128270 N17-T-350016-380	CTT	128270	128270	O-1506	3	0	0
O-1507	WICK: oil wick; felt, w/o spring; approx 1/16" diam x 9/32" lg o/a	Retains oil for O-1508		4T90436 N17-T-350016-248 1730-044796636	CTT	90436	90436	O-1507	3	0	0
O-1508	BEARING, sleeve: oilite bronze; female; approx 25/32" lg x 3/4" OD x 3/8" ID o/a; head 5/32" lg w/csk radial hole, 9/16"-32 thd, 5/8" lg	Supports and provides bearing surface for O-1504		4T128264 N17-T-350016-478 1730-040392522	CTT	128264	128264	O-1508	3	0	0
O-1509	DISK, ratchet: steel, nickel pl; approx 3" diam x 1/16" thk o/a; mts by three body holes; has 95 teeth and large ctr cutout	Operates O-1514 by O-1511 and O-1504		4T128256 N17-T-350016-309	CTT	128256	128256	O-1509	3	0	0
O-1510	SPRING: helical extension type; 0.018" diam music wire; approx 3/4" lg x 5/32" ID x 1/8" o/a; approx 37 turns; hook term ea end indexed 90°; mts by terms	Applies tension to O-1511		N17-T-350009-541	CTT	86283	86283	O-1510	3	0	0
O-1511	PAWL: steel, nickel pl; "L" shape; approx 1-5/16" lg x 1-3/4" wd x 7/32" h o/a; mts on hole in hub; one csk body hole	Drives O-1509 by O-1504		4T128257 N17-T-350016-379	CTT	128257	128257	O-1511	3	0	0
O-1512	WASHER, flat: felt, hard white, sanded one side; round, 1-5/8" OD x 9/16" ID x 0.070" thk	Provides friction between O-1519 and O-1514		N17-T-350005-799 1730-483760000	CTT	77019	77019	O-1512,O-1515	6	1	12
O-1513	HUB: gear mtg; steel, nickel pl; approx 7/16" thk x 1" diam x 1/2" ID o/a; mts by ID w/2 #6-40 thd holes thru face; one 9/64" radial hole w/1/4" ctb 5/32" d	Supports drive gear for numbering distributor-transmitter bases		N17-T-350016-567	CTT	129673	129673	O-1513,O-1540 O-1542,O-1544 O-1705,O-1709 O-1720,O-1730	11	0	0

O-1514	REEL, tape: aluminum, plain anodize; c/o two disks swaged to core; approx 5-3/4" diam x 7/8" wd o/a; mts by 9/16" ctr hole; three equidistant osk holes in LH disk in line w/3 body holes in RH disk	Rewinds numbering tape	4T128325 N17-T-350016-313	CTT	128325	128325	O-1514	3	0	0
O-1515	Same as O-1512	Provides friction between O-1514 and O-1516								
O-1516	DISK, friction: steel, nickel pl; approx 9/16" ID, 1-5/8" OD, 9/32" thk o/a; mts by body hole; formed ear on circum	Applies tension to O-1515	N17-T-350001-995	CTT	77018	77018	O-1516	3	0	0
O-1518	Same as O-415	Applies tension to O-1516								
O-1519	SLEEVE: steel, nickel pl; round, w/disk on one end; approx 1-27/32" lg x 5/8" diam o/a; mts on 3/8" axial thd on outside of body 9/16-32 thd x 3/8" lg, ctb radial hole in body	Supports O-1514	4T117828 N17-T-350016-374	CTT	117828	117828	O-1519	3	0	0
O-1520	BEARING, sleeve: bronze; male; approx 7/8" OD x 3/8" ID x 1" lg o/a; shoulder on one end 3/8" lg, other end threaded 9/16"-32 thd, tapped hole in shoulder	Supports and provides bearing surface for one end of O-1530	4T85465 N17-T-350016-369	CTT	85465	85465	O-1520, O-1532	2	0	0
O-1521	WHEEL, ratchet: steel, nickel pl; hub w/ctb hole welded to ratchet, 52 teeth; approx 2" diam x 31/32" lg o/a; mts by 3/8" ID of hub; three equidistant projections on ratchet	Drives O-1530 by O-1523 and O-1533	4T117832 N17-T-350016-429	CTT	117832	117832	O-1521	3	0	0
O-1522	PAWL: steel, nickel pl; irregular shape; approx 1-1/4" lg x 17/32" wd x 3/32" thk; mts by body hole at ctr; osk hole in rounded end, other end flat	Operates O-1521 by O-1523	4T117837 N17-T-350016-304	CTT	117837	117837	O-1522, O-1527	4	0	0
O-1523	ARM: has one riveted spring post; steel, nickel pl; approx 5-3/16" lg x 7/8" wd x 5/16" thk o/a; mts by 1/2" body hole round end; one end has slot	Drives O-1521 by O-1522 and O-1533	4T128258 N17-T-350016-466	CTT	128258	128258	O-1523	3	1	2
O-1524	SPRING: helical extension type; 0.012" diam music wire; approx 9/16" lg x 5/32" OD x 1/8" ID o/a; approx 26 turns; parallel hook term ea end; mts by terms	Applies tension to O-1522	N17-T-350006-362 1730-4814200O	CTT	4703	4703	O-1524	3	0	0
O-1525	LATCH, spring: spring steel; approx 1-7/8" lg x 3/8" wd x 5/16" h o/a; two 5/32" mtg holes; one 3/16" hole	Locks O-1504 in operating position	*1	CTT	128333	128333	O-1525	3	0	0
			*1 Low Failure item - if required requisition from ESO referencing NavShips 900,180A							

TABLE 8-4. COMBINED PARTS AND SPARE PARTS LIST

PARTS										EQUIPMENT SPARE PARTS	
SYMBOL DESIG.	NAME OF PART AND DESCRIPTION	FUNCTION	JAN OR NAVY TYPE DESIG.	SIGNAL CORPS STANDARD NAVY, AIR FORCE STOCK NO.	MANUFACTURERS CODE	MANUFACTURERS DESIG.	TELETYPE PART NO.	ALL SYMBOL DESIGNATIONS INVOLVED	TOTAL NO. PER EQUIP.	BOX	QUAN
0-1526	Same as 0-1367	Applies tension to 0-1527									
0-1527	Same as 0-1522	Locks 0-1521 in advanced position									
0-1528	BLOCK, guide: steel, nickel pl; rectangular block; approx 2-1/2" lg x 5/8" wd x 5/8" h o/a; mts by two ctb holes; one csk hole and two #10-32 tapped holes	Secures 0-1534 to A-1501		4T117834 N17-T-350016-395	CTT	117834	117834	0-1528,0-1529	2	0	0
0-1529	Same as 0-1528	Secures 0-1546 to A-1501									
0-1530	SHAFT: steel; approx 16-3/4" lg x 3/8" diam; mtg by body four tapped holes	Supports tight tape reels and mechanism on numbering distributor-transmitter bases		4T128330 N17-T-350016-467	CTT	128330	128330	0-1530	1	0	0
0-1531	Same as 0-1023	Retains oil for 0-1532									
0-1532	Same as 0-1520	Supports and provides bearing surface for one end of 0-1530									
0-1533	HUB: steel, nickel pl; round; shoulder stud drive fitted in face, two #10-32 radial tapped holes; approx 1" OD x 15/32" ID x 11/16" lg o/a, 1/2" lg hub; mts by ID	Operates 0-1523		4T128259 N17-T-350016-464	CTT	128259	128259	0-1533	1	1	2
0-1534	BEARING, sleeve: steel; approx 1-31/32" lg x 13/16" wd x 1" h o/a, incl sleeve w/1/2" ID, three body holes, one tapped hole	Supports and provides bearing surface for one end of 0-1545		N17-T-350010-875	CTT	97568	97568	0-1534,0-1546 0-1706,0-1716	6	0	0
0-1535	SHIM: steel; approx 1-3/8" lg x 1/2" wd x 0.004" thk; mts by two body holes	Provides means for adjusting 0-1545		N17-T-350003-630 1730-043837292	CTT	98198	98198	0-1535,0-1547 0-1707,0-1717	20	1	14
0-1536	GEAR: spur type; bakelite; helical teeth; LH; 39 teeth; 28 pitch, 1.5258" PD; 1-19/32" OD, 1/2" bore, 1/2" thk; straight face; mts by bore and two axial holes; stamped "112686"	Used on base MT-1372/FGC-38 for operating 100 wpm		N17-T-350013-780	CTT	112686	112686	0-1536,0-1711	3	0	0

O-1537	GEAR: spur; bakelite; natural color; helical teeth; LH; 40 teeth; 26 pitch, 1.6728" pitch diam; approx 1-3/4" OD, 1/2" ID, 1/2" thk o/a; straight face; mts by two 5/32" holes; stamped "112688"	Used on base MT-1372/FGC-38 for operating 75 wpm	4T112688 N17-T-350016-371	CTT	112688	112688	O-1537,O-1712	3	0	0
O-1538	GEAR: spur type; bakelite; helical teeth; LH; 50 teeth; 30 pitch, 1.8096" PD; 1-7/8" OD, 1/2" bore, 1/2" thk; straight face; mts by bore and two axial holes; stamped "112690"	Used on base MT-1372/FGC-38 for operating 60 wpm	N17-T-350012-347	CTT	112690	112690	O-1538,O-1713	3	0	0
O-1539	GEAR: spur type; bakelite; helical teeth; RH; 39 teeth; 22 pitch, 1.9895" PD; 2-3/32" OD, 1/2" bore, 3/16" thk; straight face; mts by bore and two axial holes; stamped "97576"	Drives one numbering distributor-transmitter	N17-T-350006-662 1730-041524934	CTT	97576	97576	O-1539,O-1541 O-1543,O-1708 O-1710,O-1714	9	0	0
O-1540	Same as O-1513	Supports O-1539								
O-1541	Same as O-1539	Drives one numbering distributor-transmitter								
O-1542	Same as O-1513	Supports O-1541								
O-1543	Same as O-1539	Drives one numbering distributor-transmitter								
O-1544	Same as O-1513	Supports O-1543								
O-1545	SHAFT: SS; approx 12-13/16" lg x 1/2" diam o/a; mts by body; tapped radial holes four places, 15/32" diam shank one end	Drives numbering distributor-transmitter and mechanism	N17-T-350012-242	CTT	110673	110673	O-1545,O-1715	3	0	0
O-1546	Same as O-1534	Supports and provides bearing surface for one end of O-1545								
O-1547	Same as O-1535	Provides means for adjusting height of O-1535								
O-1548	SHIM: nickel silver; approx 3/8" OD x 5/32" ID x 0.010" thk o/a	Provides clearance between A-1511 and A-1512	N17-T-350001-310 1730-48102T300	CTT	125789	125789	O-1548,O-1719	3	1	6
O-1549	ARM: steel, nickel pl; wrench shape; approx 2-19/32" lg x 7/8" wd x 9/32" h o/a; mts by 3/16" hole in body; tapped hole in small rounded end, wd end has large cutout and formed ear w/csk hole	Supports H-1657	4T124168 N17-T-350016-426	CTT	124168	124168	O-1549	3	0	0
O-1550	Same as O-1306	Applies tension to O-1549								

TABLE 8-4. COMBINED PARTS AND SPARE PARTS LIST

PARTS									EQUIPMENT SPARE PARTS	
SYMBOL DESIG.	NAME OF PART AND DESCRIPTION	FUNCTION	JAN OR NAVY TYPE DESIG.	SIGNAL CORPS STANDARD NAVY, AIR FORCE STOCK NO.	MANUFACTURERS CODE	MANUFACTURERS DESIG.	TELETYPE PART NO.	ALL SYMBOL DESIGNATIONS INVOLVED	TOTAL NO. PER EQUIP.	BOX	QUAN
O-1551	REEL, tape: c/o two disks and one hub, swaged together; aluminum; approx 7/8" wd x 5-3/4" diam o/a; mts on ctr hole through two disks, one csk body hole; one plain body hole, four counterbalance holes	Stores tape on numbering distributor-transmitter bases		4T128261 N17-T-350016-377	CTT	128261	128261	O-1551	3	0	0
O-1552	SHIM: nickel silver; rectangular shape; 4-7/8" lg x 5/8" wd x 0.010" thk o/a; mts by three elongated slots on 1-31/32" mtg/c in one edge	Provides space between A-1518 and bases		N17-T-350016-741	CTT	129781	129781	O-1552	3	0	0
O-1553	BUSHING: steel, nickel pl; male and female; approx 13/16" lg x 3/8" OD x 5/32" ID o/a; head 1/32" lg, shank 25/32" lg x 7/32" diam	Supports and provides pivot for O-1552		4T128262 N17-T-350016-460	CTT	128262	128262	O-1553	3	0	0
O-1554	WICK, felt: white felt w/o spring; approx 7/8" x 3/16" diam o/a	Retains oil for O-1546		N17-T-350010-846 1730-044796640	CTT	97481	97481	O-1554,O-1718	6	1	12
O-1555	GEAR: spur type; steel; motor pinion; helical teeth; LH; seven teeth; 19 pitch, 1.0676" PD; 1-11/64" diam x 1-5/8" lg x 3/8" ID o/a; straight face; hub 7/8" lg x 3/8" ID x 5/8" diam w/9/64" ctb axial hole; mts by ID; stamped "117323"	Used on MT-1374/FGC-39 for operating 60 wpm with 7.00 unit code		N17-T-350016-671 1730-041524946	CTT	117323	117323	O-1555,O-1722	3	0	0
O-1556	GEAR, pinion: spur type; steel; motor drive; helical; LH; 10 teeth; 30 pitch, 0.813" PD; approx 1-5/8" lg x 7/8" OD x 3/8" ID o/a; straight face; hub 7/8" lg x 9/16" diam x 3/8" ID w/9/64" ctb axial hole; mts by ID; stamped "110650"	Used on MT-1373/FGC-38X for operating 60 wpm		N17-T-350004-580	CTT	110650	110650	O-1556,O-1723	3	0	0
O-1557	GEAR: spur type; steel; motor driving gear; helical; LH; eight teeth; 22 pitch, 1.1150" PD; approx 1-5/8" lg x 1-13/64" diam x 3/8" ID o/a; straight face; hub 7/8" lg x 11/16" OD w/ctb radial hole; mts by ID; stamped "122041"	Used on MT-1373/FGC-38X for operating 75 wpm		N17-T-350016-570 1730-041525300	CTT	122041	122041	O-1557,O-1724	3	0	0
O-1558	GEAR, motor pinion: spur type; steel; helical; LH; 12 teeth; 28 pitch, 1.2703" PD; approx 1-5/8" lg x 1-11/32" diam x 3/4" ID o/a; straight face; hub 7/8" lg x 11/16" diam w/ctb radial hole; mts by ID; stamped "111264"	Used on MT-1373/FGC-38X for operating 100 wpm		N17-T-350016-569 1730-041524940	CTT	111264	111264	O-1558,O-1725	3	0	0

O-1559	GEAR: spur type; fiber; helical teeth; LH; 30 teeth; 19 pitch, 1.6824" PD; approx 1-25/32" diam x 1/2" wd x 1/2" ID o/a; straight face; mts by ID; stamped "117324"	Used on MT-1374/FGC-39 for operating 60 wpm with 7.00 unit code	N17-T-350016-666 1730-941525564	CTT	117324	117324	O-1559,O-1726	3	O O
O-1560	GEAR: spur type; clear phenolic w/canvas base; helical teeth; LH; 53 teeth; 30 pitch, 1.859" PD; approx 1/2" wd x 2" OD x 1/2" ID o/a; straight face; mts by ID; stamped "110651"	Used on MT-1373/FGC-38X for operating 60 wpm	N17-T-350012-238	CTT	110651	110651	O-1560,O-1727	3	O O
O-1561	GEAR: spur type; clear phenolic w/canvas base; helical teeth; LH; 34 teeth; 22 pitch, 1.635" PD; approx 1/2" wd x 1-23/32" OD x 1/2" ID o/a; straight face; mts by ID; stamped "122042"	Used on MT-1373/FGC-38X for operating 75 wpm	N17-T-350016-563	CTT	122042	122042	O-1561,O-1728	3	O O
O-1562	GEAR: spur type; natural color phenolic, w/canvas base; helical teeth; LH; 39 teeth; 28 pitch, 1.479" PD; approx 1/2" wd x 1-9/16" OD x 1/2" ID o/a; straight face; mts by ID; stamped "111265"	Used on MT-1373/FGC-38X for operating 100 wpm	N17-T-350012-283	CTT	111265	111265	O-1562,O-1729	3	O O
O-1563	BUSHING: steel, nickel pl; male; approx 11/64" lg x 7/16" OD x 3/32" ID o/a; shank 7/64" lg x 1/4" diam, shoulder beveled 1/32" on face	Locating bushing for numbering distributor-transmitter on A-1501	N17-T-350016-568	CTT	129547	129547	O-1563,O-1721	9	O O
O-1564	REEL ASSEMBLY, tape rewind: c/o reel assembly, part/dwg #128261; handle, part/dwg #128338; bushing, part/dwg #128262; screw, part/dwg #88802; washer, part/dwg #7002; washer, part/dwg #2191; nut, part/dwg #116167; approx 7/8" wd x 5-3/4" diam o/a; mts on ctr hole through two disks; one csk body hole, one main body hole, four counterbalance holes	Rewinds tape on numbering bases		CTT	128261	128261	O-1564	3	O O
O-1700	Same as O-928	Provides means for adjusting the height of motor on message transmitter bases							
O-1701	Same as O-1501	Used on MT-1369/FGC-38 for operating operation							
O-1702	Same as O-1502	Used on MT-1369/FGC-38 for operating 75 wpm							
O-1703	Same as O-1503	Used on MT-1369/FGC-38 for operating 60 wpm							

TABLE 8-4. COMBINED PARTS AND SPARE PARTS LIST

PARTS

SYMBOL DESIG.	NAME OF PART AND DESCRIPTION	FUNCTION	JAN OR NAVY TYPE DESIG.	SIGNAL CORPS STANDARD NAVY, AIR FORCE STOCK NO.	MANUFACTURERS		TELETYPE PART NO.	ALL SYMBOL DESIGNATIONS INVOLVED	TOTAL NO. PER EQUIP.	EQUIPMENT SPARE PARTS	
					CODE	DESIG.				BOX	QUAN
O-1704	COLLAR, set: steel, nickel pl; approx 3/8" lg x 7/8" OD x 15/32" ID; mts by ID; two tapped holes on circum	Positions O-1715 in O-1706		N17-T-350002-479	CTT	83740	83740	O-1704	2	0	0
O-1705	Same as O-1513	Supports O-1708									
O-1706	Same as O-1534	Supports and provides bearing surface for one end of O-1715									
O-1707	Same as O-1535	Provides means for adjusting height of O-1706									
O-1708	Same as O-1539	Drives message distributor-transmitter									
O-1709	Same as O-1513	Supports O-1710									
O-1710	Same as O-1539	Drives message distributor-transmitter									
O-1711	Same as O-1536	Used on MT-1369/FGC-38 for operating 100 wpm									
O-1712	Same as O-1537	Used on MT-1369/FGC-38 for operating 75 wpm									
O-1713	Same as O-1538	Used on MT-1369/FGC-38 for operating 60 wpm									
O-1714	Same as O-1539	Drives message distributor-transmitter									
O-1715	Same as O-1545	Supports and operates gears on message distributor-transmitter bases									
O-1716	Same as O-1534	Supports and provides bearing surface for one end of O-1715									
O-1717	Same as O-1535	Provides means for adjusting height of O-1716									
O-1718	Same as O-1554	Retains oil for O-1706 or O-1716									

O-1719	Same as O-1548	Provides clearance between A-1712 and A-1713							
O-1720	Same as O-1513	Supports O-1714							
O-1721	Same as O-1563	Locating bushing for message distributor-transmitter on A-1701							
O-1722	Same as O-1555	Used on MT-1371/FGC-39 for operating 60 wpm with 7.00 unit code							
O-1723	Same as O-1556	Used on MT-1370/FGC-38X for operating 60 wpm							
O-1724	Same as O-1557	Used on MT-1370/FGC-38X for operating 75 wpm							
O-1725	Same as O-1558	Used on MT-1370/FGC-38X for operating 100 wpm							
O-1726	Same as O-1559	Used on MT-1371/FGC-39 for operating 60 wpm with 7.00 unit code							
O-1727	Same as O-1560	Used on MT-1370/FGC-38X for operating 60 wpm							
O-1728	Same as O-1561	Used on MT-1370/FGC-38X for operating 75 wpm							
O-1729	Same as O-1562	Used on MT-1370/FGC-38X for operating 100 wpm							
O-1730	Same as O-1513	Supports drive gear for O-1715							
O-1800	RETAINER, ribbon spool: steel, cad pl; approx 1-3/16" lg x 1" h x 11/16" wd o/a; mts by body hole in rounded end; knurled handle stud riveted to end w/rear	Retains ribbon in time stamp	N17-T-350016-327	*1	CYG	58470	129719	0-1800	6	0	0
O-1801	WHEEL, spacing: zinc wheel, brass sprocket and pin; 24 tooth sprocket riveted to face of spacing wheel by three pins, hub in rear of spacing wheel; approx 2-15/32" diam x 9/16" lg o/a; mts by flatted ID	Provides clearance between O-1828 and O-1843			CYG	78943		O-1801	3	0	0

*1 Low Failure item - if required requisition from ESO referencing NavShips 900,180A

TABLE 8-4. COMBINED PARTS AND SPARE PARTS LIST

PARTS

SYMBOL DESIG.	NAME OF PART AND DESCRIPTION	FUNCTION	JAN OR NAVY TYPE DESIG.	SIGNAL CORPS STANDARD NAVY, AIR FORCE STOCK NO.	MANUFACTURERS		TELETYPE PART NO.	ALL SYMBOL DESIGNATIONS INVOLVED	TOTAL NO. PER EQUIP.	EQUIPMENT SPARE PARTS	
					CODE	DESIG.				BOX	QUAN
0-1802	SPRING: helical extension type; 0.013" diam music wire; 1/8" OD x 1-1/2" lg o/a; approx 99 turns; parallel hook terminals	Applies tension to 0-1810		N17-T-350016-352	CYG	58885	129725	0-1802	3	0	0
0-1803	SPRING: flat type; 0.020" thk nickel silver; 1-3/4" lg x 17/32" wd x 1/4" thk o/a; two mtg holes; one end bent and rounded, other end formed	Applies tension to 0-1849		N17-T-350016-396	CYG	43221	129707	0-1803	3	0	0
0-1806	LEVER ASSEMBLY: ratchet lock; all parts steel, nickel, chrome and cad pl; SS shaft; c/o two levers w/spacer between riveted to hub, shaft press fitted in hub; approx 2-7/16" lg x 1" wd x 2-9/16" h o/a; mts by shafts; body hole in one lever	Operates 0-1808 by 0-1810		N17-T-350016-357	CYG	91202	129738	0-1806	3	0	0
0-1808	RATCHET, drive: brass, nickel pl; c/o 60 tooth large ratchet and 24 tooth small ratchet riveted to hub; approx 2" OD x 5/32" ID x 7/16" lg o/a; mts by ID and two radial tapped holes in hub	Operates 0-1844		N17-T-350016-332	CYG	59166	129739	0-1808	3	0	0
0-1809	BEARING, sleeve: brass; approx 11/64" lg x 1/4" OD x 5/32" ID o/a	Provides support and pivot for 0-1810		N17-T-350016-329	CYG	59275	129728	0-1809	3	0	0
0-1810	ARM ASSEMBLY: armature operating; steel, nickel pl, brass bushing; c/o arm w/bushing, one link w/stud and pawl w/csk hole riveted to arm; approx 1-13/16" lg x 11/32" wd x 1-13/16" h o/a; mts by ID of bushing	Operates 0-1808		N17-T-350016-353	CYG	59165	129727	0-1810	3	0	0
0-1811	LEVER ASSEMBLY: ribbon feed shift; steel, nickel pl; c/o pawl, link, two levers, spacer, three studs, pin and two hubs riveted together; approx 5-1/2" lg x 5/8" wd x 2-9/32" h o/a; mts by ID of both hubs	Operates 0-1820		N17-T-350016-532	CYG	72509	129732	0-1811	3	0	0
0-1812	SPRING: flat type; ribbon feed retaining; 0.020" spring steel; approx 5-3/8" lg x 3/32" wd x 1-7/16" h o/a; mts by small curved spring riveted to ea end; half loop formed at ctr	Prevents 0-1820 from turning backward		N17-T-350016-415	CYG	72514	129733	0-1812	3	0	0

O-1813	DISK, retainer: brass, nickel pl; round, approx 5/32" ID x 7/8" OD x 0.016" thk o/a	Retains O-1812 on O-1820	*1	CYG	58743		O-1813	3	0	0
O-1814	LINK, lever: steel, nickel pl; approx 5" lg x 1-1/2" h x 3/16" wd, 0.050" thk material; mts by hole ea end; formed arm one end, not straight	Operates O-1811 by O-1857	*1	CYG	61567		O-1814	3	0	0
O-1815	SPRING: helical extension type; 0.020" diam music wire; 5/32" OD x 1-33/64" lg o/a; approx 63 turns; parallel hook terminal	Applies tension to O-1811	N17-T-350016-344	CYG	63	129701	O-1815	3	0	0
O-1816	RETAINER, printing plate: brass retainer, steel pin, nickel pl; pin riveted to retainer, bent ear near ea end; approx 1-1/16" lg x 15/32" h x 19/32" lg o/a; mts by body hole above ea ear	Supports and provides pivot for O-1811	*1	CYG	59921		O-1816	3	0	0
O-1817	TOGGLE, reverse: ribbon feed retaining spring; steel, nickel pl; narrow end rounded w/stud and roller, two rounded ears on wd end; mts by body hole; approx 5/16" lg x 9/16" wd x 51/64" h o/a	Reverses O-1820	*1	CYG	72507		O-1817	3	0	0
O-1818	SPRING: helical extension type; 0.014" diam music wire; 1/8" OD x 25/32" lg o/a; parallel hook terminals	Applies tension to O-1817	N17-T-350016-333	CYG	59942	129729	O-1818	3	0	0
O-1819	SPRING: flat type; 0.010" thk steel; 1-3/16" lg x 9/32" wd x 5/16" thk o/a; one mtg hole	Applies tension to O-1836, O-1837 or O-1840	N17-T-350016-392	CYG	43388	129710	O-1819	9	0	0
O-1820	RATCHET, ribbon: steel, nickel pl; approx 7/64" lg x 19/32" diam o/a; mts by #8-32 thd ctr hole; 24 teeth on OD	Operates O-1824 by O-1811	*1	CYG	58423		O-1820	6	0	0
O-1822	ROLLER, ribbon: steel, cad pl; approx 2-11/64" lg x 7/32" diam o/a; mts by shank ea end 5/32" lg x 3/32" diam	Supports ribbon	*1	CYG	58549		O-1822	3	0	0
O-1823	SPRING: flat type; 0.010" thk steel; 21/32" lg x 9/32" wd x 1/4" thk o/a; one mtg hole	Applies tension to O-1836, O-1837 or O-1840	N17-T-350016-349	CYG	43387	129709	O-1823	9	0	0
O-1824	RIBBON, printing: blue; 1-27/32" wd; approx 60" lg; metal spool	Provides ink for time stamp	6M1168-8 N17-T-350016-325	CYG	61563	128281	O-1824	3	1	3

*1 Low Failure item - if required requisition from ESO referencing NavShips 900,180A

TABLE 8-4. COMBINED PARTS AND SPARE PARTS LIST

PARTS										EQUIPMENT SPARE PARTS	
SYMBOL DESIG.	NAME OF PART AND DESCRIPTION	FUNCTION	JAN OR NAVY TYPE DESIG.	SIGNAL CORPS STANDARD NAVY, AIR FORCE STOCK NO.	MANUFACTURERS CODE	MANUFACTURERS DESIG.	TELETYPE PART NO.	ALL SYMBOL DESIGNATIONS INVOLVED	TOTAL NO. PER EQUIP.	BOX	QUAN
0-1825	LEVER ASSEMBLY: steel, nickel pl; c/o three levers staked to shaft; approx 2" lg x 2-1/8" h x 9/16" wd o/a; mts by small shank on ea end of shaft; pin riveted to one end lever, other end lever formed	Operates 0-1847 by 0-1846		*1	CYG	43376		0-1825	3	0	0
0-1826	SPRING: helical extension type; 0.015" diam music wire; 5/32" OD x 29/32" lg o/a; approx 39-1/2 turns; parallel hook terminals	Applies tension to 0-1831		N17-T-350016-350	CYG	58851	129722	0-1826	3	0	0
0-1827	SPRING: helical extension type; 0.015" diam music wire; 11/64" OD x 15/16" lg o/a; approx 40 turns; parallel hook terminal	Applies tension to 0-1829 or 0-1830		N17-T-350016-351	CYG	58852	129723	0-1827	6	0	0
0-1828	SPROCKET, date wheel: brass, zinc pl pin; 31 teeth on circum pin riveted to face above cut-out; approx 1-41/64" OD x 5/16" ID x 1/8" thk o/a; mts by ID; two body holes in face	Provides means for changing date wheel for 28, 29, 30 and 31 day months		N17-T-350016-356	CYG	78921		0-1828	3	0	0
0-1829	LEVER: month lock; steel lever, brass hub, nickel pl; hub riveted to lever, two curved arms, curved bent ear below hub; approx 1-3/4" lg x 39/64" wd x 1-9/16" h o/a; mts by ID of hub	Locks 0-1846 in position		N17-T-350016-391	CYG	43389	129711	0-1829	3	0	0
0-1830	LEVER: date lock; steel lever, brass hub, nickel pl; hub riveted to lever, two curved arms, one bent near end, curved bent ear near hub; approx 1-3/4" lg x 21/32" wd x 1-17/32" h o/a; mts by ID of hub	Locks 0-1847 in position		N17-T-350016-390	CYG	43394	129712	0-1830	3	0	0
0-1831	LEVER: hour lock; steel, nickel pl; two curved arms w/notches near end, curved bent ear near welded hub; approx 1-3/4" lg x 17/32" wd x 1-9/16" h o/a; mts by ID of hub	Locks 0-1848 in position		N17-T-350016-398	CYG	43399	129713	0-1831	3	0	0
0-1832	SHAFT: throwing lever; SS; formed head and straight knurl one end, groove near other end; approx 2-9/32" lg x 5/32" diam o/a; mts by body	Supports and provides pivot for 0-1829, 0-1830 and 0-1831		*1	CYG	58965		0-1832	3	0	0

O-1833	GUIDE, throwing bar; steel, zinc pl; approx 2-17/32" lg x 17/32" wd x 7/16" h o/a; mts by body hole one end and slot other end; one side formed w/2 guide slots	Guides O-1829, O-1830 and O-1831	*1	CYG	58864		O-1833	3	O	O
O-1834	ROLLER, ribbon; brass; approx 1-3/4" lg x 7/32" OD x 3/32" ID o/a; mts by ID	Supports ribbon	*1	CYG	58834		O-1834	3	O	O
O-1835	ROD, fulcrum; steel; approx 2-1/16" lg x 3/32" wd x 5/32" thk o/a; mts by body; slight bend in middle	Supports and provides pivot for O-1834	*1	CYG	58835		O-1835	3	O	O
O-1836	LEVER ASSEMBLY: month throw lever; brass and steel; c/o of lever and arm riveted together, bushing staked to lever; cam follower w/roller staked to bushing; approx 2-7/8" lg x 5/8" wd x 4-9/16" h o/a; mts by ID of bushing; number "3" stamped in formed ear of lever; elongated slot and formed ear of lever	Operates O-1846	*1	CYG	58861		O-1836	3	O	O
O-1837	LEVER ASSEMBLY: date throw lever; steel, nickel pl and brass; c/o lever and arm riveted together, bushing staked to lever; cam follower w/roller staked to bushing; approx 2-7/8" lg x 13/16" wd x 4-9/16" h o/a; mts by ID of bushing; number "2" stamped in formed ear of lever; elongated slot and formed ear on lever	Operates O-1847	*1	CYG	58721		O-1837	3	O	O
O-1838	SPRING: helical extension type; 0.022" diam music wire; 1/8" OD x 2-1/4" lg o/a; approx 89 turns; parallel hook terminals	Applies tension to O-1836	*1	CYG	58850	129741	O-1838	3	O	O
O-1839	SPRING: helical extension type; 0.022" diam music wire; 1/8" OD x 2-1/8" lg o/a; approx 84 turns; parallel hook terminals	Applies tension to O-1837	*1	CYG	58849	129740	O-1839	3	O	O
O-1840	LEVER ASSEMBLY: hour throw lever; steel and brass; c/o lever and arm riveted together, bushing staked to lever; cam follower staked to bushing; approx 2-7/8" lg x 5/8" wd x 4-9/16" h o/a; mts by ID of bushing; number "1" stamped in formed ear of lever; elongated slot and formed spring ear on lever	Operates O-1848	*1	CYG	58862		O-1840	3	O	O

*1 Low failure item - if required requisition from ESO referencing NavShips 900,180A

TABLE 8-4. COMBINED PARTS AND SPARE PARTS LIST

PARTS										EQUIPMENT SPARE PARTS	
SYMBOL DESIG.	NAME OF PART AND DESCRIPTION	FUNCTION	JAN OR NAVY TYPE DESIG.	SIGNAL CORPS STANDARD NAVY, AIR FORCE STOCK NO.	MANUFACTURERS CODE	MANUFACTURERS DESIG.	TELETYPE PART NO.	ALL SYMBOL DESIGNATIONS INVOLVED	TOTAL NO. PER EQUIP.	BOX	QUAN
O-1841	SPRING: helical extension type; 0.023" diam music wire; 1/8" OD x 2-1/16" lg; approx 78 turns; parallel hook terms	Applies tension to O-1840		N17-T-350016-331	CYG	58829	129721	O-1841	3	0	0
O-1842	GEAR AND BUSHING ASSEMBLY: spur type; brass; straight teeth; 52 teeth; 32 pitch; approx 19/32" lg x 1-43/64" OD x 3/16" ID o/a; straight face w/6 equidistant holes 3/8" diam; hub w/shoulder 3/8" lg x 9/16" diam o/a one side, other side 3/16" lg x 0.290" diam; mts by axial hub hole w/tapped radial hole; no markings	Drives minute type wheel		*1	CYG	43320		O-1842	3	0	0
O-1843	WHEEL, type: types minutes; zinc; approx 2-9/16" OD x 15/32" ID x 9/32" thk o/a; mts by ID; raised type "00" through "59" on circum; 52 teeth, 32 pitch gear on one side, hub extends on other side, six equidistant holes through wheel and gear	Provides type for stamping minute		*1	CYG	45455		O-1843	3	0	0
O-1844	SHAFT ASSEMBLY: steel; approx 3-7/32" lg x 5/8" diam o/a; mts by body; cam near one end	Supports and drives O-1842		*1	CYG	58391		O-1844	3	0	0
O-1845	SPRING: helical extension type; 0.010" diam music wire; 1/8" OD x 13/32" lg o/a; approx 19-1/2 turns; parallel hook terminals	Applies tension to O-1825		N17-T-350016-335	CYG	58414	129718	O-1845	3	0	0
O-1846	WHEEL, type: types month; zinc; approx 2-9/16" OD x 9/32" ID x 13/32" thk o/a; mts by ID; 24 months in raised type on circum; 24 tooth gear on one side, irregular matched cutout other side, 24 equidistant holes through wheel	Provides type for stamping month on tape		*1	CYG	45458		O-1846	3	0	0
O-1847	WHEEL, assembly: types dates; c/o IBM parts #78921, #45457, #78919, #43275, #33876(4); zinc; approx 2-9/16" diam x 11/16" lg o/a; mts by ID	Provides type for stamping date on tape		N17-T-350016-607	CYG	45468	129714	O-1847	3	0	0

O-1848	WHEEL, assembly: types minute, hour and spacing; c/o IBM parts #72793, #45455, #78943, #53923; zinc; approx 2-9/16" diam x 13/16" lg o/a; mts by ID; raised minute and hour characters on circum of two wheels, straight face on other w/ratchet gear and hex nut	Provides type for stamping minute on tape	N17-T-350016-606	CYG	74526	129735	O-1848	3	0	0
O-1849	WHEEL, type: types year; zinc SS shaft; approx 2-9/16" diam x 2-1/8" lg o/a; mts by shoulder at ea end of shaft; raised type w/12 consecutive year characters; type wheel w/3 equidistant pins, 12 equidistant csk holes and one body hole, attached to one end of shaft	Provides type for stamping year on tape	*1	CYG	58588		O-1849	3	0	0
O-1850	BUSHING: drive; steel, cad pl; male; approx 5/8" OD x 1/8" ID x 11/32" lg o/a, insert w/elongated ID inserted in face, body hole in flange, notch on circum, 5/16" diam body	Operates lock lever assembly	N17-T-350016-347	CYG	12138-S37	129705	O-1850	3	0	0
O-1851	CAM: steel cam, chrom pl; brass pin; approx 5/8" lg x 17/32" wd x 9/32" thk o/a; mts by 1/8" diam hole; pin assembled to cam	Operates O-1806	N17-T-350016-343	CYG	12138-S21	129703	O-1851	3	0	0
O-1852	CAM: nylon; approx 11/16" OD x 1/8" ID x 1/8" thk o/a; mts by ID; one body hole, notch in circum	Operates S-1800	N17-T-350016-346	CYG	12138-S33	129704	O-1852	3	0	0
O-1853	PLATEN ASSEMBLY: printer platen c/o IBM #61969 lift rod moulded in ctr of platen; cast zinc platen, bronze lift rod; approx 2-1/4" lg x 1-15/16" wd x 2-19/32" h o/a, platen 7/16" thk; mts by lift rod body w/axial hole #10-32 thd	Drives tape against type wheels	N17-T-350016-483	CYG	58359	129716	O-1853	3	0	0
O-1854	SPRING: helical extension type; 0.013" diam music wire; approx 1/8" OD x 1/2" lg o/a; approx 20 turns; parallel hook terminal	Applies tension to ribbon drive ratchet pawl	N17-T-350016-397	CYG	71296	129731	O-1854	3	0	0
O-1855	DETENT: ribbon drive ratchet; steel, blue finish; one end rounded, lg narrow curved finger, other end approx 1-9/64" lg x 5/16" wd x 3/16" h o/a; mts by two elongated holes	Lock ribbon feed ratchet in advanced position	N17-T-350016-354	CYG	74527	129736	O-1855	3	0	0

*1 Low Failure item - if required requisition from ESO referencing NavShips 900,180A

TABLE 8-4. COMBINED PARTS AND SPARE PARTS LIST

PARTS										EQUIPMENT SPARE PARTS	
SYMBOL DESIG.	NAME OF PART AND DESCRIPTION	FUNCTION	JAN OR NAVY TYPE DESIG.	SIGNAL CORPS STANDARD NAVY, AIR FORCE STOCK NO.	MANUFACTURERS CODE	MANUFACTURERS DESIG.	TELETYPE PART NO.	ALL SYMBOL DESIGNATIONS INVOLVED	TOTAL NO. PER EQUIP.	BOX	QUAN
0-1856	WHEEL, ratchet: ribbon feed; steel, nickel pl; 18 tooth ratchet, pin riveted to face; approx 19/32" OD x 3/16" ID x 11/64" thk o/a; mts by ID	Operates 0-1814 by 0-1856		N17-T-350016-389	CYG	62590	129730	0-1856	3	0	0
0-1857	WHEEL, type: types date; zinc; recessed hub, 11 body holes and one elongated hole in face; approx 2-9/16" OD x 1/4" ID x 5/16" thk o/a; mts by ID; raised numbers "1" through "31" on circum	Type wheel for stamping date		N17-T-350016-330	CYG	45457		0-1857	3	0	0
0-1858	WHEEL, type: types hours; zinc; six equidistant body holes and threaded bushing w/2 flats in recessed face; approx 2-9/16" OD x 1/4" ID x 13/16" lg o/a; mts by ID; raised numbers "00" through "23" on circum	Type wheel for stamping the hour		*1	CYG	72793		0-1858	3	0	0
0-1859	WASHER, flat: synthetic rubber; round; 5/8" ID, 1-11/32" OD, 5/32" thk	Provides stop for E-1801		*1	CYG	58370		0-1859	3	0	0
0-1860	ARM: knockout operating; linen delecto; narrow end rounded, other end irregular shape; approx 1-47/64" lg x 3/4" wd x 0.094" thk o/a; csk hole in narrow end	Operates S-1801		N17-T-350016-345	CYG	12138-S12	129702	0-1860	3	0	0
0-1861	SEGMENT, date change: steel, nickel pl; one end rounded, three teeth other end, three pins riveted below teeth; approx 1-1/8" h x 41/64" wd x 5/32" thk o/a; mts large body hole in rounded end; small body hole near pins	Provides means for changing date wheel for 28, 29, 30 and 31 day months		N17-T-350016-355	CYG	78919	129737	0-1861	3	0	0
0-1862	SPRING: loop type; for date wheel; 0.014" diam music wire; approx 2-7/16" lg x 15/16" wd x 1/8" h o/a; mts by formed ends	Applies tension to 0-1861		N17-T-350016-348	CYG	43275	129708	0-1862	3	0	0
0-1863	SPACER: brass; approx 1/8" lg x 5/16" OD x 7/32" ID o/a; mts by ID	Provides clearance between 0-1852 and A-1813		*1	CYG	12138-S31		0-1863	3	0	0
0-1901	GUIDE, tape: steel; bent rod; approx 2-19/32" lg x 1/32" wd x 31/32" h o/a	Guides tape out of receiver tape container to reperforator		4T128862 N17-T-350016-475	CTT	128862	128862	0-1901	4	0	0

O-1902	CORE, tape reel: acts as core for tape reel; maple wood, black lacquer; cyl disk shape w/shaft projection as face; approx 1-31/32" OD x 1-5/32" thk o/a; two mtg hubs	Holds tape roll	4T111545 N17-T-350016-225	CTT	111545	111545	O-1902	8	O	O
O-1903	POST: screw steel; approx 1/4" diam x 7/8" lg o/a; two #6-40 thd mtg holes	Separates A-1901 and A-1902	4T111537 N17-T-350016-443	CTT	111537	111537	O-1903	16	O	O
O-1904	LEVER: tape out; steel; flat wire, round edge; approx 5-13/32" lg x 1-1/8" h x 1/4" thk o/a; one 5/32" diam mtg hole	Lever to actuate E-1903 when tape roll is down to a specified level	4T128603 N17-T-350016-240	CTT	128603	128603	O-1904	4	O	O
O-1905	PIN: screw steel; approx 7/8" lg x 5/32" diam o/a	Pivot pin for A-1904	6L3942-14-6 N17-T-350016-448	CTT	123853	123853	O-1905	4	O	O
O-1906	SPRING: helical extension type; 0.020" diam music wire; approx 23/32" lg x 3/16" OD o/a; 22 turns; hook term, indexed at 90°	Applies tension to O-1904	N17-T-350006-408	CTT	55063	55063	O-1906,O-1920	8	O	O
O-1908	Same as O-300	Spring stiffener for E-1905								
O-1921	SPRING: helical extension type; 0.035" diam music wire; approx 1-11/16" lg x 1/4" OD x 3/16" ID o/a; approx 33 turns; hook terminal, indexed 90°; mts by terminals	Spring for shelf latch	N17-T-350006-483	CTT	76296	76296	O-1921	8	O	O
O-1922	SPRING: helical compression; spring wire 0.043" diam; approx 1-1/16" lg x 7/32" ID; eight turns; both ends ground sq	Spring for tape container assembly	N17-T-350012-608	CJB	10394	84006	O-1922	8	O	O
O-1923	Same as O-320	Shock mount for reperforator								
O-1924	SHIM: SS, nickel pl; rectangular shape w/2 slots; approx 1-3/4" lg x 5/8" wd x 0.016" thk o/a; two mtg slots	Shim for shelf slides	4T116017 N17-T-350016-214	CTT	116017	116017	O-1924	42	O	O
O-1925	Same as O-325	Spring for door latch								
O-1926	Same as O-326	Shim for center support								
O-1927	GRIP, tape assembly: brass, white nickel pl; one end has #6-40 thd, other end has 5/8" diam knob; approx 1-3/16" lg x 5/8" diam o/a; mts by threaded shank	Holds message tape to cabinet	4TV118578 N17-T-350016-530	CJB	A118578-A	128654	O-1927	2	O	O

*1 Low Failure item - if required requisition from HSO referencing Navships 900,180A

TABLE 8-4. COMBINED PARTS AND SPARE PARTS LIST

PARTS										EQUIPMENT SPARE PARTS	
SYMBOL DESIG.	NAME OF PART AND DESCRIPTION	FUNCTION	JAN OR NAVY TYPE DESIG.	SIGNAL CORPS STANDARD NAVY, AIR FORCE STOCK NO.	MANUFACTURERS CODE	MANUFACTURERS DESIG.	TELETYPE PART NO.	ALL SYMBOL DESIGNATIONS INVOLVED	TOTAL NO. PER EQUIP.	BOX	QUAN
0-1928	SPRING: helical compression type; 0.032" diam music wire; approx 5/8" lg x 1/4" OD o/a; eight turns; flat ends	Applies tension to 0-1927		4T128655 N17-T-350016-482 1730-043952545	CTT	128655	128655	0-1928	2	0	0
0-1929	GUIDE, tape: steel, nickel pl; bent rod; approx 3-3/16" lg x 1-9/16" wd x 4-3/8" h o/a	Guides tape to punch block		4T128861 N17-T-350016-476	CTT	128861	128861	0-1929	4	0	0
0-1930	DEFLECTOR, tape: steel; approx 3-1/16" lg x 2-7/8" wd x 2-1/4" h o/a; two mtg slots	Guides tape out of cabinet		N17-T-350016-733	CTT	128596	128596	0-1930	4	0	0
0-1991	BAR, release: steel, nickel pl; flat bar, rounded ends; 14-23/32" lg x 1/2" wd x 1/8" thk o/a; mts by #10-32 thd hole near ea end; stamped "F" at one end; eight #10-32 holes between mtg holes	Release bars for sliding shelves		N17-T-350016-645	CTT	128575	128575	0-1991	4	0	0
0-1992	ARM: latching arm; steel, nickel pl; flat strip, mtg end rounded, other end straight w/broken corners; 5-5/8" lg x 1/2" wd x 1/8" thk o/a; mts by #10-32 thd hole 1/4" from rounded end	Right latch for sliding shelves		N17-T-350016-646	CTT	128574	128574	0-1992,0-1993	8	0	0
0-1993	Same as 0-1992	Left latch for sliding shelves									
0-1994	SPRING: helical compression type; 0.040" diam music wire; approx 41/64" lg x 27/64" OD o/a; six turns; straight ends	Provides yield for tape container assembly		N17-T-350016-661	CTT	102939	102939	0-1994	8	0	0
0-1995	BUSHING: steel, nickel pl; male and female; approx 33/64" lg x 3/4" OD x 1/4" ID o/a, 5/64" lg x 7/16" diam shoulder	Bushing for pivot screw of rotating trays		4T128581 N17-T-350016-643	CTT	128581	128581	0-1995	4	0	0
0-1996	ROLLER, tray: steel, nickel pl; 21/32" OD x 1/4" ID x 3/16" thk o/a; mts by ID; chamfered edges	Roller for rotating trays		4T128579 N17-T-350016-697	CTT	128579	128579	0-1996	12	0	0
0-1997	SHAFT: steel, nickel pl; 1-1/8" lg x 1/4" diam; mts by #6-40 thd radial hole 9/64" from one end	Support for 0-1996		4T128580 N17-T-350016-644	CTT	128580	128580	0-1997	12	0	0
0-1998	SHAFT: steel, nickel pl; approx 1-5/32" lg x 5/16" diam o/a; mts by shank ea end; has 5/8" lg knurled body	Shaft for tape roll		4T111546 N17-T-350016-665	CTT	111546	111546	0-1998	4	0	0

O-1999	PLATE, stop: steel, nickel pl; 15/16" lg x 13/16" wd x 0.090" thk o/a; mts by two #6-40 thd holes 1/2" c to c; one #10-32 thd hole	Stop plate for patching frame	4T128665 N17-T-350016-639	CTT	128665	128665	O-1999	1	O	O
O-2098	BUSHING: steel, nickel pl; male; 1-1/32" lg x 5/8" OD x 5/32" ID, shoulder 1/16" lg, body 23/64" OD	Seat distributor-transmitter base on vibration mount.	4T128898 N17-T-350016-635	CTT	128898	128898	O-2098	4	O	O
O-2099	BAR, latching: steel, nickel pl; both ends formed, body formed; 6-15/32" lg x 1/2" wd x 23/32" h o/a; mts by elongated hole; #4-40 thd hole near mtg hole	Latch for control panel rack	4T128891 N17-T-350016-636	CTT	128891	128891	O-2099	1	O	O
O-2101	SPACER: steel, round; 11/16" OD x 5/16" ID x 0.056" thk o/a; mts by ID	Provides clearance between A-2101 and O-1162	N17-T-350016-714	CTT	135018	135018	O-2101	4	O	O
O-2102	BEARING, roller: single row radial; light duty needle type; cylindrical rollers; 0.497" OD, 0.314" bore, 0.312" wd; packed w/high grade slushing compound; std fit; ABEC-1 std tol	Bearing for O-1168	N77-B-354-00501-5300	TOR	GB-55	129984	O-2102	4	O	O
O-2103	CAM: tape feed-out; steel, nickel pl; approx 11/16" largest rad X 5/16" ID x 25/64" lg; mts by ID and ctb radial hole through hub; body hole cam	Drives O-2105 through O-2108	N17-T-350016-742	CTT	129986	129986	O-2103	4	O	O
O-2104	PLATE, spacer: steel, nickel pl; rectangular shape; 2-5/8" lg x 5/8" wd x 0.035" thk o/a; mts by two elongated slots 1" c to c in one edge	Provides clearance between A-2102 and A-811	N17-T-350016-744	CTT	129992	129992	O-2104	12	O	O
O-2105	LEVER: steel, nickel pl; irregular shape, formed in approx ctr; 3-21/32" lg x 1-15/32" wd x 1/4" h o/a, 0.109" thk material; mts by ctb hole near one end; csk hole and two #10-32 thd holes	Drives O-1075 through O-2107	N17-T-350016-743	CTT	129991	129991	O-2105	4	O	O
O-2106	SPRING: helical extension type; 0.016" diam music wire; 11/16" lg x 5/32" OD o/a; approx 26 turns; parallel hook terminal	Provides tension for O-2105	N17-T-350007-399 1730-482432000	CTT	55669	55669	O-2106	4	O	O
O-2107	FOLLOWER: steel, 5/8" sq x 3/16" thk o/a; mts by ctr body hole; rounded corners	Drives O-1075	N17-T-350016-749	CTT	135019	135019	O-2107	4	O	O
O-2108	ROLLER: steel; round, chamfered circum, csk ID; approx 43/64" OD x 9/32" ID x 3/16" lg o/a; mts by ID	Drives O-2105	N17-T-350016-756	CTT	129989	129989	O-2108	4	O	O
O-2109	BUSHING: steel; male; approx 13/32" OD x 3/16" ID x 7/32" lg o/a; neck between 1/32" lg shoulder and 9/32" diam body	Provides pivot for O-2107 and O-2108	N17-T-350016-755	CTT	129988	129988	O-2109	8	O	O

TABLE 8-4. COMBINED PARTS AND SPARE PARTS LIST

PARTS										EQUIPMENT SPARE PARTS	
SYMBOL DESIG.	NAME OF PART AND DESCRIPTION	FUNCTION	JAN OR NAVY TYPE DESIG.	SIGNAL CORPS STANDARD NAVY, AIR FORCE STOCK NO.	MANUFACTURERS CODE	MANUFACTURERS DESIG.	TELETYPE PART NO.	ALL SYMBOL DESIGNATIONS INVOLVED	TOTAL NO. PER EQUIP.	BOX	QUAN
O-2110	FOLLOWER, detent: nickel silver rectangular shape; one end formed; 39/64" lg x 3/8" wd x 5/32" h o/a, 0.015" thk material; mts by body hole	Stop of O-2107		N17-T-350016-750	CTT	135046	135046	O-2110	4	0	0
P-101	CONNECTOR, male contact: 26 rectangular polarized contacts; straight; 2-15/16" lg x 1-1/8" wd x 1-13/16" h less contacts and cable clamp; rectangular body, steel, black crackle paint; molded black bakelite insert; 5/8" cable opening; cable clamp one end, drive pin in face	Connector for SB-358/FGC		N17-C-71634-3668	CJC	P-327CCE	128620	P-101	4	0	0
P-301	PLUG, connector: male one end, other end female; two contacts; straight type; approx 1-11/16" lg x 7/8" diam o/a; cylindrical steel body, blk crackle finish; blk bakelite insert; cable opening 1/4"; mts by cable clamp	Connects to J-700 on monitor reperforator		N17-C-71427-6126	CJC	P-302CCT	119525	P-301,P-1901	2	0	0
P-401	CONNECTOR, male contact: three rectangular pol cont; straight type; approx 1-9/16" OD x 1-3/8" lg less cont; 15 amp, 125 v; cylindrical, steel, cad pl; molded blk bakelite insert; cable opening 5/8" diam; cable clamped by two screws	Plug for B-401		N17-T-350008-554	CHU	7309	78369	P-401	3	0	0
P-501	CONNECTOR, plug: three flat polarized blades; straight type; 1-19/32" diam x 1-1/4" lg; cylindrical rubber body; 1/2" cable opening; cable clamp	AC connector for PP-987/U		N17-C-71459-8512	CHU	7055	112695	P-501	2	0	0
P-502	CONNECTOR, receptacle: bakelite core, steel body, black crackle finish; steel clamp, nickel finish; four connector female plug; 1-1/16" wd x 1-1/16" lg x 1-7/8" h	DC connector for PP-987/U		N17-C-71186-6280	CJC	S-404CCT	105709	P-502	2	0	0
P-700	CONNECTOR, male contact: three rectangular polarized contacts; straight type; approx 2-1/16" lg x 1-9/16" diam o/a; 10 amp, 250 v; cylindrical rubber covered; molded bakelite insert; cable opening 19/64" to 9/16"; mts by cable clamp; includes cable grip	AC power connector for synchronous motor		N17-T-350004-114	CHU	9750	101965	P-700	7	0	0

P-701	CONNECTOR, male contact: 15 rectangular polarized contacts; straight type; body approx 1-13/16" lg x 1-11/16" wd x 1-1/16" thk, less contacts and cable clamp; rectangular body, steel, black crackle finish; molded phenolic insert; 5/8" cable opening; mts by cable clamp, cable clamp one end, two latches other end	Reperforator signal plug		N17-C-71593-7581	CJC	P-315-CTT-L	129209	P-701	7	0	0
P-1500	CONNECTOR, male contact: three rectangular polarized contacts; angle type 90°; 1-9/16" diam x 2-1/4" o/a; 15 amp, 125 v; cylindrical steel body; bakelite insert; cable opening 1/2" to 5/8" diam; includes cable clamp	AC power connector for MT-1372/FGC-38, MT-1373/FGC-38X and MT-1374/FGC-39		N17-C-71459-8575	CHU	7368	102898	P-1500,P-1700	3	0	0
P-1501	CONNECTOR, male contact: 26 rectangular polarized contacts; straight type; body approx 2-15/16" lg x 1-1/8" wd x 1-13/16" h, less contacts, cable clamp and latches; rectangular body, steel, black crackle finish; molded phenolic insert; 5/8" cable opening; cable clamp one end, drive pin in face, one latch ea side	Signal plug for MT-1372/FGC-38, MT-1373/FGC-38X and MT-1374/FGC-39		N17-C-71640-2351	CJC	P-327-CCE-L	129210	P-1501,P-1701	3	0	0
P-1700	Same as P-1500	Signal plug for MT-1369/FGC-38, MT-1370/FGC-38X and MT-1371/FGC-39									
P-1701	Same as P-1501	Signal plug for MT-1369/FGC-38, MT-1370/FGC-38X and MT-1371/FGC-39									
P-1901	Same as P-301	Connect to J-700 on receiver reperforator									
R-101	RESISTOR, fixed: ww; 50 ohms ±5%; 1 w continuous open rating; body dimen 5/8" lg x 7/8" diam; cellulose acetate coating; two solder lug term	Filter for K-101		3Z6005-229 3350-468000-4511	CAU	D-2851-05-A	129402	R-101,R-104 R-210	11	0	0
R-102	RESISTOR, fixed: ww; 2,000 ohms ±5%; 1 w continuous open rating; body dimen 5/8" lg x 7/8" diam; cellulose acetate coating; two solder lug term	Filter for K-102		3Z6200-251 N16-R-66102-6251 3350-468000-7485	CAU	D-2851-17-A	129400	R-102,R-103 R-105,R-106 R-107,R-206 R-208,R-213	29	0	0
R-103	Same as R-102	Filter for K-102 contact 2									
R-104	Same as R-101	Filter for K-103									
R-105	Same as R-102	Filter for K-105 spacing contact									
R-106	Same as R-102	Filter for K-105 marking contact									

TABLE 8-4. COMBINED PARTS AND SPARE PARTS LIST

PARTS									EQUIPMENT SPARE PARTS	
SYMBOL DESIG.	NAME OF PART AND DESCRIPTION	FUNCTION	JAN OR NAVY TYPE DESIG.	SIGNAL CORPS STANDARD NAVY, AIR FORCE STOCK NO.	MANUFACTURERS CODE	MANUFACTURERS DESIG.	TELETYPE PART NO.	ALL SYMBOL DESIGNATIONS INVOLVED	TOTAL NO. PER EQUIP.	BOX	QUAN
R-107	Same as R-102	Filter for K-106 contact arm									
R-108	RESISTOR, fixed: ww; 100 ohms ±10%; 5 w continuous open rating; body dimen 1" lg x 5/16" diam; vitreous enamel coating; two solder lug term	Decoupling resistor for K-106 contact arm filter		N16-R-70503-1381 3350-492000-2786	CAO	5F100-WL	129502	R-108	4	0	0
R-109	RESISTOR, fixed: ww; 4,000 ohms ±10%; 10 w continuous open rating; body dimen 1-3/4" lg x 5/16" diam, vitreous enamel coated; two solder lug terminals	Voltage dropping resistor for K-106 bias winding when used for 30 ma bias current		N16-R-70681-4326 3350-516000-6895	CAO	10F4000-WL	129486	R-109,R-203	7	0	0
R-110	RESISTOR, fixed: ww; 8,000 ohms ±10%; 15 w continuous open rating; approx 2" lg x 1/2" OD x 5/16" ID; vitreous enamel; two solder lug term 7/16" lg; mts by ID; "8000" stamped on side	Voltage dropping resistor for K-106 bias winding when used for 10 ma bias current		N17-T-350008-832	CAO	0 w/211 term	81775	R-110	4	0	0
R-111	RESISTOR, fixed: ww; 1,500 ohms ±10%; 15 w; approx 2" lg x 15/32" OD x 9/32" ID; vitreous enamel; two 13/32" lg lug terms; mts by ID; "1500" stamped on side	Voltage dropping resistor for K-105 and reperforator selector magnet		N16-R-66080-5618 3350-527000-4954	CAO	D w/211 term	95238	R-111,R-700	8	0	0
R-201	RESISTOR, fixed: ww; 500 ohms ±10%; 10 w continuous open rating; body dimen 1-3/4" lg x 5/16" diam; vitreous enamel coated; two solder lug term	Transmitting line voltage dropping resistor		N16-R-65886-7286 3350-516000-4473	CAO	10F500-WL	129487	R-201	3	0	0
R-202	RESISTOR, adjustable: ww; 750 ohms ±10%; 10 w continuous open rating; one slide provided; body dimen 1-3/4" lg x 5/16" diam; vitreous enamel coated; two solder lug term	Provides transmitting line current adjustment		N16-R-43510-7374 3350-516000-4627	CAO	10A750-WL	129404	R-202	3	0	0
R-203	Same as R-109	Bias voltage dropping resistor for K-201 bias winding									
R-204	RESISTOR, fixed: ww; 1,750 ohms ±10%; 20 w continuous open rating; body dimen 2" lg x 9/16" diam; vitreous enamel coated; two solder lug term	Transmitting line voltage dropping		3350-536000-2466	CAO	20F1750-WL	129403	R-204	3	0	0

R-205	RESISTOR, fixed: ww; 1,000 ohms ±10%; 20 w continuous open rating; body dimen 2" lg x 9/16" diam; vitreous enamel coated; two solder lug term	Transmitting line voltage dropping resistor for polar operation	N16-R-66034-4821	CAO	20F1000-WL	129488	R-205	3	0	0
R-206	Same as R-102	Filter for K-202 contacts 7 and 8								
R-207	RESISTOR, variable: ww; 3,500 ohms ±10%; 25 w; three solder lugs; metal case 1-9/16" d, enclosed case, sliding brush type; round metal shaft 1/4" diam x 1/2" lg from mtg surface; linear taper; ins cont arm; normal torque; mts by bushing 3/8"-32 thd 9/16" lg	Provides adjustment for transmitting line current	N16-R-90935-9205	CAO	25R-3500 ohms	128608	R-207	3	0	0
R-208	Same as R-102	Filter for K-206 marking contacts								
R-209	RESISTOR, fixed: ww; 3,000 ohms ±5%; 1 w continuous open rating; body dimen 5/8" lg x 7/8" diam; cellulose acetate coating; two solder lug term	Filter for K-208 contact 6 and 7	326300-260	CAU	D-285119-A	129401	R-209, R-211 R-212, R-214	12	0	0
R-210	Same as R-101	Filter for K-208								
R-211	Same as R-209	Filter for K-209 contacts 3T and 4T								
R-212	Same as R-209	Filter for K-209 contacts 5T and 6T								
R-213	Same as R-102	Filter for K-209 contacts 3B and 4B								
R-214	Same as R-209	Filter for K-209 contacts 5B and 6B								
R-501	RESISTOR, fixed: composition	Bleeder resistor for 115 v DC output for neutral operation	JAN #RC40-BF153K	N16-R-50337-726	CBZ	HB1531	129388	R-501	2	0	0
R-502	RESISTOR, fixed: composition	Bleeder resistor for polar operation voltage output	JAN #RC40-BF104K	N16-R-50634-726	CBZ	HB1041	129389	R-502	2	0	0
R-600	RESISTOR, fixed: ww; 550 ohms ± 10%; 2 taps, 250 ohms 75 w, 300 ohms 15 w; body dimen 5" lg x 1-1/8" diam; vitreous enamel; three solder lug term, 3/8" lg x 3/16" wd; mts by 3/4" ID	Governed motor voltage dropping resistor	N17-T-350004-450	CAO	500-300 ohms w/211 term	106649	R-600	7	1	9
R-601	RESISTOR, fixed: ww; 10 ohms ± 10%; 15 w continuous open rating; approx 2" lg x 1/2" diam x 9/32" ID o/a; less terms; vitreous enamel; two solder lug terminals 3/8" lg; stamped "10"	Governed motor series resistor	N17-T-350010-740	CAO	10 ohm "0" size #211 term	96781	R-601	3	0	0

TABLE 8-4. COMBINED PARTS AND SPARE PARTS LIST

PARTS										EQUIPMENT SPARE PARTS	
SYMBOL DESIG.	NAME OF PART AND DESCRIPTION	FUNCTION	JAN OR NAVY TYPE DESIG.	SIGNAL CORPS STANDARD NAVY, AIR FORCE STOCK NO.	MANUFACTURERS CODE	MANUFACTURERS DESIG.	TELETYPE PART NO.	ALL SYMBOL DESIGNATIONS INVOLVED	TOTAL NO. PER EQUIP.	BOX	QUAN
R-602	RESISTOR, fixed: ww; 500 ohms ±10%; 40 w continuous open rating; approx 3-7/16" lg x 3/4" diam less term; vitreous enamel coated; two leads stranded copper 1-1/2" lg tinned; stamped "500"	Governed motor series resistor		N16-R-69258-9706	CTT	70722	70722	R-602,R-603	6	0	0
R-603	Same as R-602	Governed motor voltage dropping resistor									
R-604	RESISTOR, fixed: ww; 300 ohms ±5%; 5.1 w at 40° C ambient temp; core approx 3-1/4" lg x 1-1/2" wd x 1/8" thk, excluding term; flexible fiber glass; two 11/16" lg x 1/16" diam wire term; mts by two #8-32 thd, 7/16" lg on slide ends	Governed motor shunt resistor		N16-R-64074-8004	CW	18AF 300 ohm	71853	R-604	3	0	0
R-700	Same as R-111	Current limiting resistor for tape feed out circuit									
R-701	RESISTOR, fixed: ww; 800 ohms; 20 w; body dimen 2" lg x 9/16" diam; vitreous enamel coated; two solder terminals 3/8" lg	Filter for S-800 and S-801		N16-R-70600-5455	CW	20 F	129255	R-701,R-1500	13	0	0
R-1500	Same as R-701	Distributor-transmitter clutch magnet voltage dropping resistor									
R-1501	RESISTOR, fixed: ww; 1,000 ohms ±10% 10 w; approx 1-3/4" lg x 5/16" OD x 1/8" ID; vitreous enamel; mts by two lug terms; mts by ID; "1000" stamped on side	Distributor-transmitter manual and end of tape contacts series resistor		N16-R-66034-2096	CAO	#Z w/type 211 term	111647	R-1501	9	1	6
S-104	SWITCH, toggle: SPST	Selects for polar or neutral operation	ST-13-A	N17-S-70777-8601	CHH	82301BS	118734	S-104,S-206 S-401,S-701	21	0	0
S-201	SWITCH, lever: two position locking; position #1—1AID, position #2—2A1B2C; 3 amp 120 v DC; aluminum body; body dimen 3-3/16" lg x 3/4" wd x 1-3/8" h; 13/16" lg x 31/32" wd lever handle w/#6-32 thd stud; solder lug terminal; four #3-48 holes on 13/16" x 17/32" mtg/c	Switch lever		3Z9580-60 N17-S-55871-9401	CAU	PP-1901-1	128604	S-201	4	0	0

S-202	SWITCH, lever: one position locking; cont arrangement 3C; 3 amp, 120 v DC; aluminum body; body dimen 3-3/16" lg x 3/4" wd x 1-15/32" h; 13/16" lg x 31/32" wd lever handle w/#6-32 thd stud; solder lug term; four #3-48 thd holes on 17/32" x 13/16" mtg/c	Switch lever		N17-S-54081-2026	CAU	LK-12A-3A	128605	S-202	4	0	0
S-206	Same as S-104	Selects for number or number delete									
S-301	SWITCH, lever: two position locking; position #1—1D position, #2—2B; steel; body dimen 2-15/32" lg x 11/16" wd x 15/16" h; 5/16" diam x 27/32" lg bakelite bat type handle; solder lug terminals; mts by 15/32"-32 threaded shank 13/64" lg	Circuit 1 transmitter lock switch		N17-S-54194-5272	CBIM	6S-1173	129596	S-301,S-302 S-303	3	0	0
S-302	Same as S-301	Circuit 2 transmitter lock switch									
S-303	Same as S-301	Circuit 3 transmitter lock switch									
S-401	Same as S-104	Operates the reeling machine motor (B-401)									
S-501	SWITCH, toggle: DPST	Operates PP-987/U	ST-50-K	3Z9863-50K N17-S-72828-2596 3360-395853550	CAE	8822K5	118688	S-501,S-2000	5	0	0
S-700	RING, collector: brass ring; bakelite plate, steel, cad pl bracket; all parts riveted together, terminal plate on ea side; approx 13/16" lg x 1-1/4" wd x 2-7/8" h o/a; mts by tapped hole near ea end of bracket	Provides a switch for synchronous motor winding		N17-T-350009-212	CTT	82841	82841	S-700	10	0	0
S-701	Same as S-104	On-Off switch for reperforator									
S-702	SWITCH, push: bakelite body w/nickel pl brass shell; 110-220 v;body dimen 1-15/16" lg x 1" diam o/a; mts by std 1/2" conduit lock nut; high voltage ins	Switch for tape feed out		N17-S-56409-8338 3360-073012670	CIK	850	115322	S-702,S-1901 S-1902,S-1903 S-1904,S-2001	9	0	0
S-800	SWITCH, sensitive: SPDT; 10 amps, 125 v AC; bakelite case; approx 1-7/16" lg x 15/16" wd x 9/32" h o/a; plunger actuated; six oz operating pressure; 0.007" movement differential; 0.040" max pretravel; 0.025" max overtravel; momentary action; solder lug terms; four 3/32" diam mtg holes on 1" x 5/8" mtg	Operates L-800		N17-S-69215-8093 3360-073410-430	CATK	IMD12AXX	151329	S-800,S-801	8	0	0

TABLE 8-4. COMBINED PARTS AND SPARE PARTS LIST

PARTS										EQUIPMENT SPARE PARTS	
SYMBOL DESIG.	NAME OF PART AND DESCRIPTION	FUNCTION	JAN OR NAVY TYPE DESIG.	SIGNAL CORPS STANDARD NAVY, AIR FORCE STOCK NO.	MANUFACTURERS CODE	MANUFACTURERS DESIG.	TELETYPE PART NO.	ALL SYMBOL DESIGNATIONS INVOLVED	TOTAL NO. PER EQUIP.	BOX	QUAN
S-801	Same as S-800	Operates L-801 and L-802									
S-1500	SWITCH, toggle: DPST; 6 amp 250 v DC and AC; bakelite; approx 1-7/8" lg x 53/64" wd x 1-7/8" h o/a; 21/32" lg bat type handle; screw type term; single hole mtg bushing 15/32"-32, 15/32" lg; "ON" and "OFF" engraved on body	On-Off switch for MT-1372/FGC-38, MT-1373/FGC-38X and MT-1374/FGC-39		N17-S-73304-4418	CAE	7320K-3	111811	S-1500, S-1700 S-1905	4	0	0
S-1700	Same as S-1500	On-Off switch for message transmitter bases									
S-1800	SWITCH, sensitive: SPDT; 6 amps, 125 v AC; phenolic body; approx 2-1/8" lg x 7/16" wd x 3/8" h o/a; plunger actuated; momentary action; solder lug terms, silver contacts; two 1/8" diam mtg holes 1-3/4" c to c	Energizes K-1800		3Z9823-43 N17-S-53982-6316	Cherry Chandler Corp 2001		129323	S-1800, S-1801	6	1	3
S-1801	Same as S-1800	Energizes K-1800 and L-1800									
S-1901	Same as S-702	Left side front panel open line alarm reset button									
S-1902	Same as S-702	Left side rear panel open line alarm reset button									
S-1903	Same as S-702	Right side rear panel open line alarm reset button									
S-1904	Same as S-702	Right side front panel open line alarm reset button									
S-1905	Same as S-1500	Rectifier power On-Off switch									
S-2000	Same as S-501	Rectifier On-Off switch									
S-2001	Same as S-702	Open line alarm reset button									
S-2002	SWITCH, toggle: DPDT	Front panel number-delete switch for circuit 1	ST-52-R	N17-S-73956-7205	CAE	8831K5	128896	S-2002, S-2003 S-2004	3	0	0

S-2003	Same as S-2002	Front panel number-delete switch for circuit 2										0	0
S-2004	Same as S-2002	Front panel number-delete switch for circuit 3										0	0
T-501	TRANSFORMER: plate type; input 115 v, 60 cycles, single ph; two output windings; secd #1, 175 v at 2 amps, tapped at 2.5 v, 5 v, 7.5 v, 10 v, 150 v, and 162.5 v; secd #2, 204 v at 0.090 amp CT; 1500 v ins; sealed metal case; approx 6" lg x 4-3/4" wd x 6-1/2" h o/a excluding term and mtg studs; 13 stud term bottom of case; mts by four 1/4"-20 terminals	Increase line voltage	229613.807 3340-063902150	CAIU	T-1391-A	129390	T-501	2	0	0			
W-301	CABLE ASSEMBLY, special purpose: two #20 AWG stranded copper cond; polyvinyl chloride ins covered w/lacquered cotton braid, color coded; covered w/blk vinyl plastic tubing, tied es end w/#6 lacing twine; 1/4" diam o/a; approx 5" lg excluding termination; cinch #P3020CT plug one end, other end skinned, twisted and tinned	Connects to tape container switch	*2	CTT	128351	128351	W-301	1	0	0			
W-302	CABLE ASSEMBLY, special purpose: vinyl ins, lacquered cotton braid covered; 63 conductors #22 AWG stranded copper; bound w/#6 lacing twine, covered w/vinyl plastic tubing; approx 135-1/2" lg o/a; all leads skinned, twisted and tinned; color coded	Wireway cable	3B4002.345 N17-T-350016-559	CTT	128348	128348	W-302	1	0	0			
W-303	CABLE ASSEMBLY, special purpose: vinyl ins, lacquered cotton braid covered; 17 cond #14 AWG stranded copper, 15 cond #18 AWG stranded copper; bound w/#6 lacing twine, covered w/vinyl plastic tubing, joints bound w/scotch electrical tape; approx 140" lg, w/11 multiple lead breakouts; 12 CTT #82474 term, 8 CTT #10798 term, 36 CTT #114824 term, all other leads skinned, twisted and tinned; color coded	Wireway cable	*1	CTT	128349	128349	W-303	1	0	0			

*1 Low Failure item if required requisition from ESO referencing NavShips 900,180A

*2 Assemble from Component parts

TABLE 8-4. COMBINED PARTS AND SPARE PARTS LIST

PARTS

SYMBOL DESIG.	NAME OF PART AND DESCRIPTION	FUNCTION	JAN OR NAVY TYPE DESIG.	SIGNAL CORPS STANDARD NAVY, AIR FORCE STOCK NO.	MANUFACTURERS		TELETYPE PART NO.	ALL SYMBOL DESIGNATIONS INVOLVED	TOTAL NO. PER EQUIP.	EQUIPMENT SPARE PARTS	
					CODE	DESIG.				BOX	QUAN
W-304	CABLE ASSEMBLY, special purpose: polyvinyl chloride ins, lacquered cotton braid covered; 27 cond #22 AWG stranded copper; bound w/#6 lacing twine, covered w/scotch electrical tape; approx 57" lg o/a; 14 CTT #82474 terms, all other leads skinned, twisted, and tinned; color coded	Front panel cable		*3	CTT	128368	128368	W-304	1	0	0
W-401	CABLE ASSEMBLY, power: underwriters type SJ; three #18 AWG stranded cond; 57-3/4" lg excluding terminations; terminated by CHU #7309 cord-grip cap one end, CTT #4851 soldered to green lead other end	Connects B-401 to P-401	Sig C Spec 71-4945	*2	CTT	126990	126990	W-401	3	0	0
W-600	CABLE ASSEMBLY, special purpose: polyvinyl chloride, cotton braided; five cond #18 AWG stranded copper; tied w/#6 lacing twine; approx 12" lg o/a; color coded; all leads skinned, twisted and tinned	Governed motor power cable		N17-T-350011-851	CTT	106896	106896	W-600	7	0	0
W-601	CABLE ASSEMBLY, special purpose: vinyl ins, lacquered cotton braid covered; two cond #18 AWG stranded copper; bound w/#6 lacing twine; approx 11-3/4" lg o/a; 2 CTT #82474 term one end, other end skinned, twisted and tinned; color coded	Governed motor reperforator filter cable		N17-T-350004-636	CTT	110978	110978	W-601	10	0	0
W-602	CABLE ASSEMBLY, special purpose: governor circuit cable; vinyl ins, lacquered cotton braid covered; five cond #18 AWG stranded copper; bound w/#6 lacing twine; four leads covered w/vinyl plastic tubing; approx 19" lg o/a; 8 CTT #82474 term, all other leads skinned, twisted and tinned; color coded	Governed motor base filter assembly cable		N17-T-350004-637	CTT	110979	110979	W-602	3	0	0
W-700	CABLE ASSEMBLY, power: underwriters type SJ; three #18 AWG stranded cond; approx 54" lg excluding terminations; terminated one end by Hubbell #9750, other end terminated by 3 CTT #82474 terminals	Reperforator power cable		*2	CTT	117590	117590	W-700	7	0	0

W-701	CABLE ASSEMBLY, special purpose: sync motor cable; one cond #18 AWG stranded copper, eight cond #20 AWG stranded copper; vinyl ins, covered w/lacquered cotton braid, bound w/scotch electrical tape 3/4" wd near one end; bound w/#6 lacing twine, covered w/vinyl plastic tubing; approx 45" lg o/a; 9 CTT #82474 terms, all other leads skinned, twisted and tinned; color coded; used w/CTT #129209 connector, male	Reperforator control cable	*2	CTT	129253	129253	W-701	7	0 0
W-702	CABLE ASSEMBLY, special purpose: polyvinyl chloride ins, cotton braid covered; three cond #18 AWG stranded copper, 18 cond #22 AWG stranded copper; cond bound w/#6 lacing twine, plastic sleeving one end, wrapped w/tape two places; approx 35" lg o/a; 13 leads terminated by CTT #82474 term, all other leads skinned and tinned; color coded	Connects S-700, S-701, S-801, S-802, R-700, R-701, C-700 and J-700 to TB-700	3B4020.179 N17-T-350016-375	CTT	129233	129233	W-702	7	0 0
W-703	CABLE ASSEMBLY, special purpose: polyvinyl chloride ins, cotton braid; three cond #18 AWG and four cond #20 AWG stranded copper; covered w/scotch electrical tape and bound w/#6 lacing twine; 5'9" lg o/a; Teletype part/dwg #82474 term, eight places; color coded	Connects S-700, S-801, S-802, R-700, R-701, C-700 and J-700 to TB-700	*3	CTT	126985	126985	W-703	7	0 0
W-704	CABLE ASSEMBLY, power: underwriters type SJ; three #18 AWG stranded cond; approx 54" lg excluding terminations; terminated one end by 3 CTT #82474 terms, other end skinned, twisted and tinned	Connects TB-700 to P-700	G15-G-10425	CTT	117591	117591	W-704	7	0 0
W-1300	CABLE ASSEMBLY, special purpose: 11 cond #22 AWG stranded copper, bound w/#6 lacing twine; lacquered cotton braid covered; approx 21" lg o/a; 4 CTT #82474 term, all other leads skinned, twisted and tinned; color coded	Connects E-1322, E-1324 and E-1325 to E-1300 and E-1302	3B4020.181 N17-T-350016-603	CTT	129285	129285	W-1300	9	0 0
W-1301	CABLE ASSEMBLY, special purpose: 11 cond #22 AWG stranded copper, bound w/#6 lacing twine; lacquered cotton braid covered; approx 16" lg o/a; 4 CTT #82474 term, all other leads skinned, twisted and tinned; color coded	Connects C-1300, C-1301 and E-1302 to E-1300 and E-1302	3B4020.178 N17-T-350016-574	CTT	129286	129286	W-1301	3	0 0

*2 Assemble from Component parts

*3 Shop Manufacture

TABLE 8-4. COMBINED PARTS AND SPARE PARTS LIST

PARTS										EQUIPMENT SPARE PARTS	
SYMBOL DESIG.	NAME OF PART AND DESCRIPTION	FUNCTION	JAN OR NAVY TYPE DESIG.	SIGNAL CORPS STANDARD NAVY, AIR FORCE STOCK NO.	MANUFACTURERS CODE	MANUFACTURERS DESIG.	TELETYPE PART NO.	ALL SYMBOL DESIGNATIONS INVOLVED	TOTAL NO. PER EQUIP.	BOX	QUAN
W-1500	CABLE ASSEMBLY, special purpose: power cable; used w/CTT #102898 connector; vinyl ins, lacquered cotton braid covered; three cond #18 AWG stranded copper, bound w/plastic tubing 40" lg; approx 45" lg o/a; 3 CTT #82474 term, all other leads skinned, twisted and tinned; color coded	Power cable for message base		*3	CTT	118138	118138	W-1500,W-1700	3	0	0
W-1501	CABLE ASSEMBLY, special purpose: vinyl ins, cotton braid covered; 29 cond #22 AWG stranded copper; tied w/#6 lacing twine; approx 50" lg o/a; 25 leads terminated by CTT #129210 connector, two leads terminated by CTT #82474 term, all other leads skinned, twisted and tinned; color coded	Signal cable for message base		3E4020.183 N17-T-350016-337	CTT	129319	129319	W-1501	1	0	0
W-1502	CABLE ASSEMBLY, special purpose: polyvinyl chloride ins, lacquered cotton braid covered; four cond #20 AWG stranded copper; tied w/#6 lacing twine; approx 18" lg o/a; terminated one end w/CTT #82474 terminals other end skinned, twisted and tinned; color coded	Interconnecting cable for message base		*3	CTT	129317	129317	W-1502,W-1702	3	0	0
W-1700	Same as W-1500	Power cable for number base									
W-1701	CABLE ASSEMBLY, special purpose: polyvinyl chloride ins, cotton braid covered; 35 cond #22 AWG stranded copper; tied w/#6 lacing twine, 37" lg of sleeving on connector breakout; approx 50" lg o/a; 26 leads terminated by CTT #129210 connector, two leads terminated by CTT #82474 terms, all other leads skinned, twisted and tinned; color coded	Signal cable for number base		3E4002.327 N17-T-350016-336	CTT	129318	129318	W-1701	2	0	0
W-1702	Same as W-1502	Interconnecting cable for number base									

W-1801	CABLE ASSEMBLY, special purpose: two cond SJ cord and two cond shielded cable; four cond #18 AWG stranded copper; covered by 1/2" plastic tubing; approx 61" lg o/a; terminated one end by Hubbell #7251 plug, two IBM #75819 terms on shield cond other end, SJ cord skinned; color coded	Cable for MX-1527/U	*1	CYG	12138-S40		W-1801	3	0	0
W-1900	CABLE ASSEMBLY, special purpose: two #20 AWG stranded copper cord; polyvinyl chloride ins covered w/lacquered cotton braid, color coded; covered w/blk vinyl plastic tubing; tied ea end w/#6 lacing twine, 1/4" diam o/a; approx 10-1/2" lg excluding termination; Cinch #P302CCT lug one end, other end skinned, twisted and tinned	Connects to tape container switch	*2	CTT	128629	128629	W-1900	1	0	0
W-1901	CABLE ASSEMBLY, special purpose: vinyl ins, lacquered cotton braid covered; 89 cond #22 AWG stranded copper, 12 cond #18 AWG stranded copper; bound w/#6 lacing twine, w/scotch electrical tape; approx 10 ft lg o/a; 22 CTT #82474 term, all other leads skinned, twisted and tinned; color coded	Wireway cable	4T128597 N17-T-350016-560	CTT	128597	128597	W-1901	4	0	0
W-1902	CABLE ASSEMBLY, special purpose: vinyl ins, lacquered cotton braid covered; 77 cond #14 AWG stranded copper, 36 cond #18 AWG; bound w/#6 lacing twine covered w/vinyl plastic tubing; approx 125" lg o/a; 22 CTT #82474 terms, all other leads skinned, twisted and tinned; color coded	Wireway cable	4BE4020.177 N17-T-350016-562	CTT	128598	128598	W-1902	4	0	0
W-1903	CABLE ASSEMBLY, special purpose: vinyl ins, lacquered cotton braid covered; 17 cond #14 AWG stranded copper, nine cond #18 AWG stranded copper; bound w/#6 lacing twine, covered w/vinyl plastic tubing; approx 141" lg o/a: 46 CTT #114824 term, 3 CTT #107398 term, all other leads skinned, twisted and tinned; color coded	Wireway cable	4T128599 N17-T-350016-561	CTT	128599	128599	W-1903	4	0	0

*1 Low Failure item if required requisition from ESO referencing NavShips 900,180A

*2 Assemble from Component parts

*3 Shop Manufacture

TABLE 8-4. COMBINED PARTS AND SPARE PARTS LIST

PARTS

SYMBOL DESIG.	NAME OF PART AND DESCRIPTION	FUNCTION	JAN OR NAVY TYPE DESIG.	SIGNAL CORPS STANDARD NAVY, AIR FORCE STOCK NO.	MANUFACTURERS CODE	MANUFACTURERS DESIG.	TELETYPE PART NO.	ALL SYMBOL DESIGNATIONS INVOLVED	TOTAL NO. PER EQUIP.	EQUIPMENT SPARE PARTS BOX	EQUIPMENT SPARE PARTS QUAN
W-1904	CABLE ASSEMBLY, special purpose: vinyl ins, lacquered cotton braid covered; 14 cond #14 AWG stranded copper, six cond #18 AWG stranded copper; bound w/#6 lacing twine, w/scotch electrical tape; approx 132" lg o/a; 13 CTT #82474 term, 24 CTT #107398 term, all other leads skinned, twisted and tinned; color coded	Wireway cable		*3	CTT	128669	128669	W-1904	1	0	0
W-1905	CORD ASSEMBLY: two tinsel conductors; waterproof red rubber ins; red glazed cotton outercord; approx 12" lg excluding plugs; WECO plug #347A ea end	Wireway cable		*2	CTT	128751	128751	W-1905	1	0	0
W-2001	CABLE ASSEMBLY, special purpose: vinyl ins, lacquered cotton braid covered; 17 cond #14 AWG stranded copper, seven cond #18 AWG stranded copper; bound w/#6 lacing twine, covered w/vinyl plastic tubing; approx 70" lg o/a; w/10 multiple lead breakouts; 41 CTT #114824 terminals, 3 CTT #107398 terminals, all other leads skinned, twisted and tinned; color coded	Wireway cable		*2	CTT	128606	128606	W-2001	1	0	0
W-2002	CABLE ASSEMBLY, special purpose: vinyl ins, covered w/lacquered cotton braid; six cond #18 AWG stranded copper, 152 cond #20 AWG stranded copper; bound w/#6 lacing twine, covered w/plastic sleeving, w/scotch electrical tape five places; approx 129-3/4" o/a; one leg 15" lg w/156 leads; 31 #82474 CTT terminals, all other leads skinned, twisted and tinned; color coded	Control cable		3E4020.180 N17-T-350016-558	CTT	128924	128924	W-2002	1	0	0
W-2003	CABLE ASSEMBLY, special purpose: vinyl ins, covered w/lacquered cotton braid; three cond #18 AWG stranded copper, 129 cond #22 AWG stranded copper; bound w/#6 lacing twine; approx 72-1/2" lg o/a; leads skinned, twisted and tinned; color coded	Wireway cable		3E4002.346 N17-T-350016-557	CTT	128925	128925	W-2003	1	0	0

Z-101	FILTER UNIT: five capacitors and two resistors in potted case; 600 v DC; rectangular bathtub case; approx 3-19/32" lg x 2-1/2" wd x 1-3/8" h o/a; two mtg ears w/round hole in ea; terminals numbered; seven solder lug terminals	Filter for receiving line and K-106 spacing contacts	3Z1892-82 N17-T-350015-959	CIE	4689FW	152109	Z-101	4	0	0
Z-201	SUPPRESSOR, electrical noise: resistor, capacitor and coil type; approx 3-3/4" lg x 1-7/8" h x 1-3/8" o/a; 200 v DC; rectangular metal base; mts by bracket; three standoff lead terminals and three wire lead terminals; potted w/wax	Transmitting line filter	3Z1892-87.1 N17-S-51011-1001	CIE	4810	128610	Z-201	3	0	0
Z-301	SUPPRESSOR, electrical noise: capacitor and coil type; 8-5/16" lg x 3-3/8" wd x 1-11/16" h o/a; 20 amp, 125-250 v AC or DC; rectangular metal case; four slotted mtg holes	Monitor cabinet AC power RF filter	N17-S-50951-1176 3330-058750026	CTD	1403-1-A	128350	Z-301,Z-1901 Z-2001	3	0	0
Z-1300	SUPPRESSOR, electrical noise: capacitor and coil; approx 5-3/4" h x 1-5/8" lg x 1-3/8" wd o/a; 1-1/4 amp, 120 v DC; uncased; mts by bracket; one pigtail and two wire tab terminals	Filter for distributor-transmitter	3Z1892-87 N17-T-350016-373	CTT	114319	114319	Z-1300	9	0	0
Z-1800	SUPPRESSOR, electrical noise: resistor and capacitor type; 9/16" diam x 1-7/8" lg; 400 v DC; tubular metal case; two wire lead type term, one 2-1/8" lg and other 2-5/8" lg	Filter for K-1800	N17-T-350016-618	CTD	XN-254	129324	Z-1800	3	0	0
Z-1901	Same as Z-301	Receiver cabinet AC power RF filter								
Z-2001	Same as Z-301	Transmitter cabinet AC power RF filter								
CR-501	RECTIFIER: selenium; max input 182 v 60 cycles per leg; max output 140 v DC, 2 amps; rectangular 7-5/8" lg x 4-1/16" wd x 3" h o/a; mts by stud ea end w/5/16"-18 thd; three terminals extend 1-1/16" beyond flange	Rectifies AC to DC for neutral operation	N17-R-51404-4602	CBGB	6826-7D1 AG	129386	CR-501,CR-502	4	0	0
CR-502	Same as CR-501	Rectifies AC to DC for neutral operation								

*2 Assemble from Component parts

*3 Shop Manufacture

TABLE 8-4. COMBINED PARTS AND SPARE PARTS LIST

PARTS									EQUIPMENT SPARE PARTS	
SYMBOL DESIG.	NAME OF PART AND DESCRIPTION	FUNCTION	JAN OR NAVY TYPE DESIG.	SIGNAL CORPS STANDARD NAVY, AIR FORCE STOCK NO.	MANUFACTURERS CODE	MANUFACTURERS DESIG.	TELETYPE PART NO.	ALL SYMBOL DESIGNATIONS INVOLVED	TOTAL NO. PER EQUIP.	BOX	QUAN
CR-503	VARISTOR: selenium; input 234 v AC per leg, 60 cycles; output 190 v DC max, 0.15 amp; rectangular, 5-1/4" lg x 1" wd x 1-1/2" h o/a; mts by stud ea end w/#8-32 thd; three terminals extend 1/2" beyond flange	Rectifies AC to DC for polar operation		N17-R-51429-9813 3370-679750-1121	CBGB	2S26-9C1AG	129387	CR-503	2	0	0
MS-1800	PAD, printer: cork, Armstrong grade #1443; approx 2-5/32" lg x 1-27/32" wd x 3/16" thk o/a; mts by body	Stamping block for RX-1527/U		6M688-11 N17-T-350016-322	CYG	60925	128283	MS-1800	3	1	3
TB-301	BOARD, terminal: binding post strip; 120 solder lug terminals, six rows 20 terminals per row; fiber board; approx 6-31/32" lg x 2-19/32" wd x 3-11/16" h o/a; mts by four 3/16" holes, two ea end of base 1-3/8" c to c	Monitor cabinet power connector		N17-B-78351-8211	CW	187-C-FIBER	102596	TB-301	1	0	0
TB-302	BOARD, terminal: six screw type terminal; barrier type terminal; bakelite; approx 4-11/32" lg x 5/8" h o/a; four mtg holes	Terminal board for monitor cabinet		N17-B-77741-8835	CJC	6-142	103241	TB-302	1	0	0
TB-501	BOARD, terminal: general purpose binding post strip; six screw type terminal; 3/8" between terminals w/barrier; bakelite; 13/32" h x 1-3/64" wd x 2-7/8" lg o/a	Power supply PP-987/0 power connector terminal board		N17-B-77738-2799	CJC	6-140-3/4W	129442	TB-501	2	0	0
TB-502	BOARD, terminal: general purpose binding post strip; eight screw type terminal; 3/8" between terminal w/barrier; bakelite; 23/32" h x 7/8" wd x 3-5/8" lg o/a	Adjustment terminal board		N17-B-77840-1659	CJC	8-140-Y	129441	TB-502	2	0	0
TB-601	BOARD, assembly: terminal end; c/o CTT #70708 base plate, #2402 terminal, #2401 rivet; phenolic base, solder lug terminal; approx 1-1/2" lg x 1" wd x 3/16" h o/a; two 1/8" mtg holes	Terminal board for W-602		N17-T-350009-759	CTT	89925	89925	TB-601	6	0	0
TB-700	BOARD, terminal: general purpose binding post strip; 12 screw type terminals; 3/8" between terminal w/barrier; molded phenolic board; approx 5-5/32" lg x 7/8" wd x 13/32" h o/a; mts by four 5/32" holes, two ea end 5/16" c to c	Terminal board for reperforator cables		N17-B-77987-4697	CJC	12-140	111289	TB-700	7	0	0

TB-1500	BOARD, terminal: eight CTT #1028 brass screw terminals w/8 CTT #3650 washers; terminal ctrs approx 13/32" lg x 3/4" wd x 5/8" h o/a; blk bakelite; approx 3-13/32" lg x 3/4" wd x 5/8" h o/a; mtg hole ea end ctb to 11/32"	Terminal board for message base	N17-T-350007-849 8880-500651-4855	CTT	73670	73670	TB-1500	3	0
TB-1800	BOARD, terminal: three brass screw terminals; terminal 7/16" between ctrs w/barriers; bakelite board; approx 2-1/16" lg x 1-1/8" wd x 1/2" h o/a; two 3/16" diam mtg holes ea end on 27/64" x 1-3/4" mtg ctrs	Terminal board for MX-1527/U	*1	CYG	12138-S7		TB-1800	3	0
TB-1999	BOARD, terminal: 20 solder lug terminals; four rows of five ea row; wood board; 2-11/32" lg x 1-23/32" wd x 2-21/32" h o/a; mts by two #8-32 thd holes, 1-5/16" c to c	Terminal board on receiving cable for incoming lines	3Z770-20.111 N17-B-78137-3953	CW	195-D	128658	TB-1999	1	0
TB-2002	BOARD, terminal: binding post strip; two banks, 200 solder lug terminals, 10 rows 20 ea row; 1/8" apart; fiber board; approx 6-1/16" lg x 2-15/16" wd x 5-25/64" h o/a; mts by three #10-32 thd holes in slot of base	Terminal board for transmitter cabinet power connections	3Z770-200.2 N17-T-350016-564	CW	100-H	128659	TB-2002	1	0
XF-109	HOLDER, fuse: extractor post type; for one HKP 1-1/4" lg x 1/4" diam Buss cartridge fuse; bakelite base w/copper clips; 125 v, 1/2 amp; approx 11/16" across flats 2-1/4" lg o/a; 1/2"-20 SAE thd for panel mtg; two solder lug type terminals	Socket for F-109	N17-F-74267-5075	CFA	HKP	116783	XF-109,XF-209 XF-502	21	0
XF-209	Same as XF-109	Socket for F-209							
XF-303	HOLDER, fuse: block type; 10 Edison plug fuses; ceramic base; approx 8-1/16" lg x 3-7/8" wd x 2-1/16" thk o/a; mts by 10 body holes; 12 screw type terminals	Fuse block for monitor cabinet fuses	*1	CSZ	92011	128317	XF-303	1	0
XF-501	HOLDER, fuse: retainer type; five AG cartridge fuses; bakelite base w/copper clips; approx 1-5/8" lg x 1/4" wd x 11/16" h o/a; mts by csk ctr body hole; solder type terminals	Socket for F-501	3Z2878 N17-F-73772-1960 8800-030800	CFA	4574	118609	XF-501	14	0
XF-502	Same as XF-109	Sockets for F-501 through F-505							

*1 Low Failure item if required requisition from ESO referencing Navships 900,180A

TABLE 8-4. COMBINED PARTS AND SPARE PARTS LIST

PARTS

SYMBOL DESIG.	NAME OF PART AND DESCRIPTION	FUNCTION	JAN OR NAVY TYPE DESIG.	SIGNAL CORPS STANDARD NAVY, AIR FORCE STOCK NO.	MANUFACTURERS CODE	MANUFACTURERS DESIG.	TELETYPE PART NO.	ALL SYMBOL DESIGNATIONS INVOLVED	TOTAL NO. PER EQUIP.	EQUIPMENT SPARE PARTS BOX	EQUIPMENT SPARE PARTS QUAN
XF-1901	LAMPHOLDER: medium screw; ceramic body; 660 w, 250 v; approx 1-3/4" diam x 1-5/8" h o/a; mts in 1-3/8" diam hole by screw ring; asbestos ring, less unglazed screw ring and includes #3804 glazed screw ring	Sockets for F-1901 through F-1908		6Z8355-1 N17-L-51197-5351 7700-525786	CYD	400	124848	XF-1901 XF-2003	26	0	0
XF-2003	Same as XF-1901	Socket for F-2003									
XI-302	SOCKET, indicator light: w/o lens; double cont candelabra bayonet base T4-1/2 bulb; 125 v; enclosed shell; nickel pl shell; approx 2-1/4" lg x 1-1/4" diam o/a; mts by threaded portion; horiz mtd, lamp replaceable from front; w/o thd type jewel; two screw type terminals at base of socket; has 30,000 ohm series resistor	Socket for I-302		N17-L-51685-3895	CEJ	23.950-4	128912	XI-302 XI-1901 XI-2001	3	0	0
XI-501	SOCKET, lamp: blk nickel finish; 1-13/16" lg x 15/16" diam o/a; mts by shaft 11/16"-27 thd; built-in 180,000 ohm resistor	Socket for I-501		2Z5991-179 N17-L-76652-1301 7700-530055	CAYZ	812208	120206	XI-501	2	0	0
XI-1901	Same as XI-302	Socket for I-1903									
XI-2001	Same as XI-302	Socket for I-2001									
XK-106	BLOCK ASSEMBLY, connecting: includes CW #149618 contact springs and #241195 spring retainer; approx 2-1/32" lg x 2-31/64" wd x 1-25/32" h o/a; furnished w/mtg screws	Socket for K-106		N17-T-350005-987	CW	18-B	6827	XK-106,XK-201	8	0	0
XK-201	Same as XK-106	Socket for K-201									

TABLE 8-5. CROSS REFERENCE PARTS LIST

STANDARD NAVY STOCK NO.	KEY SYMBOL	STANDARD NAVY STOCK NO.	KEY SYMBOL	STANDARD NAVY STOCK NO.	KEY SYMBOL	STANDARD NAVY STOCK NO.	KEY SYMBOL	STANDARD NAVY STOCK NO.	KEY SYMBOL
G15-C-10425	W-704	N17-T-350001-473	H-1137	N17-T-350003-529	0-1376	N17-T-350004-686	A-1311	N17-T-350006-314	0-1175
G17-C-29120	E-2001	N17-T-350001-474	A-811	N17-T-350003-530	0-1375	N17-T-350004-687	H-1400	N17-T-350006-317	0-1367
G17-F-16302-100	F-504	N17-T-350001-477	0-624	N17-T-350003-532	0-1354	N17-T-350004-688	E-1319	N17-T-350006-326	0-1061
G17-L-6811-25	I-301	N17-T-350001-478	0-993	N17-T-350003-533	0-1356	N17-T-350004-693	H-1196	N17-T-350006-356	0-997
G43-N-10714-150	H-1677	N17-T-350001-480	0-990	N17-T-350003-534	0-1347	N17-T-350004-694	H-410	N17-T-350006-362	0-1524
G43-S-15519	H-1228	N17-T-350001-483	H-1149	N17-T-350003-537	A-1327	N17-T-350004-695	H-1199	N17-T-350006-363	0-1076
N16-C-20490-1061	C-501	N17-T-350001-484	0-933	N17-T-350003-539	0-1304	N17-T-350004-759	H-981	N17-T-350006-364	0-1116
N16-C-42736-9799	C-201	N17-T-350001-485	0-951	N17-T-350003-540	A-1314	N17-T-350004-786	0-1355	N17-T-350006-367	0-962
N16-C-42947-5955	C-603	N17-T-350001-486	0-953	N17-T-350003-541	A-1305	N17-T-350004-826	H-1276	N17-T-350006-370	0-621
N16-C-45797-5901	C-601	N17-T-350001-487	0-984	N17-T-350003-542	0-1307	N17-T-350004-861	H-751	N17-T-350006-379	0-1187
N16-C-45814-9190	C-204	N17-T-350001-488	0-974	N17-T-350003-543	H-1339	N17-T-350004-868	H-600	N17-T-350006-380	0-1019
N16-C-47329-8406	C-700	N17-T-350001-489	0-985	N17-T-350003-544	H-1320	N17-T-350004-869	H-684	N17-T-350006-381	0-955
N16-R-28916-6917	L-501	N17-T-350001-490	0-972	N17-T-350003-546	A-1322	N17-T-350004-873	H-1108	N17-T-350006-382	0-968
N16-R-43510-7374	R-202	N17-T-350001-491	0-972	N17-T-350003-547	0-1387	N17-T-350004-876	0-849	N17-T-350006-383	0-971
N16-R-50337-726	R-501	N17-T-350001-493	A-816	N17-T-350003-548	A-1324	N17-T-350004-935	0-1120	N17-T-350006-384	0-965
N16-R-50634-726	R-502	N17-T-350001-494	0-959	N17-T-350003-549	0-1392	N17-T-350004-936	A-829	N17-T-350006-393	0-1095
N16-R-64074-8004	R-604	N17-T-350001-495	0-963	N17-T-350003-557	A-1503	N17-T-350004-937	H-1103	N17-T-350006-394	0-1129
N16-R-65886-7286	R-201	N17-T-350001-503	0-943	N17-T-350003-558	H-1606	N17-T-350004-938	A-831	N17-T-350006-395	0-1002
N16-R-66034-2096	R-1501	N17-T-350001-504	0-956	N17-T-350003-592	0-1302	N17-T-350004-939	H-1155	N17-T-350006-397	0-431
N16-R-66034-4821	R-205	N17-T-350001-508	0-1221	N17-T-350003-601	0-934	N17-T-350004-940	0-1152	N17-T-350006-400	0-911
N16-R-66080-5618	R-111	N17-T-350001-529	0-1346	N17-T-350003-602	H-883	N17-T-350004-941	0-1151	N17-T-350006-401	0-817
N16-R-66102-6251	R-102	N17-T-350001-534	0-1390	N17-T-350003-630	0-1535	N17-T-350004-942	0-1156	N17-T-350006-408	0-1906
N16-R-70503-1381	R-108	N17-T-350001-535	0-961	N17-T-350003-647	0-1314	N17-T-350004-943	H-1160	N17-T-350006-415	0-1035
N16-R-70600-5455	R-701	N17-T-350001-537	0-1127	N17-T-350003-654	0-914	N17-T-350004-945	H-1341	N17-T-350006-416	0-1025
N16-R-70681-4326	R-109	N17-T-350001-538	0-1128	N17-T-350003-662	0-1352	N17-T-350004-989	A-830	N17-T-350006-417	0-1186
N16-R-90935-9205	R-207	N17-T-350001-545	A-800	N17-T-350003-680	0-1080	N17-T-350004-995	0-1031	N17-T-350006-432	0-1018
N16-W-80001-375	H-1989	N17-T-350001-549	0-939	N17-T-350003-704	H-324	N17-T-350004-996	0-1027	N17-T-350006-471	0-1353
N17-B-77738-2799	TB-501	N17-T-350001-552	0-808	N17-T-350003-708	A-828	N17-T-350005-184	H-490	N17-T-350006-478	0-973
N17-B-77741-8835	TB-302	N17-T-350001-637	0-1003	N17-T-350003-721	0-845	N17-T-350005-200	0-912	N17-T-350006-483	0-1921
N17-B-77840-1659	TB-502	N17-T-350001-659	0-801	N17-T-350003-722	0-840	N17-T-350005-391	0-1079	N17-T-350006-485	0-1372
N17-B-77987-4697	TB-700	N17-T-350001-662	0-1034	N17-T-350003-725	0-830	N17-T-350005-442	H-888	N17-T-350006-497	0-615
N17-B-78137-3953	TB-1999	N17-T-350001-664	0-1017	N17-T-350003-726	0-834	N17-T-350005-445	L-800	N17-T-350006-498	0-614
N17-B-78351-8211	TB-301	N17-T-350001-678	0-1022	N17-T-350003-727	0-823	N17-T-350005-479	0-995	N17-T-350006-499	0-1007
N17-C-64204-8719	L-1302	N17-T-350001-689	H-906	N17-T-350003-728	0-827	N17-T-350005-507	H-1659	N17-T-350006-500	0-1358
N17-C-71186-6280	P-502	N17-T-350001-691	0-925	N17-T-350003-729	0-831	N17-T-350005-509	H-1121	N17-T-350006-509	0-706
N17-C-71427-6126	P-301	N17-T-350001-731	0-1184	N17-T-350003-732	0-822	N17-T-350005-512	H-1562	N17-T-350006-527	E-305
N17-C-71459-8512	P-501	N17-T-350001-788	H-1577	N17-T-350003-733	0-825	N17-T-350005-515	H-672	N17-T-350006-550	0-1305
N17-C-71459-8575	P-1500	N17-T-350001-790	0-966	N17-T-350003-734	0-835	N17-T-350005-524	H-922	N17-T-350006-556	0-704
N17-C-71593-7581	P-701	N17-T-350001-795	H-926	N17-T-350003-736	0-824	N17-T-350005-532	H-317	N17-T-350006-558	E-307
N17-C-71634-3668	P-101	N17-T-350001-801	0-1123	N17-T-350003-737	0-837	N17-T-350005-535	H-1211	N17-T-350006-604	0-1177
N17-C-71640-2351	P-1501	N17-T-350001-802	H-1051	N17-T-350003-738	0-820	N17-T-350005-548	H-407	N17-T-350006-617	0-1008
N17-C-72645-4192	J-1904	N17-T-350001-829	H-736	N17-T-350003-741	0-826	N17-T-350005-555	H-1688	N17-T-350006-627	0-1157
N17-C-72650-3704	J-318	N17-T-350001-869	H-1917	N17-T-350003-742	0-843	N17-T-350005-561	H-302	N17-T-350006-633	0-1118
N17-C-73124-6696	J-700	N17-T-350001-961	H-731	N17-T-350003-743	0-829	N17-T-350005-579	0-1411	N17-T-350006-634	0-1153
N17-C-73173-8501	J-2009	N17-T-350001-968	0-937	N17-T-350003-744	0-841	N17-T-350005-598	H-708	N17-T-350006-638	0-1121
N17-C-73182-1478	J-1901	N17-T-350001-976	H-1020	N17-T-350003-745	0-833	N17-T-350005-610	0-998	N17-T-350006-654	0-1067
N17-C-73199-5839	J-311	N17-T-350001-982	H-1261	N17-T-350003-746	0-832	N17-T-350005-614	H-1537	N17-T-350006-655	E-1315
N17-C-73306-6125	J-307	N17-T-350001-985	B-700	N17-T-350003-747	0-839	N17-T-350005-622	H-403	N17-T-350006-656	E-1318
N17-C-73308-4021	J-108	N17-T-350002-103	0-932	N17-T-350003-748	0-836	N17-T-350005-691	H-715	N17-T-350006-657	E-1313
N17-C-73333-3739	E-2099	N17-T-350002-106	H-1273	N17-T-350003-756	0-821	N17-T-350005-698	0-618	N17-T-350006-658	E-1317
N17-C-73336-5301	J-105	N17-T-350002-107	E-620	N17-T-350003-757	0-828	N17-T-350005-710	H-1198	N17-T-350006-660	0-1327
N17-C-73336-8607	J-1905	N17-T-350002-108	E-613	N17-T-350003-759	0-838	N17-T-350005-714	H-1177	N17-T-350006-662	0-1539
N17-C-73480-6310	J-1942	N17-T-350002-109	E-614	N17-T-350003-776	0-881	N17-T-350005-715	H-411	N17-T-350006-683	0-991
N17-C-73747-3566	J-309	N17-T-350002-110	E-609	N17-T-350003-777	0-882	N17-T-350005-719	H-698	N17-T-350006-710	0-805
N17-C-73747-5904	J-301	N17-T-350002-112	A-611	N17-T-350003-779	0-883	N17-T-350005-723	H-460	N17-T-350006-718	0-812
N17-C-780913-901	E-1902	N17-T-350002-113	0-612	N17-T-350003-782	0-885	N17-T-350005-730	H-1212	N17-T-350006-720	A-801
N17-C-781108-951	H-1715	N17-T-350002-115	0-613	N17-T-350003-784	0-886	N17-T-350005-731	H-701	N17-T-350006-721	0-806
N17-F-14305-80	F-501	N17-T-350002-116	H-946	N17-T-350003-788	0-887	N17-T-350005-735	H-882	N17-T-350006-728	0-935
N17-F-16302-40	F-503	N17-T-350002-118	H-1641	N17-T-350003-791	0-888	N17-T-350005-740	H-1007	N17-T-350006-738	0-950
N17-F-16302-60	F-109	N17-T-350002-125	0-1217	N17-T-350003-792	0-889	N17-T-350005-741	H-1034	N17-T-350006-753	H-987
N17-F-16479-810	F-301	N17-T-350002-134	H-1115	N17-T-350003-795	0-890	N17-T-350005-747	H-741	N17-T-350006-840	H-486
N17-F-73772-1960	XF-501	N17-T-350002-227	H-1426	N17-T-350003-797	0-891	N17-T-350005-753	H-1182	N17-T-350006-849	H-480
N17-F-74267-5075	XF-109	N17-T-350002-228	H-1666	N17-T-350003-798	0-892	N17-T-350005-754	H-325	N17-T-350006-857	H-682
N17-I-64091-4045	E-102	N17-T-350002-231	A-607	N17-T-350003-799	0-893	N17-T-350005-760	H-707	N17-T-350006-870	H-494
N17-I-67017-9864	E-216	N17-T-350002-232	E-610	N17-T-350003-801	0-894	N17-T-350005-763	H-1018	N17-T-350006-873	H-738
N17-I-77259-4301	E-213	N17-T-350002-233	A-608	N17-T-350003-804	0-895	N17-T-350005-766	H-645	N17-T-350006-875	E-1308
N17-J-39218-6567	J-1911	N17-T-350002-234	A-605	N17-T-350003-805	0-896	N17-T-350005-768	H-641	N17-T-350006-878	A-308
N17-J-39231-4588	J-1917	N17-T-350002-235	A-609	N17-T-350003-807	0-897	N17-T-350005-769	H-647	N17-T-350006-900	H-1304
N17-J-39253-3043	J-216	N17-T-350002-237	H-887	N17-T-350003-810	0-898	N17-T-350005-771	H-915	N17-T-350006-908	H-867
N17-J-39408-9976	J-1935	N17-T-350002-257	H-419	N17-T-350003-812	0-899	N17-T-350005-772	0-1028	N17-T-350006-923	0-1345
N17-J-39597-3371	J-308	N17-T-350002-262	H-1397	N17-T-350003-813	0-900	N17-T-350005-773	H-863	N17-T-350006-948	H-428
N17-L-6806-130	I-501	N17-T-350002-279	H-1032	N17-T-350003-816	0-901	N17-T-350005-774	H-974	N17-T-350007-399	0-2106

N17-L-51197-5351	XF-1901	N17-T-35002-283	H-1578	N17-T-35003-819	0-903	N17-T-35005-775	0-714	N17-T-35007-446	0-1338
N17-L-51685-3895	XI-302	N17-T-35002-349	0-1051	N17-T-35003-822	0-904	N17-T-35005-782	H-1241	N17-T-35007-450	H-830
N17-L-76652-1301	XI-501	N17-T-35002-363	H-693	N17-T-35003-832	0-905	N17-T-35005-785	0-701	N17-T-35007-462	H-469
N17-L-76652-1401	XI-502	N17-T-35002-365	H-694	N17-T-35003-834	0-906	N17-T-35005-788	0-714	N17-T-35007-470	R-602
N17-L-250181-525	Y-1002	N17-T-35002-375	H-695	N17-T-35003-835	0-907	N17-T-35005-797	0-1005	N17-T-35007-471	E-628
N17-L-250681-1558	Z-2800	N17-T-35002-381	N-1500	N17-T-35003-836	0-908	N17-T-35005-799	0-1512	N17-T-35007-475	R-604
N17-L-250681-5376	Z-3000	N17-T-35002-393	H-693	N17-T-35003-837	0-879	N17-T-35005-802	H-1117	N17-T-35007-481	R-958
N17-M-51361-130	0-321	N17-T-35002-394	E-704	N17-T-35003-854	0-1163	N17-T-35005-804	E-623	N17-T-35007-485	H-1435
N17-R-51404-4602	CR-501	N17-T-35002-395	A-701	N17-T-35003-856	0-1162	N17-T-35005-805	0-705	N17-T-35007-491	A-818
N17-R-51429-9813	CR-503	N17-T-35002-479	0-1704	N17-T-35003-857	0-1161	N17-T-35005-809	E-1508	N17-T-35007-492	E-602
N17-R-64247-6841	K-104	N17-T-35002-483	H-1357	N17-T-35003-858	0-1359	N17-T-35005-816	E-103	N17-T-35007-493	E-704
N17-R-64335-3720	K-203	N17-T-35002-496	0-1125	N17-T-35003-868	A-616	N17-T-35005-817	E-1311	N17-T-35007-494	H-921
N17-R-64362-8046	K-1800	N17-T-35002-512	A-602	N17-T-35003-869	A-933	N17-T-35005-822	E-632	N17-T-35007-565	0-960
N17-R-64625-7271	K-105	N17-T-35002-569	E-1307	N17-T-35003-879	A-1377	N17-T-35005-858	E-604	N17-T-35007-567	0-800
N17-R-64646-4261	K-106	N17-T-35002-570	E-1305	N17-T-35003-889	0-1377	N17-T-35005-900	E-619	N17-T-35007-569	N-801
N17-R-64960-2657	K-202	N17-T-35002-602	E-1307	N17-T-35003-955	0-1377	N17-T-35005-901	B-800	N17-T-35007-570	N-802
N17-R-65044-2154	K-207	N17-T-35002-755	0-1667	N17-T-35003-969	0-846	N17-T-35005-916	E-309	N17-T-35007-584	0-804
N17-R-65198-6741	K-1800	N17-T-35002-783	H-1033	N17-T-35003-970	0-847	N17-T-35005-918	E-1907	N17-T-35007-585	0-803
N17-R-65677-8041	K-103	N17-T-35002-784	0-1071	N17-T-35003-971	0-1383	N17-T-35005-922	E-1309	N17-T-35007-586	0-1220
N17-S-50951-1176	C-1333	N17-T-35002-867	E-702	N17-T-35004-114	P-700	N17-T-35005-926	E-1310	N17-T-35007-587	P-2400
N17-S-51011-1001	Z-301	N17-T-35002-870	A-1521	N17-T-35004-139	0-1554	N17-T-35005-945	0-1500	N17-T-35007-593	0-1445
N17-S-51404-4618	Z-1800	N17-T-35002-871	A-1522	N17-T-35004-140	A-815	N17-T-35005-947	E-1351	N17-T-35007-604	0-608
N17-S-51404-4622	Z-2502	N17-T-35002-888	A-303	N17-T-35004-141	A-813	N17-T-35005-960	E-613	N17-T-35007-624	H-1455
N17-S-51429-9813	Z-2503	N17-T-35002-889	A-305	N17-T-35004-172	A-814	N17-T-35005-962	E-1312	N17-T-35007-639	H-1298
N17-S-51429-9813	Z-2504	N17-T-35002-890	A-307	N17-T-35004-186	H-1386	N17-T-35005-987	H-654	N17-T-35007-655	H-977
N17-S-51429-9813	Z-2505	N17-T-35002-905	0-703	N17-T-35004-196	0-813	N17-T-35005-990	XK-106	N17-T-35007-660	0-1011
N17-S-51429-9813	Z-2506	N17-T-35002-933	0-1064	N17-T-35004-199	0-814	N17-T-35006-108	0-942	N17-T-35007-663	H-1134
N17-S-51429-9813	Z-2507	N17-T-35002-942	H-1381	N17-T-35004-196	A-1319	N17-T-35006-115	0-936	N17-T-35007-664	H-989
N17-S-51429-9813	Z-2508	N17-T-35002-943	A-833	N17-T-35004-212	A-1323	N17-T-35006-155	0-417	N17-T-35007-668	0-1010
N17-S-51429-9813	Z-2509	N17-T-35002-970	H-1106	N17-T-35004-230	H-1931	N17-T-35006-169	H-340	N17-T-35007-674	H-931
N17-S-51429-9813	Z-2510	N17-T-35002-998	0-320	N17-T-35004-240	E-2002	N17-T-35006-175	0-1159	N17-T-35007-684	0-1004
N17-S-51429-9813	Z-2511	N17-T-35003-237	0-1412	N17-T-35004-241	F-304	N17-T-35006-194	H-1004	N17-T-35007-715	0-1014
N17-S-51429-9813	Z-2512	N17-T-35003-320	0-1055	N17-T-35004-243	F-305	N17-T-35006-199	H-990	N17-T-35007-734	A-601
N17-S-51429-9813	Z-2513	N17-T-35003-322	0-1336	N17-T-35004-244	0-1097	N17-T-35006-201	0-551	N17-T-35007-794	A-603
N17-S-51429-9813	Z-2514	N17-T-35003-323	E-804	N17-T-35004-245	0-1098	N17-T-35006-202	0-553	N17-T-35007-795	A-604
N17-S-51429-9813	Z-2515	N17-T-35003-326	0-1155	N17-T-35004-247	0-1100	N17-T-35006-203	0-554	N17-T-35007-796	E-605
N17-S-51429-9813	Z-2516	N17-T-35003-352	0-1218	N17-T-35004-248	A-819	N17-T-35006-204	0-555	N17-T-35007-797	E-606
N17-S-51429-9813	Z-2517	N17-T-35003-368	E-2001	N17-T-35004-268	H-727	N17-T-35006-205	0-556	N17-T-35007-800	E-607
N17-S-51429-9813	Z-2518	N17-T-35003-430	0-1104	N17-T-35004-319	H-1301	N17-T-35006-206	0-557	N17-T-35007-803	0-1044
N17-S-51429-9813	Z-2519	N17-T-35003-431	0-1105	N17-T-35004-325	0-842	N17-T-35006-207	0-558	N17-T-35007-823	0-1052
N17-S-51429-9813	Z-2520	N17-T-35003-432	0-1106	N17-T-35004-422	0-902	N17-T-35006-208	0-559	N17-T-35007-837	H-614
N17-S-51429-9813	Z-2521	N17-T-35003-433	0-1107	N17-T-35004-448	A-841	N17-T-35006-209	0-560	N17-T-35007-838	H-1147
N17-S-51429-9813	Z-2522	N17-T-35003-435	0-1109	N17-T-35004-449	E-212	N17-T-35006-210	0-561	N17-T-35007-839	TM-1500
N17-S-51429-9813	Z-2523	N17-T-35003-436	0-1110	N17-T-35004-450	H-1268	N17-T-35006-211	0-562	N17-T-35007-840	0-924
N17-S-51429-9813	Z-2524	N17-T-35003-437	0-1111	N17-T-35004-451	A-613	N17-T-35006-212	0-563	N17-T-35007-930	0-1141
N17-S-51429-9813	Z-2525	N17-T-35003-438	0-1112	N17-T-35004-452	R-600	N17-T-35006-213	0-564	N17-T-35008-110	H-1465
N17-S-51429-9813	Z-2526	N17-T-35003-439	0-1113	N17-T-35004-453	H-629	N17-T-35006-214	0-565	N17-T-35008-111	H-493
N17-S-51429-9813	Z-2527	N17-T-35003-440	0-1114	N17-T-35004-454	H-1302	N17-T-35006-215	0-566	N17-T-35008-192	0-938
N17-S-51429-9813	Z-2528	N17-T-35003-441	0-1084	N17-T-35004-455	H-656	N17-T-35006-216	0-567	N17-T-35008-306	H-686
N17-S-51429-9813	Z-2529	N17-T-35003-442	0-1086	N17-T-35004-490	H-666	N17-T-35006-217	0-568	N17-T-35008-323	0-1090
N17-S-51429-9813	Z-2530	N17-T-35003-443	0-1087	N17-T-35004-498	H-666	N17-T-35006-218	0-569	N17-T-35008-345	H-704
N17-S-51429-9813	Z-2531	N17-T-35003-444	A-824	N17-T-35004-580	0-1556	N17-T-35006-219	0-570	N17-T-35008-346	0-923
N17-S-51429-9813	Z-2532	N17-T-35003-445	0-1056	N17-T-35004-586	A-1316	N17-T-35006-220	0-571	N17-T-35008-376	0-1348
N17-S-51429-9813	Z-2533	N17-T-35003-446	A-8215	N17-T-35004-588	A-1318	N17-T-35006-221	0-572	N17-T-35008-377	H-1324
N17-S-51429-9813	Z-2534	N17-T-35003-451	A-8215	N17-T-35004-592	H-1693	N17-T-35006-222	0-573	N17-T-35008-395	A-826
N17-S-51429-9813	Z-2535	N17-T-35003-452	H-1040	N17-T-35004-595	A-617	N17-T-35006-223	0-574	N17-T-35008-396	E-626
N17-S-51429-9813	Z-2536	N17-T-35003-453	0-918	N17-T-35004-596	0-1301	N17-T-35006-224	0-575	N17-T-35008-397	H-1272
N17-S-51429-9813	Z-2537	N17-T-35003-454	0-919	N17-T-35004-597	0-1148	N17-T-35006-225	0-576	N17-T-35008-398	0-415
N17-S-51429-9813	Z-2538	N17-T-35003-455	0-920	N17-T-35004-602	0-1216	N17-T-35006-226	0-577	N17-T-35008-399	H-1385
N17-S-51429-9813	Z-2539	N17-T-35003-456	0-921	N17-T-35004-603	0-1149	N17-T-35006-227	0-578	N17-T-35008-405	0-414
N17-S-51429-9813	Z-2540	N17-T-35003-457	0-922	N17-T-35004-604	0-1150	N17-T-35006-232	H-864	N17-T-35008-541	H-1107
N17-S-51429-9813	Z-2541	N17-T-35003-458	0-1136	N17-T-35004-607	0-1009	N17-T-35006-243	0-944	N17-T-35008-554	P-401
N17-S-51429-9813	Z-2542	N17-T-35003-459	0-1137	N17-T-35004-608	0-1020	N17-T-35006-245	A-820	N17-T-35008-620	E-201
N17-S-51429-9813	Z-2543	N17-T-35003-460	0-1138	N17-T-35004-620	0-1062	N17-T-35006-251	0-964	N17-T-35008-651	E-612
N17-S-51429-9813	Z-2544	N17-T-35003-461	0-1082	N17-T-35004-628	0-1001	N17-T-35006-253	0-552	N17-T-35008-665	E-609
N17-S-51429-9813	Z-2545	N17-T-35003-462	0-1083	N17-T-35004-630	A-1705	N17-T-35006-254	0-553	N17-T-35008-701	A-704
N17-S-51429-9813	Z-2546	N17-T-35003-463	0-1092	N17-T-35004-632	H-1593	N17-T-35006-273	0-973	N17-T-35008-803	0-702
N17-S-51429-9813	Z-2547	N17-T-35003-510	A-827	N17-T-35004-635	0-1054	N17-T-35006-274	0-974	N17-T-35008-803	H-1008
N17-S-51429-9813	Z-2548	N17-T-35003-512	A-844	N17-T-35004-636	W-601	N17-T-35006-293	0-975	N17-T-35008-817	H-300
N17-S-51429-9813	Z-2549	N17-T-35003-513	A-825	N17-T-35004-637	W-602	N17-T-35006-296	0-976	N17-T-35008-818	E-104
N17-S-51429-9813	Z-2550	N17-T-35003-516	A-823	N17-T-35004-640	H-1212	N17-T-35006-297	0-977	N17-T-35008-832	R-110
N17-S-51429-9813	Z-2551	N17-T-35003-517	0-1066	N17-T-35004-643	H-1213	N17-T-35006-300	H-1503	N17-T-35009-212	S-700
N17-S-51429-9813	Z-2552	N17-T-35003-527	0-1365	N17-T-35004-665	0-1026	N17-T-35006-301	H-307	N17-T-35009-301	H-1265
N17-S-51429-9813	Z-2553	N17-T-35003-528	0-1364	N17-T-35004-667	0-1357	N17-T-35006-305	0-940	N17-T-35009-523	A-1429
N17-T-35001-472	0-811								

TABLE 8-5. CROSS REFERENCE PARTS LIST

STANDARD NAVY STOCK NO.	KEY SYMBOL	STANDARD NAVY STOCK NO.	KEY SYMBOL	STANDARD NAVY STOCK NO.	KEY SYMBOL	STANDARD NAVY STOCK NO.	KEY SYMBOL	STANDARD NAVY STOCK NO.	KEY SYMBOL
N17-T-350009-524	H-430	N17-T-350012-643	H-461	N17-T-350016-227	0-322	N17-T-350016-427	0-1169	N17-T-350016-746	A-2102
N17-T-350009-540	H-1352	N17-T-350012-644	H-841	N17-T-350016-228	A-410	N17-T-350016-428	0-1006	N17-T-350016-748	A-2101
N17-T-350009-541	0-1510	N17-T-350012-645	H-602	N17-T-350016-229	H-434	N17-T-350016-429	0-1521	N17-T-350016-749	0-2107
N17-T-350009-548	H-1595	N17-T-350012-646	H-800	N17-T-350016-230	0-403	N17-T-350016-430	0-1389	N17-T-350016-750	0-2110
N17-T-350009-552	H-813	N17-T-350012-647	H-308	N17-T-350016-231	0-404	N17-T-350016-431	0-1154	N17-T-350016-751	0-1165
N17-T-350009-627	H-1309	N17-T-350012-650	H-627	N17-T-350016-232	H-491	N17-T-350016-434	0-1164	N17-T-350016-752	0-1168
N17-T-350009-677	H-1671	N17-T-350012-655	H-1403	N17-T-350016-233	A-417	N17-T-350016-435	0-1171	N17-T-350016-753	H-1035
N17-T-350009-759	TB-601	N17-T-350012-657	H-687	N17-T-350016-234	0-407	N17-T-350016-437	H-1657	N17-T-350016-755	0-2109
N17-T-350009-792	0-1147	N17-T-350012-659	H-837	N17-T-350016-235	0-406	N17-T-350016-438	A-709	N17-T-350016-756	0-2108
N17-T-350009-793	E-1510	N17-T-350012-663	0-302	N17-T-350016-236	0-328	N17-T-350016-439	A-1524	N17-T-350016-757	0-398
N17-T-350009-844	0-709	N17-T-350012-665	H-719	N17-T-350016-237	A-1903	N17-T-350016-441	0-410	N17-T-350016-758	E-1502
N17-T-350009-846	H-1169	N17-T-350012-666	H-714	N17-T-350016-238	A-1904	N17-T-350016-442	0-324	N17-T-350016-759	L-801
N17-T-350009-858	0-428	N17-T-350012-674	H-717	N17-T-350016-239	0-327	N17-T-350016-443	0-1903	N17-T-350016-760	0-1162
N17-T-350009-860	H-1100	N17-T-350012-690	H-1461	N17-T-350016-240	0-1904	N17-T-350016-445	0-401	N17-T-350017-0514	E-110
N17-T-350009-861	0-1132	N17-T-350012-705	0-1122	N17-T-350016-241	A-1922	N17-T-350016-446	0-405	N17-T-350017-0515	H-1850
N17-T-350009-863	0-1374	N17-T-350012-708	0-1335	N17-T-350016-242	H-1551	N17-T-350016-447	A-419	N17-T-350017-0516	A-836
N17-T-350009-895	0-1138	N17-T-350012-710	E-304	N17-T-350016-243	H-1536	N17-T-350016-448	0-1905	N17-T-350017-0517	A-838
N17-T-350009-896	N-800	N17-T-350012-714	0-1306	N17-T-350016-244	H-1549	N17-T-350016-449	H-492	N42-0-19213-355	H-391
N17-T-350009-911	H-1684	N17-T-350012-718	0-1012	N17-T-350016-245	H-1544	N17-T-350016-457	H-1662	N42-0-13393-1355	H-2095
N17-T-350009-974	E-204	N17-T-350012-719	0-1030	N17-T-350016-246	H-1550	N17-T-350016-458	A-705	N42-8-26462-2135	H-2098
N17-T-350010-134	0-623	N17-T-350012-931	H-341	N17-T-350016-247	H-1547	N17-T-350016-459	A-837	N42-8-26524-3765	H-342
N17-T-350010-170	E-601	N17-T-350012-936	H-1674	N17-T-350016-248	0-1507	N17-T-350016-460	0-1553	N43-N-9699-560	H-343
N17-T-350010-262	0-1158	N17-T-350013-108	H-304	N17-T-350016-249	0-1074	N17-T-350016-461	0-1326	N43-N-9699-615	H-344
N17-T-350010-375	H-1915	N17-T-350013-109	H-969	N17-T-350016-250	H-1541	N17-T-350016-462	0-1504	N43-N-81013-1610	H-394
N17-T-350010-580	0-1108	N17-T-350013-110	H-1734	N17-T-350016-251	H-1188	N17-T-350016-463	A-1505	N43-W-7523-122	H-962
N17-T-350010-581	0-1037	N17-T-350013-113	H-619	N17-T-350016-252	H-1218	N17-T-350016-464	0-1533		
N17-T-350010-583	0-1045	N17-T-350013-114	H-1308	N17-T-350016-253	H-742	N17-T-350016-465	0-1311		
N17-T-350010-584	0-1115	N17-T-350013-115	H-1058	N17-T-350016-254	H-1200	N17-T-350016-466	0-1523		
N17-T-350010-585	H-1095	N17-T-350013-121	H-964	N17-T-350016-255	H-1679	N17-T-350016-467	0-1530		
N17-T-350010-586	0-1085	N17-T-350013-122	H-402	N17-T-350016-257	H-1612	N17-T-350016-468	0-1312		
N17-T-350010-587	0-1191	N17-T-350013-124	H-1205	N17-T-350016-258	0-1391	N17-T-350016-469	0-1166		
N17-T-350010-588	H-1062	N17-T-350013-125	H-468	N17-T-350016-259	0-1342	N17-T-350016-470	0-1322		
N17-T-350010-589	0-1090	N17-T-350013-130	0-1046	N17-T-350016-261	0-1329	N17-T-350016-471	0-1316		
N17-T-350010-590	0-1036	N17-T-350013-131	H-1206	N17-T-350016-262	0-1073	N17-T-350016-472	0-1174		
N17-T-350010-592	H-1087	N17-T-350013-133	H-703	N17-T-350016-270	H-733	N17-T-350016-473	0-1341		
N17-T-350010-593	0-1049	N17-T-350013-136	H-680	N17-T-350016-271	H-483	N17-T-350016-474	A-840		
N17-T-350010-594	0-1091	N17-T-350013-140	H-1116	N17-T-350016-272	0-1253	N17-T-350016-475	0-1901		
N17-T-350010-595	H-1071	N17-T-350013-150	H-660	N17-T-350016-273	H-1556	N17-T-350016-476	0-1929		
N17-T-350010-596	H-1050	N17-T-350013-154	H-1066	N17-T-350016-274	H-1576	N17-T-350016-477	A-707		
N17-T-350010-597	0-1089	N17-T-350013-155	H-1401	N17-T-350016-275	0-423	N17-T-350016-478	0-1508		
N17-T-350010-598	A-826	N17-T-350013-158	H-633	N17-T-350016-276	H-100	N17-T-350016-479	0-1161		
N17-T-350010-599	0-1093	N17-T-350013-160	H-1049	N17-T-350016-277	E-1900	N17-T-350016-480	0-1170		
N17-T-350010-600	0-1094	N17-T-350013-163	H-998	N17-T-350016-278	E-802	N17-T-350016-482	0-1928		
N17-T-350010-601	H-1030	N17-T-350013-165	H-305	N17-T-350016-279	H-1758	N17-T-350016-483	0-1853		
N17-T-350010-602	0-1070	N17-T-350013-169	H-667	N17-T-350016-280	A-1500	N17-T-350016-486	0-931		
N17-T-350010-604	0-1059	N17-T-350013-171	H-815	N17-T-350016-283	H-1512	N17-T-350016-507	L-1800		
N17-T-350010-606	0-1057	N17-T-350013-176	H-1363	N17-T-350016-284	H-1179	N17-T-350016-508	0-1160		
N17-T-350010-607	0-1058	N17-T-350013-188	H-1246	N17-T-350016-285	F-1908	N17-T-350016-523	E-1500		
N17-T-350010-608	0-1024	N17-T-350013-194	0-1224	N17-T-350016-286	H-465	N17-T-350016-530	0-1927		
N17-T-350010-609	A-803	N17-T-350013-195	H-487	N17-T-350016-287	H-1042	N17-T-350016-532	0-1811		
N17-T-350010-611	0-1144	N17-T-350013-196	0-625	N17-T-350016-288	H-1413	N17-T-350016-547	H-1464		
N17-T-350010-612	0-1038	N17-T-350013-200	H-1003	N17-T-350016-289	H-414	N17-T-350016-548	H-496		
N17-T-350010-613	0-1043	N17-T-350013-202	H-1616	N17-T-350016-290	H-421	N17-T-350016-549	0-433		
N17-T-350010-615	0-1041	N17-T-350013-206	H-753	N17-T-350016-291	H-1369	N17-T-350016-551	0-1328		
N17-T-350010-616	0-1039	N17-T-350013-208	H-624	N17-T-350016-292	H-1370	N17-T-350016-557	W-2003		
N17-T-350010-617	0-1042	N17-T-350013-213	H-716	N17-T-350016-294	H-1277	N17-T-350016-558	W-2002		
N17-T-350010-618	A-814	N17-T-350013-215	H-1521	N17-T-350016-295	H-1191	N17-T-350016-559	W-302		
N17-T-350010-621	H-1036	N17-T-350013-230	H-605	N17-T-350016-296	H-1390	N17-T-350016-560	W-1901		
N17-T-350010-622	0-1083	N17-T-350013-234	H-1685	N17-T-350016-297	H-1672	N17-T-350016-561	W-1903		
N17-T-350010-623	0-1082	N17-T-350013-236	H-718	N17-T-350016-299	0-916	N17-T-350016-562	W-1902		
N17-T-350010-624	0-1077	N17-T-350013-243	H-1159	N17-T-350016-300	0-1320	N17-T-350016-563	0-1561		
N17-T-350010-625	0-1072	N17-T-350013-247	H-1043	N17-T-350016-302	0-1321	N17-T-350016-564	TB-202		
N17-T-350010-627	0-1190	N17-T-350013-248	H-1271	N17-T-350016-303	0-1319	N17-T-350016-567	0-1513		
N17-T-350010-628	H-1077	N17-T-350013-256	L-600	N17-T-350016-304	0-1522	N17-T-350016-568	0-1563		
N17-T-350010-636	E-625	N17-T-350013-317	0-970	N17-T-350016-306	H-1184	N17-T-350016-569	0-1558		
N17-T-350010-645	H-1019	N17-T-350013-384	L-1300	N17-T-350016-309	0-1509	N17-T-350016-570	0-1557		
N17-T-350010-740	R-601	N17-T-350013-385	H-637	N17-T-350016-313	0-1514	N17-T-350016-571	H-495		
N17-T-350010-750	0-1047	N17-T-350013-388	H-1346	N17-T-350016-322	MS-1800	N17-T-350016-574	W-301		
N17-T-350010-753	H-1082	N17-T-350013-408	0-884	N17-T-350016-323	L-802	N17-T-350016-578	0-1163		
N17-T-350010-787	0-1150	N17-T-350013-446	0-611	N17-T-350016-324	H-1805	N17-T-350016-579	E-1501		
N17-T-350010-789	A-843	N17-T-350013-453	A-1306	N17-T-350016-325	0-1824	N17-T-350016-583	H-1408		
N17-T-350010-791	H-968	N17-T-350013-525	0-1101	N17-T-350016-326	E-1801	N17-T-350016-594	H-1253		

SIGNAL CORPS STOCK NO.	KEY SYMBOL
2Z1480.107	H-393
2Z2642-434	H-1715
2Z5042-186	H-391
2Z5598-28	J-1911
2Z5991-179	XI-501
2Z6125-104	I-502
2Z7228.33	J-700
2Z824.353	0-423
2Z9613.807	T-501
275598A89	J-216
30561A	L-501
3DA100-958	C-204
3DA500-917	0-700
3E4002.327	W-1701
3E4002.345	W-302
3E4002.346	W-2003
3E4020.178	W-1301
3E4020.179	W-702
3E4020.180	W-2002
3E4020.181	W-1300
3E4020.183	W-1501
3G320-502	E-216
3G320-505	E-802
3Z1892-87	Z-1300
3Z1892-87.1	Z-201
3Z1892.92	Z-101
3Z2601.33	F-1908
3Z2878	XF-501
3Z6005-229	R-101
3Z6200-251	R-102
3Z6300-260	R-209
3Z770-20.111	TB-1999
3Z770-200.2	TB-2002
3Z9580-60	E-209
3Z9823-43	S-1800
3Z9863-50K	S-501
4BE4020.177	W-1902
4C4818C	J-1917
4C4884A	J-308

N17-T-350010-792	H-978	N17-T-350013-637	0-978	N17-T-350016-327	0-1800	N17-T-350016-601	L-1801	4TBU118578	0-1927
N17-T-350010-811	0-301	N17-T-350013-660	L-1505	N17-T-350016-328	H-1830	N17-T-350016-602	W-1300	4T231M	L-802
N17-T-350010-812	A-302	N17-T-350013-639	I-303	N17-T-350016-329	H-1809	N17-T-350016-606	0-1848	4T1160	H-301
N17-T-350010-814	A-832	N17-T-350013-648	H-994	N17-T-350016-330	0-1857	N17-T-350016-607	0-1847	4T1207WU	0-1164
N17-T-350010-846	0-1554	N17-T-350013-655	H-1083	N17-T-350016-331	0-1841	N17-T-350016-618	Z-1800	4T1208WU	0-1163
N17-T-350010-848	A-1326	N17-T-350013-671	H-1386	N17-T-350016-332	0-1808	N17-T-350016-635	0-2098	4T2026WU	0-1171
N17-T-350010-849	A-1321	N17-T-350013-676	0-1334	N17-T-350016-333	0-1818	N17-T-350016-636	0-2099	4T72514	0-1035
N17-T-350010-858	0-1398	N17-T-350013-709	H-1220	N17-T-350016-334	E-1800	N17-T-350016-637	A-2099	4T72818	K-106
N17-T-350010-859	0-1366	N17-T-350013-740	H-422	N17-T-350016-335	0-1845	N17-T-350016-638	A-1999	4T76247	0-1169
N17-T-350010-860	0-1379	N17-T-350013-745	H-440	N17-T-350016-336	W-1701	N17-T-350016-639	0-1999	4T76450	0-1390
N17-T-350010-868	H-1404	N17-T-350013-780	0-1536	N17-T-350016-337	W-1702	N17-T-350016-640	A-1998	4T85465	0-1527
N17-T-350010-869	0-1502	N17-T-350013-781	0-1501	N17-T-350016-338	H-1767	N17-T-350016-642	A-1997	4T93807	H-733
N17-T-350010-882	A-1310	N17-T-350013-786	E-1330	N17-T-350016-339	E-1503	N17-T-350016-643	0-1998	4T98209	0-419
N17-T-350010-885	0-1504	N17-T-350013-797	H-1460	N17-T-350016-340	E-1505	N17-T-350016-644	0-1997	4T98201	0-418
N17-T-350010-977	0-416	N17-T-350013-800	H-1227	N17-T-350016-341	0-1013	N17-T-350016-645	0-1991	4T98209	0-408
N17-T-350011-53	H-1601	N17-T-350013-810	0-1385	N17-T-350016-342	0-1332	N17-T-350016-646	0-1992	4T98210	A-417
N17-T-350011-231	H-699	N17-T-350013-813	0-1318	N17-T-350016-343	0-1851	N17-T-350016-647	E-1998	4T98235	H-424
N17-T-350011-241	0-1050	N17-T-350013-909	0-1189	N17-T-350016-344	0-1815	N17-T-350016-648	A-201	4T98278	H-1413
N17-T-350011-298	H-401	N17-T-350014-116	H-1347	N17-T-350016-345	0-1860	N17-T-350016-656	0-394	4T98278	A-410
N17-T-350011-316	A-1320	N17-T-350014-242	H-1664	N17-T-350016-346	0-1852	N17-T-350016-657	0-395	4T102212	A-409
N17-T-350011-346	A-614	N17-T-350014-511	0-304	N17-T-350016-347	0-1862	N17-T-350016-661	0-1994	4T102213	0-421
N17-T-350011-347	H-679	N17-T-350014-590	H-453	N17-T-350016-348	0-1822	N17-T-350016-665	0-1998	4T102345	0-420
N17-T-350011-349	A-1608	N17-T-350014-591	H-406	N17-T-350016-349	0-1823	N17-T-350016-666	A-1373	4T111436	A-1624
N17-T-350011-377	H-1573	N17-T-350014-594	H-431	N17-T-350016-350	0-1827	N17-T-350016-668	H-764	4T111464	A-1384
N17-T-350011-497	0-1021	N17-T-350014-602	H-489	N17-T-350016-352	0-1802	N17-T-350016-669	0-1409	4T111537	0-1903
N17-T-350011-505	A-917	N17-T-350014-618	0-1324	N17-T-350016-353	0-1810	N17-T-350016-671	0-1555	4T111545	0-1902
N17-T-350011-506	H-1263	N17-T-350014-719	0-1432	N17-T-350016-554	0-1855	N17-T-350016-672	H-1995	4T111546	0-1901
N17-T-350011-507	H-668	N17-T-350014-748	0-1315	N17-T-350016-555	0-1861	N17-T-350016-673	H-1994	4T111784	0-1391
N17-T-350011-851	W-600	N17-T-350014-749	0-1333	N17-T-350016-556	0-1828	N17-T-350016-674	H-1996	4T112573	0-1395
N17-T-350011-862	A-619	N17-T-350014-785	0-1361	N17-T-350016-557	0-1806	N17-T-350016-676	H-1998	4T112574	0-926
N17-T-350011-863	A-612	N17-T-350014-922	H-1509	N17-T-350016-559	0-1826	N17-T-350016-678	H-1997	4T112688	0-927
N17-T-350011-868	A-1560	N17-T-350014-925	H-1500	N17-T-350016-563	0-325	N17-T-350016-680	H-1999	4T112689	0-1507
N17-T-350012-238	A-1302	N17-T-350014-926	0-1317	N17-T-350016-564	A-1905	N17-T-350016-681	H-1992	4T113185	E-215
N17-T-350012-240	0-1545	N17-T-350014-931	H-995	N17-T-350016-565	A-1511	N17-T-350016-685	H-1993	4T113185	E-214
N17-T-350012-242	0-1069	N17-T-350014-932	H-1015	N17-T-350016-566	A-1216	N17-T-350016-687	H-2096	4T114062	0-1253
N17-T-350012-249	H-1632	N17-T-350015-104	H-1368	N17-T-350016-568	E-800	N17-T-350016-689	H-397	4T114107	0-1154
N17-T-350012-251	H-1626	N17-T-350015-127	H-1383	N17-T-350016-569	0-520	N17-T-350016-694	H-2097	4T114499	0-412
N17-T-350012-252	0-1373	N17-T-350015-163	H-818	N17-T-350016-570	0-527	N17-T-350016-695	H-2094	4T114501	0-409
N17-T-350012-266	A-1380	N17-T-350015-391	H-606	N17-T-350016-571	0-1537	N17-T-350016-698	H-2095	4T116017	0-1024
N17-T-350012-268	0-1119	N17-T-350015-430	H-440	N17-T-350016-572	0-1502	N17-T-350016-699	H-2096	4T116021	0-322
N17-T-350012-269	0-1222	N17-T-350015-546	H-810	N17-T-350016-573	Z-1300	N17-T-350016-701	H-393	4T116028	0-323
N17-T-350012-270	0-1562	N17-T-350015-638	H-838	N17-T-350016-574	0-1519	N17-T-350016-702	H-390	4T116040	0-388
N17-T-350012-283	H-1316	N17-T-350015-639	0-1313	N17-T-350016-575	W-702	N17-T-350016-703	H-395	4T116780	H-1184
N17-T-350012-292	0-1040	N17-T-350015-640	H-851	N17-T-350016-576	A-1341	N17-T-350016-705	H-2093	4T117743	0-397
N17-T-350012-296	0-1538	N17-T-350015-653	H-980	N17-T-350016-577	A-1340	N17-T-350016-706	H-2092	4T117807	0-396
N17-T-350012-347	0-1503	N17-T-350015-673	0-1053	N17-T-350016-578	0-1350	N17-T-350016-707	H-398	4T117808	0-395
N17-T-350012-348	H-1683	N17-T-350015-674	H-803	N17-T-350016-579	0-1511	N17-T-350016-708	0-1173	4T117809	0-394
N17-T-350012-422	E-622	N17-T-350015-675	A-806	N17-T-350016-580	0-1506	N17-T-350016-709	H-1991	4T117824	0-326
N17-T-350012-433	C-600	N17-T-350015-689	A-807	N17-T-350016-581	H-1605	N17-T-350016-711	F-310	4T117825	H-1937
N17-T-350012-461	C-1382	N17-T-350015-790	B-810	N17-T-350016-582	A-835	N17-T-350016-712	0-397	4T117828	0-1519
N17-T-350012-484	H-967	N17-T-350015-892	B-608	N17-T-350016-583	0-1172	N17-T-350016-713	H-2103	4T117832	0-1521
N17-T-350012-485	H-1373	N17-T-350015-959	E-616	N17-T-350016-584	0-1179	N17-T-350016-714	H-2101	4T117833	H-1238
N17-T-350012-487	H-316	N17-T-350016-117	Z-101	N17-T-350016-585	A-1303	N17-T-350016-715	H-969	4T117834	0-1522
N17-T-350012-497	H-1138	N17-T-350016-132	H-1022	N17-T-350016-588	E-218	N17-T-350016-716	H-1992	4T117837	H-1576
N17-T-350012-498	H-1604	N17-T-350016-141	H-1153	N17-T-350016-589	B-1801	N17-T-350016-717	H-2091	4T117838	H-1657
N17-T-350012-507	H-466	N17-T-350016-173	H-2099	N17-T-350016-590	H-1896	N17-T-350016-718	H-1176	4T117845	H-1996
N17-T-350012-521	0-1452	N17-T-350016-210	0-1937	N17-T-350016-591	H-1829	N17-T-350016-721	H-389	4T117861	0-1006
N17-T-350012-536	0-945	N17-T-350016-211	H-346	N17-T-350016-592	H-1819	N17-T-350016-722	H-1217	4T120553	0-327
N17-T-350012-543	H-889	N17-T-350016-212	H-424	N17-T-350016-593	0-1331	N17-T-350016-730	0-396	4T123514	0-1350
N17-T-350012-544	H-963	N17-T-350016-213	H-1937	N17-T-350016-594	0-1337	N17-T-350016-731	H-1575	4T123683	H-491
N17-T-350012-554	H-817	N17-T-350016-214	H-1938	N17-T-350016-596	0-1528	N17-T-350016-732	H-108	4T123700	A-1389
N17-T-350012-555	H-1141	N17-T-350016-215	0-1324	N17-T-350016-597	0-1803	N17-T-350016-733	H-1930	4T123952	0-1549
N17-T-350012-558	H-1138	N17-T-350016-216	0-1431	N17-T-350016-598	0-1854	N17-T-350016-734	A-1706	4T124138	0-916
N17-T-350012-560	H-1922	N17-T-350016-217	A-409	N17-T-350016-599	0-1831	N17-T-350016-735	E-801	4T126905	0-407
N17-T-350012-623	E-621	N17-T-350016-218	0-412	N17-T-350016-404	H-1661	N17-T-350016-736	A-1309	4T126907	0-406
N17-T-350012-628	H-1068	N17-T-350016-219	0-429	N17-T-350016-405	H-1662	N17-T-350016-737	A-1310	4T126908	0-405
N17-T-350012-634	H-1015	N17-T-350016-220	0-419	N17-T-350016-406	H-1343	N17-T-350016-738	0-1339	4T126909	0-409
N17-T-350012-636	H-442	N17-T-350016-221	0-408	N17-T-350016-407	H-933	N17-T-350016-739	A-1312	4T126910	0-401
N17-T-350012-638	H-818	N17-T-350016-222	0-345	N17-T-350016-408	H-926	N17-T-350016-740	A-1300	4T126911	H-434
N17-T-350012-639	H-301	N17-T-350016-223	0-326	N17-T-350016-410	0-1812	N17-T-350016-741	0-1552	4T126912	0-404
N17-T-350012-640	H-1072	N17-T-350016-224	0-421	N17-T-350016-415	0-926	N17-T-350016-742	0-2103	4T126914	A-423
N17-T-350012-641	H-658	N17-T-350016-225	0-403	N17-T-350016-422	E-215	N17-T-350016-743	0-2105	4T126915	A-413
N17-T-350012-642	H-315	N17-T-350016-226	0-402	N17-T-350016-423	E-214	N17-T-350016-744	0-2104	4T126916	0-429
				N17-T-350016-426	0-1549	N17-T-350016-745	0-1075	4T126920	

TABLE 8-5. CROSS REFERENCE PARTS LIST

SIGNAL CORPS STOCK NO.	KEY SYMBOL	U. S. AIR FORCE STOCK NO.	KEY SYMBOL	U. S. AIR FORCE STOCK NO.	KEY SYMBOL	U. S. AIR FORCE STOCK NO.	KEY SYMBOL		
4T126981	A-705	1730-040036828	0-1086	1730-043952560	0-991	3370-679750-1121	CR-503		
4T126982	H-742	1730-040036832	0-1037	1730-043952563	0-940	3380-172400-3615	L-801		
4T126988	0-402	1730-040036836	0-1110	1730-043952572	0-802	3380-172400-3925	L-802		
4T128256	0-1509	1730-040225013	E-704	1730-043952581	0-1036	3380-501525-6111	K-104		
4T128257	0-1511	1730-040335508	H-1404	1730-043952614	0-1177	3380-501525-6925	K-207		
4T128258	0-1523	1730-040391219	0-942	1730-043952617	0-432	3380-511125-2165	K-105		
4T128259	0-1533	1730-040392514	0-407	1730-043952620	0-1345	3380-511125-5895	K-1800		
4T128261	0-1551	1730-040392518	0-1321	1730-043952653	0-1090	3380-536245-7795	K-102		
4T128262	0-1553	1730-040392522	0-1508	1730-043952878	0-1025	3380-552180-5645	K-203		
4T128264	0-1508	1730-040463809	H-1413	1730-044209382	H-1216	3380-554625-7445	K-202		
4T128266	0-1504	1730-040475078	0-1378	1730-044281008	H-1100	3380-555170-3515	K-103		
4T128267	H-1550	1730-040475082	A-824	1730-044310001	0-611	3380-555170-7115	K-204		
4T128268	H-1549	1730-040475114	A-1504	1730-044620360	0-1330	3380-552180-2825	K-101		
4T128270	0-1506	1730-040628166	0-1048	1730-044620390	0-1334	6700-191150-24	H-1715		
4T128271	H-1541	1730-040693200	H-1526	1730-044620470	H-1015	7700-525786	XF-1901		
4T128272	H-1544	1730-040723131	0-1166	1730-044620480	H-442	7700-527247-255	I-502		
4T128274	A-1505	1730-040723135	0-1024	1730-044620550	H-1346	7700-530055	XI-501		
4T128325	0-1514	1730-040723139	0-1322	1730-044620934	H-1272	8800-030800	XF-501		
4T128330	0-1530	1730-040723151	0-1021	1730-044620954	H-738	8800-356107	F-503		
4T128331	H-1547	1730-040725129	0-1312	1730-044620958	0-411	8850-514243	J-2099		
4T128338	H-1605	1730-040725133	0-1311	1730-044645096	H-1159	8850-749390	J-216		
4T128394	H-345	1730-040725137	0-1031	1730-044645162	0-1005	8880-500651-4855	TB-1500		
4T128399	0-328	1730-040725149	0-1409	1730-044771003	B-1801	8880-747000-4162	E-104		
4T128541	A-201	1730-040725153	0-1165	1730-044796550	0-1318	8880-749000-8885	E-612		
4T128550	E-1998	1730-040821214	H-883	1730-044796588	0-1382				
4T128579	0-1996	1730-040855003	0-1018	1730-044796616	0-1123				
4T128580	0-1997	1730-040855006	0-1163	1730-044796628	0-1383				
4T128581	0-1995	1730-040855009	0-1017	1730-044796636	0-1507	**JAN (OR AWS) DESIGNATION**	**KEY SYMBOL**		
4T128595	A-198	1730-040868696	0-966	1730-044796640	0-1554				
4T128597	W-1901	1730-040868699	0-943	1730-081552145	E-1309				
4T128599	W-1903	1730-040868703	0-1043	1730-143951651	E-1503				
4T128603	0-1904	1730-040869012	E-1308	1730-480700000	H-972				
4T128627	A-103	1730-040869016	E-1307	1730-480702000	H-410	AN3102-A-24-28P	J-1904		
4T128655	0-1928	1730-040869040	E-1315	1730-480706000	H-1199	RC40-BF104K	R-502		
4T128665	0-1999	1730-040869044	E-1305	1730-480720000	H-816	RC40-BF153K	R-501		
4T128745	A-199	1730-040869083	E-1318	1730-480752000	0-1367				
4T128837	E-1900	1730-040890014	0-1158	1730-481027300	0-1548				
4T128861	0-1929	1730-041036776	0-1097	1730-481030000	H-888				
4T128862	0-1901	1730-041036784	0-1109	1730-481114000	H-818				
4T128863	A-707	1730-041036788	0-1112	1730-481116000	H-703				
4T128891	0-2099	1730-041036792	0-1113	1730-481148000	H-301				
4T128898	0-2098	1730-041036796	0-1084	1730-481150000	H-1072				
4T129077	H-1994	1730-041105147	0-1319	1730-481152000	H-1066				
4T129083	A-122	1730-041105151	0-1320	1730-481156000	H-1401				
4T129240	A-840	1730-041105163	0-1027	1730-481162000	H-1049				
4T129244	A-837	1730-041105167	0-1029	1730-481168000	H-317				
4T129245	0-1174	1730-041105171	0-1034	1730-481170000	H-658				
4T129247	A-835	1730-041235100	0-1325	1730-481172000	H-305				
4T129248	0-1172	1730-041262132	0-1094	1730-481182000	H-315				
4T129249	0-1179	1730-041390006	0-1069	1730-481190630	H-1268				
4T129252	A-834	1730-041512000	H-1460	1730-481256000	H-667				
4T129257	H-1612	1730-041512035	H-1227	1730-481294000	H-402				
4T129288	0-1321	1730-041524934	0-1539	1730-481340000	H-403				
4T129289	0-1320	1730-041524937	0-1197	1730-481354000	H-303				
4T129290	0-1319	1730-041524940	0-1558	1730-481350000	H-1097				
4T129291	0-1322	1730-041524943	0-1218	1730-481356000	H-316				
4T129292	0-1316	1730-041524946	0-1555	1730-481366000	H-741				
4T129296	0-1311	1730-041524952	0-1013	1730-481396000	H-325				
4T129298	A-1303	1730-041524955	0-1502	1730-481398000	H-1205				
4T129302	0-1341	1730-041524961	0-1501	1730-481420000	0-1524				
4T129306	0-1332	1730-041525296	0-1217	1730-481426000	0-1116				
4T129307	0-1337	1730-041525300	0-1557	1730-481436000	H-468				
4T129308	0-1331	1730-041525304	0-1007	1730-481448000	H-707				
4T129310	0-1329	1730-041525316	0-1188	1730-481460000	H-1138				
4T129313	0-1312	1730-041525332	0-1186	1730-481468000	H-1018				
4T129333	A-1500	1730-041525540	0-965	1730-481522000	H-841				
4T129336	E-1505	1730-041525544	0-945	1730-481524000	H-602				
4T129337	E-1503	1730-041560003	0-1221	1730-481532000	H-915				
4T129350	E-1500	1730-041560009	0-1170	1730-481542000	H-800				
4T129351	E-1501	1730-041693580	0-1067	1730-481544000	H-650				
4T151542	H-346	1730-041980000	H-1386	1730-481568000	0-917				
4T205663WU	0-1166	1730-042354004	0-1350	1730-481570000	0-1028				

4T20567WU	0-1160	1730-04235507	2	0-1316	1730-4815780	0-1143					
4T20871WU	0-1170	1730-04235508	1	0-805	1730-4816060	H-974					
4T20227WU	0-1161	1730-04235512	9	0-1045	1730-4816140	0-714					
4T20454WU	0-1073	1730-04235681	8	0-1346	1730-4816160	H-320					
4T20945WU	0-1075	1730-04236794	7	H-1087	1730-4817660	0-1095					
4Z6035	E-1999	1730-04283412	3	0-998	1730-4817670	0-1002					
6L1500&-8.8&	H-492	1730-04284107	6	0-985	1730-4817740	0-1129					
6L1706-18.8K	H-1758	1730-04284108	0	0-972	1730-4817820	0-431					
6L1711O-4.8K	H-100	1730-04317058	6	H-717	1730-4817980	0-317					
6L1710-9.8K2	H-1805	1730-04303569	4	A-826	1730-4818220	H-207					
6L1310-32-5S1	H-1191	1730-04318951	8	0-935	1730-4818520	H-1235					
6L1146-8-4WU	H-2816	1730-04396003	3	0-1252	1730-4818800	H-987					
6L1150-17-1	H-1372	1730-04311028	2	0-1257	1730-4818875	0-1335					
6L1409-32-23	H-465	1730-04315705	0	0-1390	1730-4819325	H-486					
6L3504-20-7S2	H-1042	1730-04345712	4	0-1072	1730-4819408	E-101					
6L3650-7	H-394	1730-04355722	0	0-1073	1730-4824320	0-1363					
6L1810-32-7	H-343	1730-04361250	6	H-1211	1730-4825420	0-2106					
6L3824-20-8	H-344	1730-04361302	1	H-1347	1730-4825820	H-700					
6L942-14-6	0-1905	1730-04361314	0	H-1361	1730-4826397	H-1246					
6L4904-12.4S	H-397	1730-04361399	4	H-1500	1730-4826640	0-608					
6L4904-13.81N	H-2099	1730-04361407	2	H-406	1730-4826680	H-977					
6L5024-2	H-1998	1730-04361412	0	H-1220	1730-4826760	0-1011					
6L5040&2	0-1342	1730-04361413	8	H-1404	1730-4827660	H-1439					
6L5802&-34	H-1390	1730-04361414	6	H-1464	1703-4828094	H-1403					
6L5802&-119	H-962	1730-04361417	1	H-1481	1730-4830880	H-1465					
6L5802&-129	H-2091	1730-04362135	7	H-1366	1730-4833298	H-493					
6L5802&-180WU	H-1179	1730-04362152	4	H-1168	1730-4833622	H-926					
6L5802&1-3	H-189	1730-04362158	2	H-1115	1730-4833634	0-1353					
6L5802&6-103	H-1556	1730-04362188	0	H-1228	1730-4833652	H-731					
6L5802&8-45	H-483	1730-04365091	8	H-869	1730-4833654	0-937					
6L6640-10.58S	H-1369	1730-04383034	4	H-1134	1730-4833680	0-973					
6L6640-13.81S1	H-1343	1730-04383666	3	0-971	1730-4837140	B-626					
6L6640-3.7S	H-421	1730-04383672	1	0-970	1730-4837400	H-516					
6L6640-5.10S	H-1664	1730-04383684	7	0-1038	1730-4838240	0-1512					
6L6640-5.59S	H-1551	1730-04383687	4	0-1398	1730-4838400	H-466					
6L6640-5.81S	H-1512	1730-04383690	0	0-1010	1730-4838900	H-746					
6L6640-6.25S1	H-399	1730-04383692	6	0-950	1730-4839110	0-1358					
6L6640-6.86	H-1660	1730-04383696	0	0-997	1730-4843870	H-1117					
6L6832-10.81N	H-1369	1730-04383728	0	0-1224	1730-4844688	H-693					
6L6832-34.2S	H-395	1730-04383760	0	0-1386	1730-4851038	H-1521					
6L6832-36.5S	H-1997	1730-04383764	0	0-928	1730-4851204	0-1147					
6L6832-21.7S	H-2094	1730-04383772	0	0-430	1730-4851280	0-1153					
6L6832-581	H-2097	1730-04383776	0	0-1046	1730-4853010	0-992					
6L6832-22.3S	H-2093	1730-04383780	8	0-1314	1730-4854000	P-1316					
6L7032-18.81S	H-414	1730-04383792	0	0-1535	1730-4854668	H-1030					
6L7032-21.54S	H-398	1730-04383796	2	0-623	1730-4859200	H-1022					
6L7032-6.5481	H-390	1730-04383828	1	0-1384	1730-4861100	B-800					
6L7032-9.4C	H-495	1730-04383830	6	0-1325	1730-4861100	K-106					
6L7032-9.50S	H-1999	1730-04383834	2	0-1074	1730-941525564	0-1559					
6L7102	H-1995	1730-04391597	4	A-838	3320-4855500	C-603					
6L804-1	H-1993	1730-04391618	2	E-1500	3320-0612745	E-1507					
6M1684-5	0-1824	1730-04391621	0	E-1501	3320-0815194	E-111					
6M688-11	MS-1800	1730-04391636	7	0-415	3320-0815155	E-1500					
6Z1749-7	H-2095	1730-04391645	5	A-836	3320-0818033	E-634					
6Z1749-99	H-2098	1730-04391648	9	E-1505	3320-0823150	H-109					
6Z8355-1	XF-1901	1730-04391660	1	0-1333	3320-0823165	E-1506					
		1730-04391760	4	0-1324	3320-0827165	E-632					
		1730-04391840	1	0-1317	3330-0577026	C-201					
		1730-04392104	3	0-1165	3330-4838640	Z-301					
		1730-04392113	2	0-1306	3340-0639021	T-501					
		1730-04392428	0	0-1338	3350-468000-4511	R-101					
		1730-04392455	7	0-704	3350-468000-6197	R-269					
		1730-04392467	4	0-1377	3350-468000-7485	R-102					
		1730-04392473	2	0-1389	3350-492000-2786	R-104					
		1730-04392500	8	0-1164	3350-494000-1911	R-201					
		1730-04392512	6	0-1121	3350-516000-4173	R-202					
		1730-04392536	4	0-1175	3350-516000-6895	R-109					
		1730-04392539	3	0-1028	3350-527000-4954	R-111					
		1730-04392545	1	0-1119	3350-536000-2466	R-204					
		1730-04392557	9	0-1035	3360-07301270	R-175					
					3360-07310430	S-702					
					3360-39585350	S-800					
						S-501					

U.S. AIR FORCE STOCK NO.	KEY SYMBOL
1730-30299&4	0-1014
1730-6663200	H-302
1730-04002163	0-1075
1730-04003171	0-1132
1730-04003604	0-1099
1730-04003608	0-1101
1730-04003612	0-1102
1730-04003620	0-1088
1730-04003624	0-1087

TABLE 8-6. LIST OF MANUFACTURERS

PREFIX	NAME	ADDRESS
ACH	American Cabinet Hardware Corp.	Rockford, Illinois
ACO	Ames Supply Co.	Chicago, Illinois
APL	Appleton Electric Co.	1713 W. Wellington Avenue, Chicago, Illinois
CAE	Cutler Hammer Inc.	1333 W. St. Paul Avenue, Milwaukee, Wisconsin
CAIU	Power Equipment Co.	55 Antoinette Street, Detroit, Michigan
CAO	Ward Leonard Electric Co.	6 South Street, Mount Vernon, New York
CATK	Acro Electric Co.	1305 Superior Avenue, Cleveland, Ohio
CAU	Automatic Electric Co.	1033 W. Van Buren Street, Chicago 7, Illinois
CAXO	Shakeproof Inc.	2573 N. Keeler Avenue, Chicago, Illinois
CAXP	Lord Mfg., Co.	1639 W. 12th Street, Erie, Pennsylvania
CAYZ	Dial Light Corp.	900 Broadway, New York, New York
CBAK	United States Rubber Co.	1230 Sixth Avenue, New York, New York
CBGB	Sarkes Tarzian Inc.	537 S. Walnut Street, Bloomington, Indiana
CBIM	Switchcraft Co.	1328-30 N. Halsted Street, Chicago, Illinois
CBZ	Allen Bradley Co.	Milwaukee 4, Wisconsin
CEJ	E.F. Johnson Co.	Waseca, Minnesota
CFA	Bussman Mfg. Co.	2538 W. University Street, St. Louis, Missouri
CG	General Electric Co.	1 River Road, Schenectady 5, New York
CGE	Guardian Electric Mfg. Co.	1623 W. Walnut Street, Chicago, Illinois
CGM	Cincinnati Gilbert Machine Tool Co.	Cincinnati, Ohio
CHH	Arrow-Hart & Hegemen Electric Co.	102 Hawthorne Street, Hartford, Connecticut
CHTC	Chicago Thrift Etching Corp.	Chicago 7, Illinois
CHU	Harvey Hubbell Inc.	447 Concord Avenue, Bridgeport, Connecticut
CIE	Industrial Condenser Corp.	3243 N. California Avenue, Chicago 18, Illinois
CIK	Edwards & Co., Inc.	Boston Post Road, Norwalk, Connecticut
CJB	J.H. Bunnell & Co.	215 Fulton Street, Brooklyn, New York
CJC	Howard B. Jones	2300 W. Wabansia Avenue, Chicago, Illinois
CLF	Littlefuse, Inc.	1865 Miner, Des Plaines, Illinois
CMA	P.R. Mallory Co., Inc.	1941 Thomas Street, Indianapolis, Indiana
CMG	Cinch Mfg. Co.	2339 W. Van Buren Street, Chicago, Illinois
CODO	Codo Mfg. Co.	509 S. Franklin Street, Chicago, Illinois
CPC	The Cromwell Paper Co.	Chicago, Illinois
CPH	Chicago Telephone Supply Co.	Elkhart, Indiana
CPW	Commercial Plastic Co.	Room 1198 Merchandise Mart Plaza, Chicago, Illinois
CRA	Utah Radio Products Co.	812 Orleans Street, Chicago, Illinois
CSF	Sprague Electric Co.	North Adams, Massachusetts
CSZ	Square D Co.	Detroit, Michigan
CTD	Tobe-Deutschmann Corp.	921 Providence Highway, Norwood, Massachusetts
CTT	Teletype Corp.	1400 Wrightwood, Chicago, Illinois
CW	Western Electric Co.	120 Broadway, New York, New York
CYD	Bryant Electric Co.	1421 State Street, Bridgeport, Connecticut
CYG	International Business Machine Corp.	Rochester, New York
EN	Elastic Stop Nut Co.	Union, New Jersey
ESNA	Essanay Electric Mfg. Co.	Chicago, Illinois
GE	General Electric Co.	Schenectady, New York
GT	Gits Bros. Mfg. Co.	Chicago, Illinois
IDSC	Industrial Screw & Supply Co.	Chicago 6, Illinois
LFK	Lion Fastener Inc.	Honeoye Falls, New York
MIL	Military Specification	
TIN	Tinnerman Products Co.	Box 6688, Cleveland, Ohio
TOR	Torrington Co.	Torrington, Connecticut
WKI	Waldes Kohinoor Inc.	Long Island City 1, New York

INDEX

SUBJECT	FIGURE OR TABLE	PAGE
A		
Adjustments	.....	.....
Electrical	.....	7–15
Line current	7–2	7–16
Power supply	7–1, 7–19, 7–20	7–15
Initial	.....	3–20
Monitor Group	.....	3–22
Tape-out alarm switch	.....	3–22
Tape path through reperforator	.....	3–22
Receiver Group	3–20	3–20
Length of tape feed-out	.....	3–21
Manual tape feed-out button	.....	3–20
Polar-neutral switch	.....	3–21
Tape-out contact	.....	3–20
Tape path through the reperforators	.....	3–20
Testing	3–16	3–22
Time stamp	.....	3–22
Transmitter Group	.....	3–21
Line current	7–5	3–22
Normal-long message switch	.....	3–22
Number-delete switch	.....	3–22
Mechanical	.....	7–18
Distributor-Transmitter	.....	7–65
Clutch latch lever spring tension	7–74	7–66
Clutch magnet armature spring tension	7–76	7–66
Clutch magnet bracket	7–74	7–65
Clutch shoe lever spring tension	7–78	7–68
Clutch shoe mechanism	7–77	7–67
Clutch spring tension	7–79	7–69
Clutch trip lever and latch lever	7–75	7–65
Clutch trip lever spring tension	7–74	7–66
Clutch trip reset lever	7–76	7–66
Comb shaft retainer	7–84	7–70
Door stop plate	.....	7–80
Feed pawl arm spring tension	7–98	7–76
Feed pawl lever	7–99	7–76
Feed pawl spring tension	7–98	7–76
Feed wheel detent	7–97	7–75
Feed wheels	7–95, 7–98	7–74
Letters operating lever	7–103	7–78
Letters operating lever horizontal extension	7–105	7–79
Letters operating lever horizontal extension spring tension	7–106	7–79
Letters operating lever vertical extension	7–104	7–78
Release bar contact	7–89	7–72
Release bar latch	7–107	7–80
Release bar spring tension	7–89	7–72
Selector lever bail	7–96, 7–106	7–75
Selector lever bail spring tension	7–96	7–75
Selector lever comb	7–90	7–73
Selector lever guide	7–80	7–76
Selector lever spring tension	7–80	7–75
Tape feed ratchet wheel detent spring tension	7–98	7–98
Tape lid (horizontal)	7–100, 7–101	7–77
Tape lid latch spring	7–102	7–78
Tape lid latch spring tension	7–102	7–78
Tape lid pivot screw	7–100	7–77
Tape lid (vertical)	7–100	7–77
Tape-out contact gap	7–87	7–71
Tape-out contact lever latch	7–85	7–71
Tape-out contact lever latch spring tension	7–86	7–71
Tape-out contact lever upstop	7–108	7–80
Tape-out contact spring pressure	7–88	7–71
Tape-out operating lever spring tension	7–88	7–71
Tape-out sensing lever	7–91, 7–92, 7–93	7–73
Tape-out sensing lever spring tension	7–86	7–75
Top plate	7–94, 7–102	7–74

SUBJECT	FIGURE OR TABLE	PAGE
Transmitting cam sleeve end play	7-73	7-65
Transmitting contact gap	7-80, 7-81	7-69
Transmitting contact spring pressure (final)	7-83	7-70
Transmitting contact spring pressure (preliminary)	7-82	7-69
Trip lever shaft compression spring	.....	7-67
Distributor-Transmitter Base	.....	7-80
Check pawl	7-110	7-83
Check pawl spring tension	7-110	7-82
Cover	.....	7-82
Door stop screw	.....	7-82
Feed pawl spring tension	7-110	7-82
Gear guard	.....	7-81
Main shaft	7-109	7-80
Motor pinion	.....	7-80
Motor pinion backlash	.....	7-81
Pivot arm	7-111	7-84
Pivot arm latch	7-111	7-84
Ratchet wheel hub end play	7-111	7-82
Rewind-reel slack arm	7-113	7-84
Rewind-reel slack arm spring tension	7-113	7-84
Slip connector	.....	7-81
Slip connector brackets	.....	7-81
Take-up reel clutch torque	7-112	7-82
Take-up reel position	.....	7-83
Tape reel stop pawl spring tension	7-112	7-84
Tape winder shaft bearing alignment	.....	7-82
Tight-tape arm	7-112	7-84
Electrical Equipment Cabinet CY-1522/FGC (Monitoring)	.....	7-21
Base	7-3	7-21
Disappearing door	.....	7-21
Detent studs	.....	7-21
Disappearing door detent spring	.....	7-21
Doors and leaders	.....	7-21
Door rail	7-5	7-21
Door rollers	.....	7-21
Door stop	.....	7-21
Guides and rails	.....	7-21
Lower front hinged door	.....	7-22
Stop strip	.....	7-22
Stud	.....	7-22
Rear door	.....	7-21
Rear door latch	.....	7-22
Stop strip	.....	7-21
Shelf plate	.....	7-22
Slide and tray	.....	7-22
Side panel strip	.....	7-22
Sliding tray	.....	7-22
Tape reel tape-out adjusting screw	.....	7-22
Tape reel tape-out contact lever	.....	7-22
Tape reel tape-out contact lever spring tension	.....	7-22
Tape reel tape-out contacts	.....	7-22
Electrical Equipment Cabinet CY-1523/FGC (Receiver)	.....	7-18
Base	.....	7-18
Bottom front door	.....	7-18
Center support frame	7-3	7-18
Control panel	.....	7-18
Control panel support	.....	7-18
Doors and panels	.....	7-18
Front doors	.....	7-18
Patching panel	.....	7-18
Rear control panel	.....	7-18
Rear doors	.....	7-18
Slide	.....	7-18
Sliding tray	.....	7-18
Tape container	.....	7-18
Tape container and tape-out contacts	.....	7-21
Electrical Equipment Cabinet CY-1524/FGC (Transmitter)	.....	7-21
Control panel shelf	.....	7-21
Front doors	.....	7-21
Patch frame assembly	7-4	7-21
Rear doors	.....	7-21
Sliding shelf	.....	7-21
Tape holder frame assembly	.....	7-21
Motors	.....	.....
Governed motor	.....	7-30
Adjusting lever wearing strip	7-11	7-32
Armature end thrust spring pressure	.....	7-33
Governor adjusting bracket	7-11	7-33
Governor brush springs	7-11	7-33
Governor brush spring plate bracket	7-9	7-32
Governor contacts	7-12	7-31
Governor shell	7-9	7-31
Inner and outer disk contact springs	7-13	7-32

SUBJECT	FIGURE OR TABLE	PAGE
Motor speed adjusting lever and governor adjusting bracket	7-9, 7-11	7-30
Speed adjusting lever stop plate	7-11	7-32
Speed adjusting wheel friction washer spring	7-10	7-32
Synchronous motor	.....	.....
End thrust spring tension	.....	7-65
Starting switch spring tension	.....	7-65
Reeling Machine RL-173/FGC	.....	7-22
Clutch shaft alignment	7-6	7-22
Clutch torque	7-8	7-29
Drive shaft end play	.....	7-22
Drive shaft gear	.....	7-22
Motor position	.....	7-22
Reel core spring	.....	7-29
Stop lever	.....	7-29
Stop lever guide	7-7	7-29
Stop lever spring tension	.....	7-29
Tape lever	.....	7-29
Tape lever spring tension	.....	7-29
Trip lever	.....	7-29
Reperforator	.....	7-37
Automatic tape feed out	.....	7-63
Clutch magnet switch	7-71	7-63
Clutch trip armature bail lever	7-70	7-63
Feed-out clutch detent eccentric	7-70	7-63
Metering intermediate gear	7-72	7-64
Metering tape feed-out adjusting screw	7-72	7-65
Metering tape feed-out switch	7-72	7-65
Metering worm follower stud	7-71	7-64
Tape feed-out clutch teeth	7-69	7-63
Bell hammer eccentric screw	7-68	7-62
Bell hammer post	7-68	7-62
Code bar bell cranks	7-58, 7-59	7-55
Feed-out roller eccentric	7-52, 7-58	7-57
Feed pawl eccentric (final)	7-53, 7-58	7-57
Feed pawl eccentric (preliminary)	7-58	7-55
Feed pawl spring tension	7-53	7-55
Feed roll bearing	7-55	7-54
Feed roll detent (final)	7-57	7-57
Feed roll detent lever spring tension	7-60	7-59
Feed roll detent (preliminary)	7-53, 7-57	7-55
Figures pull bar	7-63	7-60
Function bar spring brackets	7-38	7-46
Holding magnet selector mechanism	.....	7-39
Armature lever pivot screw	7-26, 7-27	7-39
Armature lever spring	7-27	7-43
Locking lever spring tension	7-29	7-41
Locking wedge	7-29	7-41
Selector arm bracket	7-28	7-39
Selector arm operating screw	7-32	7-43
Selector arm pivot screws	7-26, 7-27	7-39
Selector arm spring	7-33	7-43
Selector arm stop detent	7-30	7-42
Selector arm stop detent spring tension	7-30	7-42
Selector lever spring tension	7-29	7-42
Selector magnet	7-27	7-39
Selector magnet bracket	7-27	7-42
Selector magnet bracket position adjusting arm	7-31	7-42
Selector stop arm and stop lever engagement positioning link	7-36	7-45
Stop lever eccentric screw	7-34	7-44
Stop lever spring tension	7-34, 7-35, 7-37	7-44
Tape feed-out lever	7-37	7-46
Trip latch spring compression	7-34	7-44
Trip-off screw	7-34, 7-37	7-46
Left function pull bar spring bracket	7-50	7-52
Left ribbon reverse arm shaft	7-44	7-49
Main bail adjusting screw (final)	7-59	7-56
Main bail adjusting screw (preliminary)	7-25	6-59 7-48
Main bail cam clutch torque	7-64	7-61
Main bail guide	7-40	7-47
Main bail spring	7-25	7-60
Main shaft	7-25	7-38

SUBJECT	FIGURE OR TABLE	PAGE
Main shaft clutch spring tension	7-23	7-37
Main shaft clutch throwout lever	7-25	7-38
Main shaft clutch throwout lever spring tension	7-25	7-38
Motor gears	.....	7-38
Platen shift spring tension	7-55, 7-61	7-60
Platen yield spring tension	7-55	7-60
Pull bar guard	7-51	7-52
Pull bar guide	7-41	7-47
Pull bar lockout lever	7-66, 7-67	7-62
Pull bar spring tension	7-39	7-46
Punch arm casting	7-52	7-53
Punch arm spring tension	7-58	7-60
Punch bail bearing	7-53, 7-54	7-53
Punch bail front pivot bearing plate	7-53, 7-54	7-54
Punch bail link	7-25, 7-58	7-56
Punch bail upstop screw	7-58	7-57
Punch bell crank spring tension	7-58	7-60
Punch selector finger backstop	7-58	7-56
Rangefinder orientation	.....	7-65
Ribbon check pawl	7-49	7-51
Ribbon check pawl spring	7-49	7-51
Ribbon feed lever spring tension	7-48	7-51
Ribbon feed pawl	7-49	7-51
Ribbon feed pawl spring	7-49	7-52
Ribbon feed shaft detent plunger spring compression	7-47	7-50
Ribbon feed shaft safety spring compression	7-47	7-50
Ribbon guide	7-55	7-59
Ribbon reverse pawl link	7-45	7-50
Ribbon spool cups	7-42	7-48
Ribbon spool shaft brackets	7-43	7-48
Ribbon spool shaft compression spring	7-43	7-48
Ribbon spool shaft gears	7-43	7-48
Ribbon spool shaft slots	.....	7-49
Right and left ribbon reverse pawls spring tension	7-46	7-52
Right function pull bar spring bracket	7-50	7-52
Right ribbon reverse arm shaft	7-44	7-49
Selector clutch	7-65	7-61
Selector separator plates	7-24	7-37
Shift bell crank	7-61	7-59
Shift bell crank guide	7-61, 7-62	7-59
Shift lever spring tension	7-63	7-60
Shift rocker	7-25, 7-62	7-59
Shift rocker lever post	7-62	7-59
Shift rocker post	7-61	7-58
Signal bell	.....	7-62
Tape guide spring	7-55	7-60
Tape stripper plate	7-53	7-58
Tape tension lever spring	7-60	7-58
Tape tension lever stud	7-56	7-54
Vertical lever pilot screw	7-58	7-56
Time Stamp MX-1527/U	7-14	7-33
Date cam wiper arm	7-19	7-35
Date push pawl	7-15	7-33
Date throw lever spring tension	7-15	7-36
Drive pawl stop pin	7-20	7-36
Hour and month feed tooth	7-16	7-33
Hour and month push pawl	7-15	7-33
Hour change	7-22	7-36
Hour throw lever spring tension	7-15	7-36
Lock lever	7-17, 7-18	7-33
Minute drive pawl	7-20	7-36
Month cam wiper arm	7-15	7-35
Month throw lever spring tension	7-15	7-35
Print transfer relay contacts	7-21	7-36
Ribbon feed and ribbon reverse	7-22	7-37
Variable month change lever	7-19	7-36
Assembling and connecting the equipment	.....	3-12
Assembly	.....	7-108
Distributor-Transmitters	.....	7-111
Distributor-Transmitter Base (Message)	7-174, 7-175, 7-176, 7-177	7-111
Distributor-Transmitter Base (Numbering)	.....	7-111
Motors	.....	7-108
Governed motor	.....	7-108
Armature and bearings	7-149	7-108

SUBJECT	FIGURE OR TABLE	PAGE
Brushes	7-149	7-108
Filter assembly	7-150	7-109
Governor	7-150	7-109
Inspection	.....	7-109
Resistor and capacitor	7-151	7-109
Speed adjusting bracket and brushes	7-150	7-109
Synchronous motor	.....	7-109
Bearings and switch	7-153	7-109
Reperforators	.....	7-111
Time Stamp	7-183, 7-184, 7-185, 7-186	7-110
Automatic stop, cycle of operation	.....	2-47
Automatic tape feed out, Reperforator	.....	2-40
Auxiliary equipment	.....	3-25
B		
Basic principles of Teletypewriter Sets AN/FGC-38, AN/FGC-38X, and AN/FGC-39	1-1	1-1
General	.....	1-1
Monitor group	.....	1-1
Receiver group	.....	1-1
Transmitter group	.....	1-1
C		
Cabinet, Electrical Equipment CY-1522/FGC (Monitoring)	1-4	1-5
Cabinet, Electrical Equipment CY-1523/FGC (Receiving)	1-2	1-5
Cabinet, Electrical Equipment CY-1524/FGC (Transmitting)	1-3	1-5
Cabinet installation	3-3	3-3
Cable assemblies CX-2648/FGC, CX-2649/FGC, and CX-2650/FGC	1-16	1-11
Capabilities and limitations	.....	4-5
Monitor group	.....	4-5
Receiver group	.....	4-5
Transmitter group	.....	4-5
Charts		
Lubrication		
Distributor-Transmitter	6-17, 6-18, 6-19, 6-20, 6-21	6-37, 6-39, 6-41, 6-43, 6-45
Governed motor lubrication data	6-6	6-15
Monitor cabinet lubrication points	6-3	6-9
Mounting base (message) lubrication data	6-9	6-21
Mounting base (numbering) lubrication data	6-7, 6-8	6-17, 6-18
Receiver cabinet lubrication points	6-1	6-5
Reeling machine lubrication points	6-4	6-11
Reperforator lubrication data	6-10, 6-11, 6-12, 6-13, 6-14, 6-15, 6-16	6-23, 6-25, 6-27, 6-29, 6-31, 6-33, 6-35
Synchronous motor lubrication data	6-5	6-13
Time stamp	6-22, 6-23	6-47, 6-49
Transmitter cabinet lubrication points	6-2	6-7
Resistance and voltage		
Control Panel SB-357/FGC resistance chart (K-106) removed	7-15	7-14
Control Panel SB-357/FGC voltage chart	7-14	7-14
Control Panel SB-358/FGC resistance chart (K-201) removed	7-17	7-15
Control Panel SB-358/FGC voltage chart	7-16	7-14
Power supply adjustment data	7-20	7-16
Power supply dummy loads	7-19	7-15
Power supply PP-987/U voltage chart	7-18	7-15
Routine check	5-1, 5-2, 5-3	5-0
Routine maintenance check	6-1	6-3
Trouble shooting		
Control Panel SB-357/FGC	7-6	7-6
Control Panel SB-358/FGC	7-7	7-7
DC power supply	7-5	7-5
Distributor-Transmitter	7-13	7-13
Distributor-Transmitter base	7-12	7-12
Governed motor	7-9	7-8
Monitor group	7-4	7-4
Receiver group	7-2	7-2
Reeling machine	7-8	7-8
Reperforator	7-10	7-9
System	7-1	7-1
Time stamp	7-11	7-11
Transmitter group	7-3	7-3

SUBJECT	FIGURE OR TABLE	PAGE
Circuit analysis	.....	2-5
Distributor-Transmitter group	2-7, 2-8, 2-9, 2-10, 2-11, 2-12, 2-13, 2-14, 2-15, 2-16, 2-17, 2-18, 2-2	2-7
Power supply	2-19	2-23
Receiver group	2-3, 2-4, 2-5, 2-6, 2-1	2-5
Time stamp	2-22, 2-23	2-26
Code perforations, reperforator	.....	2-37
Component identification and exploded views	7-133 to 7-193	7-109
Control Panel SB-357/FGC	1-14	1-11
Control Panel SB-358/FGC	1-15	1-11
Cycle of operation	.....	2-43
Distributor-Transmitter (message)	.....	2-43
Automatic stop	2-59, 2-60	2-47
Clutch	2-47	2-44
Clutch assembly	2-48, 2-49	2-44
Clutch magnet	.....	2-43
Clutch trip magnet assembly	2-47	2-44
Manual stop	.....	2-48
Stop mechanism	2-57, 2-58	2-47
Tape feed	.....	2-46
Tape sensing mechanism	.....	2-44
Transmitting cam sleeve	2-46	2-43
Distributor-Transmitter (numbering)	.....	2-49
Clutch magnet	.....	2-49
Letters sensing mechanism	.....	2-49
Governed motor	.....	2-24
Reeling machine	.....	2-24
Reperforator	.....	2-31
Automatic tape feed out	2-43, 2-44, 2-45	2-40
Code perforations	.....	2-37
Main shaft	2-31	2-31
Manual tape feed-out	.....	2-42
Manual tape feed-out lever	.....	2-40
Perforating mechanism	2-36, 2-37	2-36
Printing mechanism	2-35	2-35
Printing of a selected character	2-36	2-36
Rangefinder mechanism	2-32	2-32
Ribbon mechanism	2-39, 2-40	2-38
Selecting, printing, and perforating operations	.....	2-37
Selection of a character	2-32	2-34
Selector mechanism	2-33, 2-34	2-33
Signal bell mechanism	2-42	2-40
Spacing mechanism	2-37, 2-38	2-38
Upper and lower case shift mechanism	2-41	2-39
Time stamp	.....	2-26
Drive mechanism	2-24	2-27
Ribbon feed mechanism	2-30	2-30
Typewheels	2-25, 2-26, 2-27, 2-29	2-28

D

Deleting a number	.....	4-10
Description		
Cable Assemblies CX-2648/FGC, CX-2649/FGC, and CX-2650/FGC	1-16	1-11
Control Panel SB-357/FGC	1-14	1-11
Control Panel SB-358/FGC	1-15	1-11
Distributor-Transmitter base (message)	1-9	1-8
Distributor-Transmitter base (Numbering)	1-8	1-8
Distributor-Transmitter (message)	1-6	1-6
Distributor-Transmitter (numbering)	1-7	1-7
Motor driven tape reeling machine	1-11	1-9
Power Supply PP-987/U	1-13	1-11
Receiver group	2-2	2-0
Reeling machine	.....	2-3
Reperforators (monitoring)	1-10	1-9
Reperforators (receiving)	1-5	1-5
Teletypewriter Sets AN/FGC-38, AN/FGC-38X, and AN/FGC-39	.....	1-5

SUBJECT	FIGURE OR TABLE	PAGE
Cabinet, Electrical Equipment CY-1523/FGC (Receiving)	1-2	1-5
Cabinet, Electrical Equipment CY-1524/FGC (Transmitting)	1-3	1-5
Cabinet, Electrical Equipment CY-1522/FGC (Monitoring)	1-4	1-5
Distributor-Transmitter bases	.....	1-8
Message	1-9	1-8
Numbering	1-8	1-8
Distributor-Transmitter units	.....	1-6
Message	1-6	1-6
Numbering	1-7	1-7
Time stamp	1-12	1-10
Transmitter group	.....	2-3
Difference between units	.....	.....
Message distributor-transmitter	.....	1-7
Message distributor-transmitter base	.....	1-9
Monitoring reperforator	.....	1-9
Numbering distributor-transmitter	.....	1-8
Numbering distributor-transmitter base	.....	1-8
Receiving reperforators	.....	1-6
Disassembly		
Distributor-transmitters	.....	7-108
Bottom plate	7-170	7-108
Contact bracket	7-172	7-108
Governed motor	7-149, 7-150, 7-151, 7-155	7-102
Message base	7-174, 7-175, 7-176, 7-177	7-108
Numbering base	.....	7-107
Bearing brackets and bearings	7-175, 7-176	7-108
Covers	7-178	7-107
Doors and rewind reels	7-178	7-107
Feed pawl and ratchet	7-175	7-108
Main shaft	7-176	7-108
Pivot arm	7-175	7-108
Slip connections	7-174	7-108
Tape reels	7-175	7-108
Tape winding assembly	7-176, 7-177	7-107
Reperforators	.....	7-106
Code bars	7-158	7-107
Main shaft	7-161, 7-164	7-106
Perforating mechanism	7-160, 7-163, 7-164	7-106
Platen mechanism	7-163	7-107
Punch block	7-163, 7-165	7-106
Rangefinder mechanism	7-166	7-106
Ribbon spool bracket	7-160	7-107
Selector levers, swords, and T levers	7-166	7-107
Selector unit	7-161, 7-167	7-106
Type bar	7-156, 7-157	7-107
Type basket	7-155, 7-156, 7-157, 7-158, 7-160, 7-164	7-106
Synchronous motor	7-153	7-104
Time stamp	7-140, 7-183, 7-184, 7-185, 7-186	7-104
Distributor-transmitters adjustments	.....	7-65
Distributor-transmitter base adjustments	.....	7-80
Distributor-transmitter group circuit analysis	2-7, 2-2	2-7
Distributor-transmitter (message) mechanical analysis	.....	2-43
Distributor-transmitter (numbering) mechanical analysis	.....	2-49
Distributor-transmitter speed conversion	.....	3-18

E

Electrical adjustments	.....	7-15
Electrical characteristics	.....	1-16
Electrical connections, reperforator	.....	2-42
Electrical definitions	.....	7-84
Hold	.....	7-84
Non-operate	.....	7-84
Operate	.....	7-84
Release	.....	7-84
Soak	.....	7-84
Electrical Equipment Cabinet CY-1522/FGC adjustment	.....	7-21
Electrical Equipment Cabinet CY-1523/FGC adjustment	.....	7-18